HANSUNG

Eigenprodukte

JIG GRINDING ATTACHMENT & CAM GRINDER

Koordinatenschleifköpfe
Sonderausführungen für Luft- und Raumfahrt
Kurvenschleifkopf
Hubtisch
Schnellaufspindel

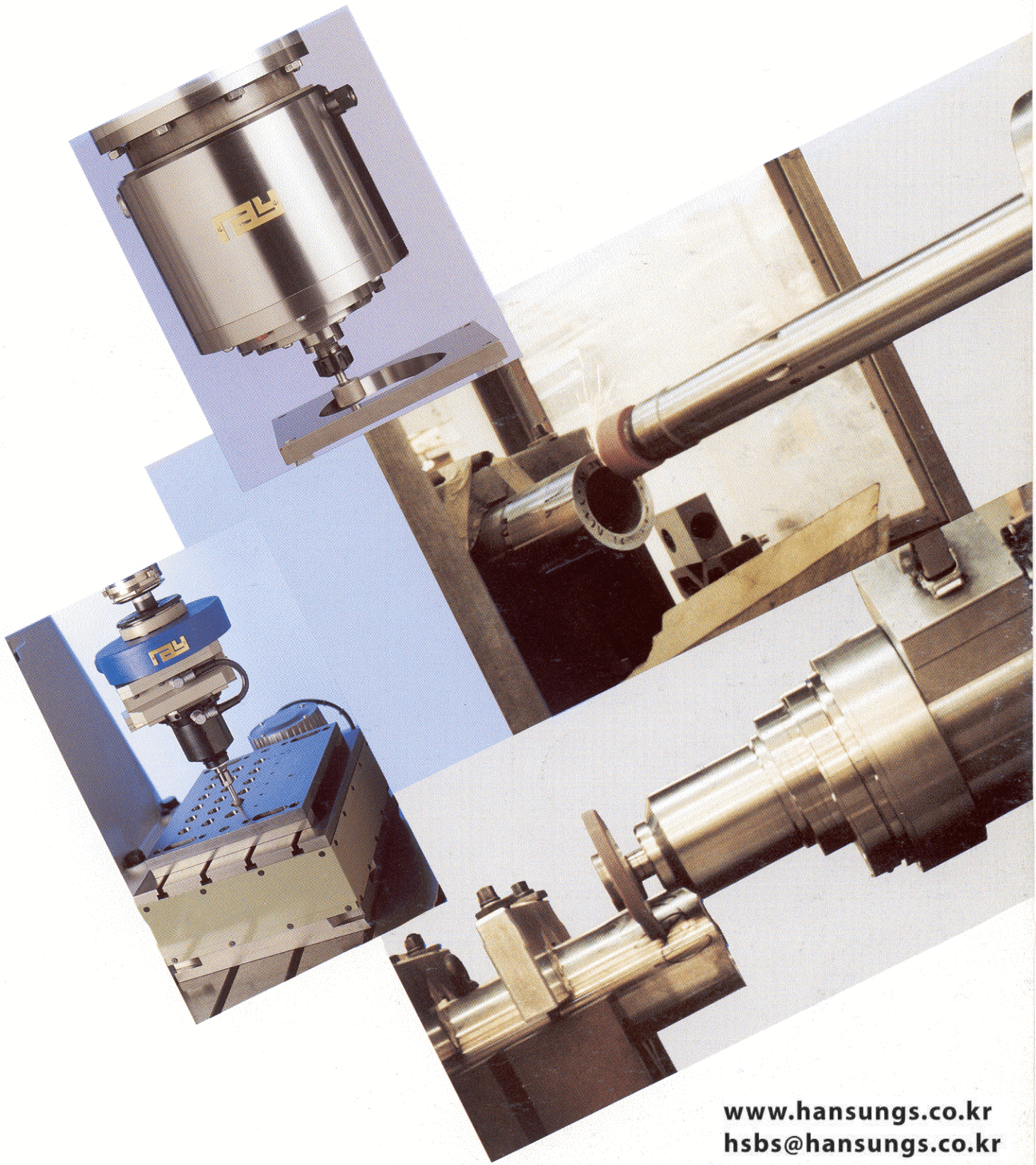

www.hansungs.co.kr
hsbs@hansungs.co.kr

RAY KSK 1000

Bores, surfaces and slots the flexible accessory to solve nearly all your precision grinding problems.



The **RAY coordinate grinding head KSK 1000** is made of high quality aluminium alloy and weighs together with spindle R50 only approx. 9 kg (20 lbs.). The sturdy and high precision unit can be mounted to almost any spindle head of vertical or horizontal NC- and CNC-controlled machine tools by various interchangeable fixing cones. Thus, application possibilities are opened to the user which normally can only be realised with expensive special machines.

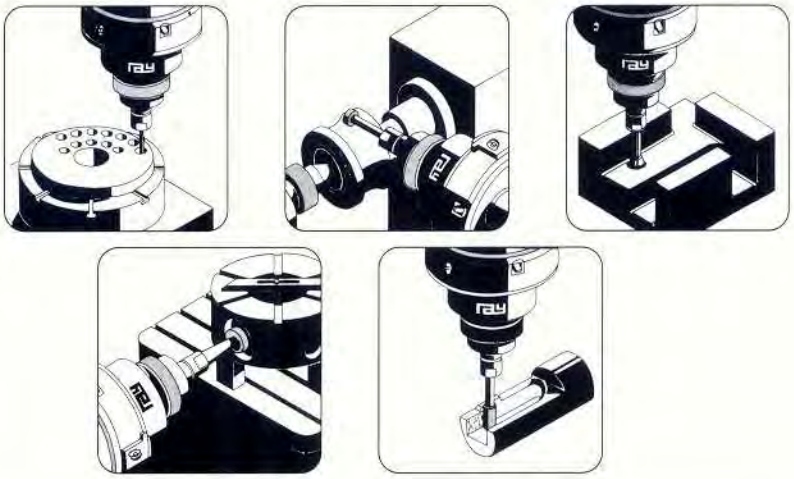

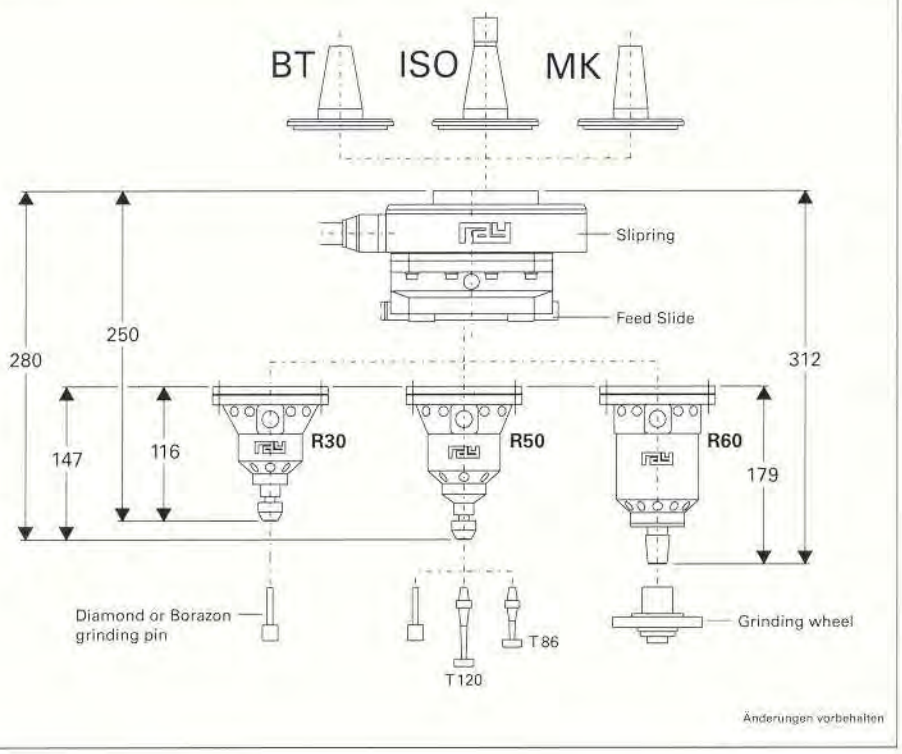

Bore diameter	max. 230 mm (9")
Bore depth	max. 120 mm (5")
Accuracy	0.001 mm (0.00004")
Weight	approx. 9 kg (20 lbs.)

Spindle R30
25 000–100 000 r.p.m.
600 W
Collets ∅ 3/4 mm

Weight 1.8 kg

Spindle R50
10 000–40 000 r.p.m.
1 200 W
Collets ∅ 3/4/6/8 mm
Ø 10 mm
Weight 2.6 kg

Spindle R60
7 000–15 000 r.p.m.
1 500 W
Holding device for grinding wheel flange
Collets on request
Weight 4.5 kg

Coordinate Grinding Head

RAY KSK 4000

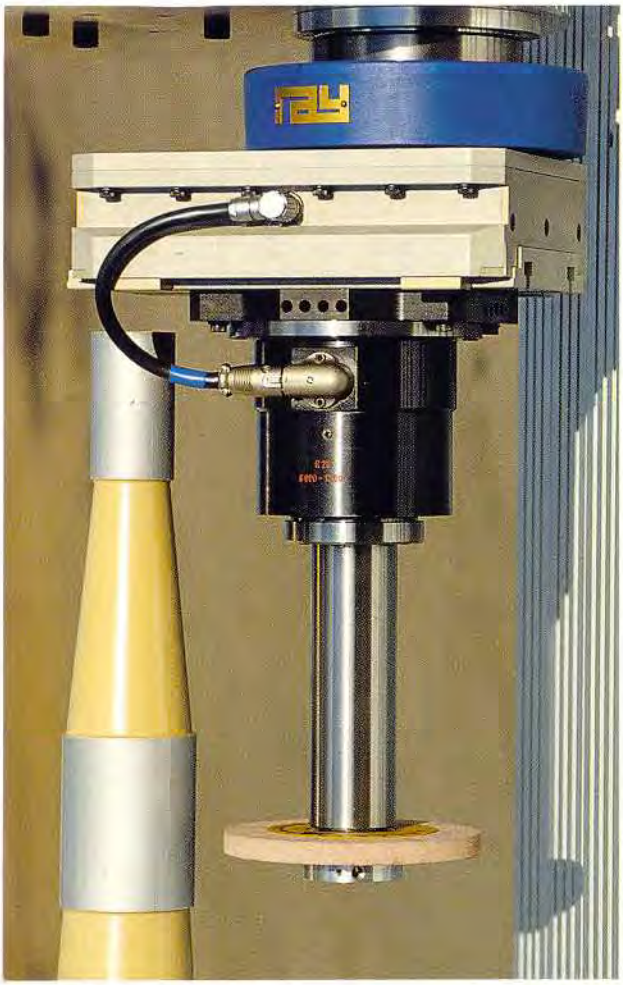

Capacity
Bore diameter maximum 310 mm
Bore depth maximum 250 mm

Concentricity
0,001 mm

High-frequency spindles
R 250 (6 000–15 000 r.p.m)
R 170 (15 000–40 000 r.p.m)

Weight
approx. 31 kg

To use on jig borer, horizontal boring machines and machining centers.

- Completely electronically controlled by means of a mobile switch board.
- High frequency spindles exchangeable and movable.
- Strong construction, no maintenance.
- Fixing cone interchangeable.

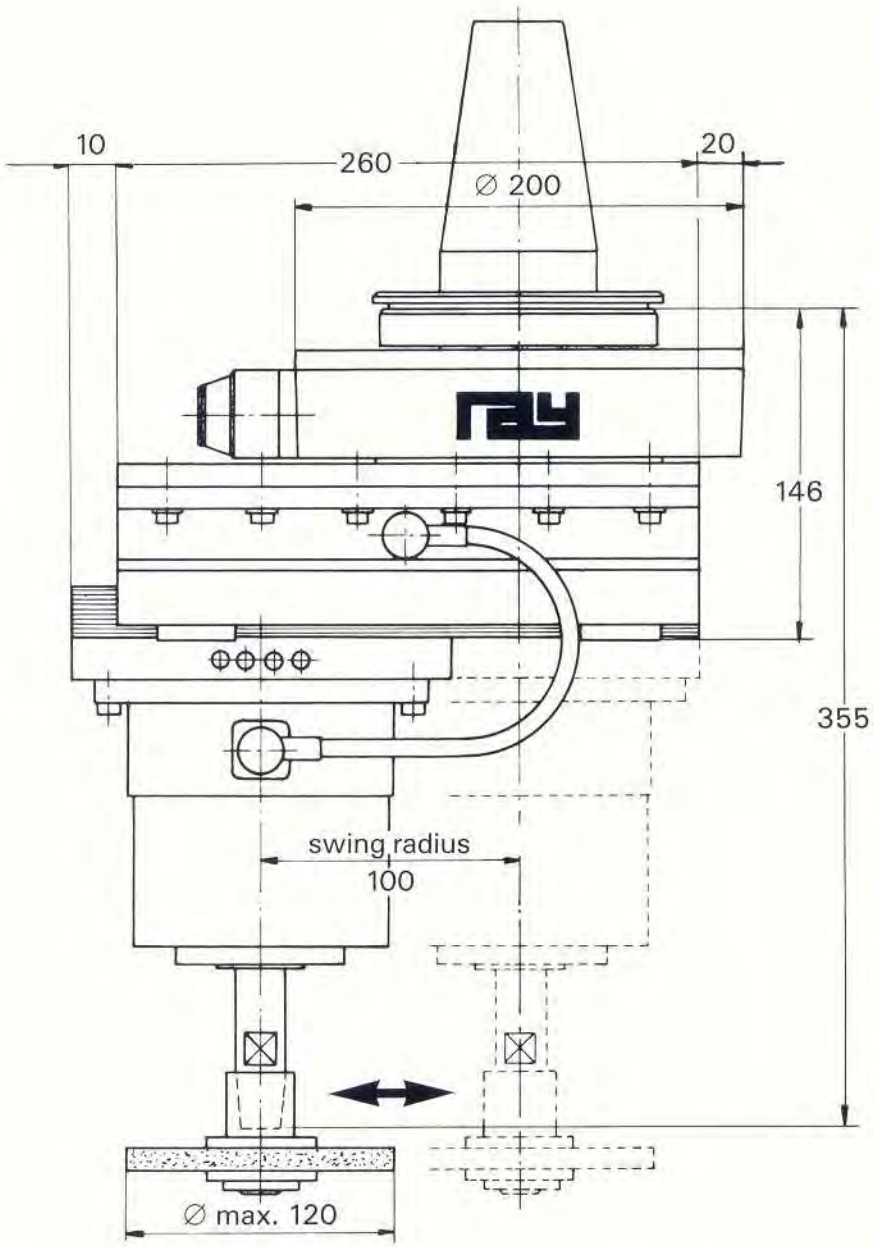

Spindle R 250

for very big bores

Power	1 000 Watt
Speed	6 000–15 000 r.p.m
Wheel flange	∅ 20 mm
Prolonging device	T 150 (150 mm)
Collets	∅ 1–10 mm on request
Weight	approx. 8 kg

Spindle R 170

for standard processing

Power	500 Watt
Speed	15 000–40 000 r.p.m
Collets	∅ 3/4/6/8 mm
Prolonging device	T 120 (120 mm) T 86 (86 mm)
Weight	approx. 4 kg

NEW RAY CAM - GRINDER

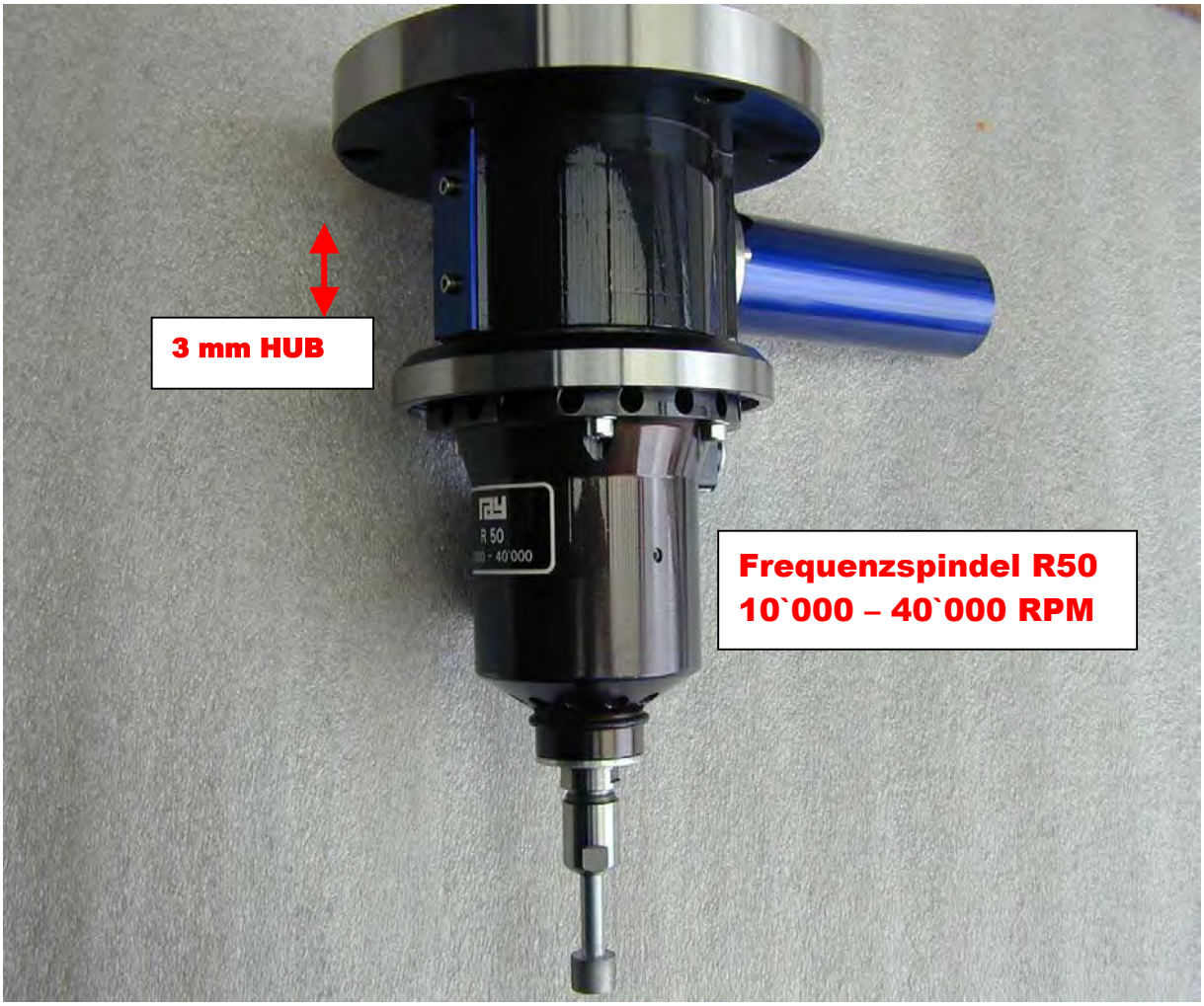

Hub: 3mm fest
Geschw: max 350 H/min
Geeignet für: R50
R50U(Wassergekühlt)
R3
R30W(Wassergekühlt)

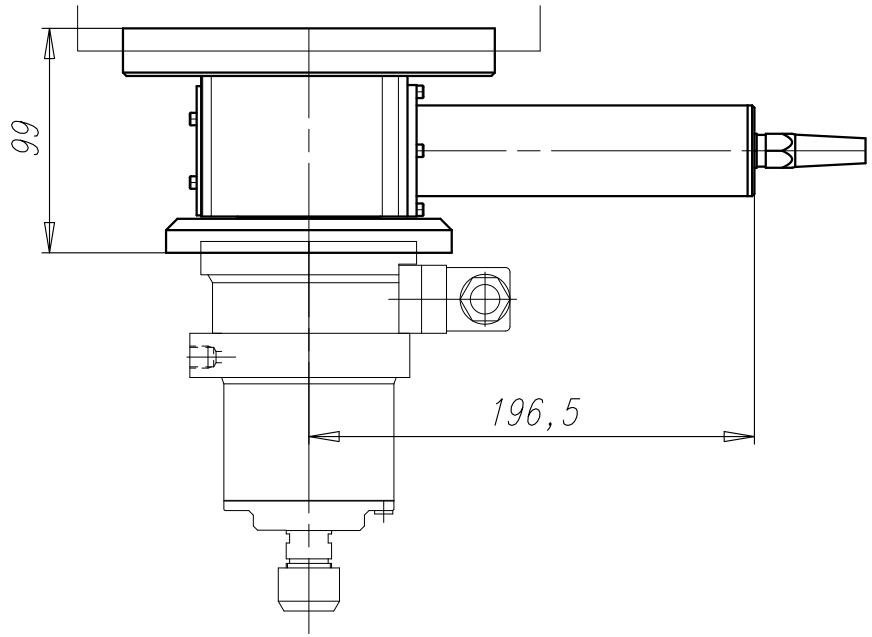

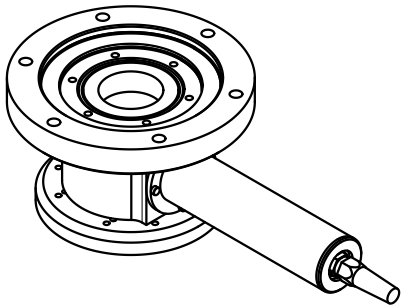

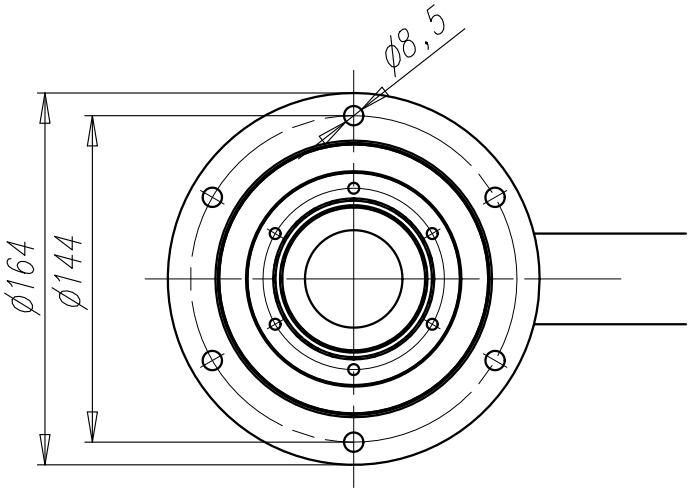

Diese Zeichnung ist unser geistiges Eigentum.
Sie darf weder kopiert, vervielfältigt noch
Drittpersonen zugänglich gemacht werden.

Bemerkungen: ...

	Gezeichnet durch: Shr	Gewicht: inkl. Spindel R50U 9,1 Kg
Massstab: . / .	Datum: 13.04.04	

Titel
CAM Grinder
Massblatt

WERKZEUG- UND MASCHINENFABRIK
RAY AG
Telefon 01/ 940 55 66

Machine:	Zusammenstellung sehe Nr: . Z	Zeichnungs Nr: SPR 828


R 50V


No: 2501
R 50U
10'000 - 40'000



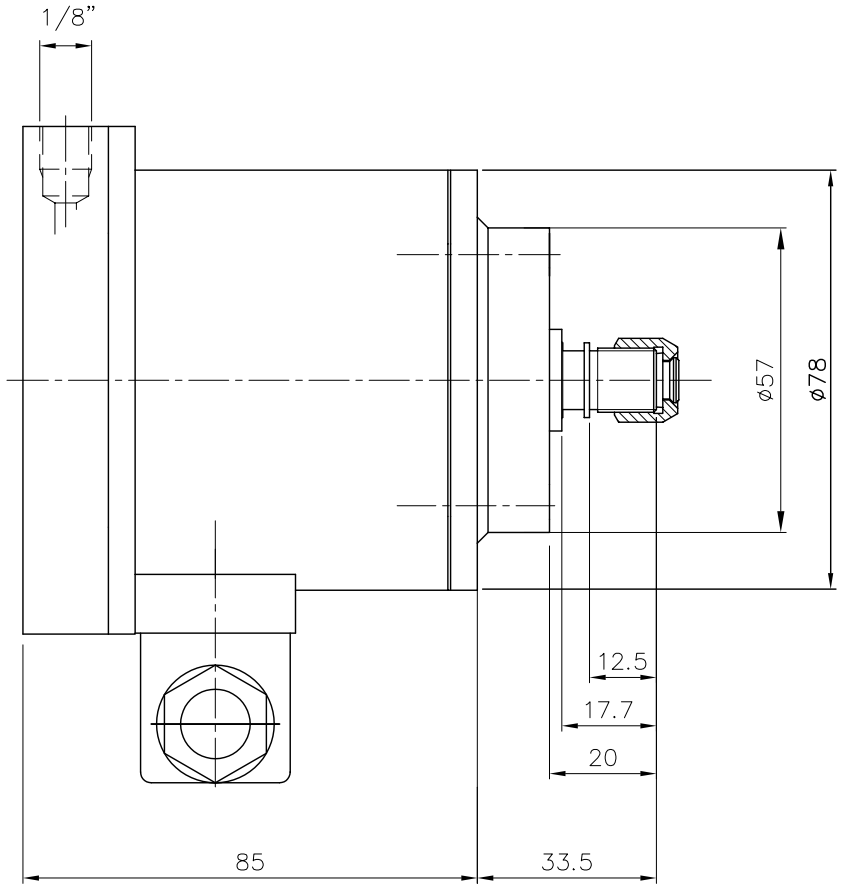

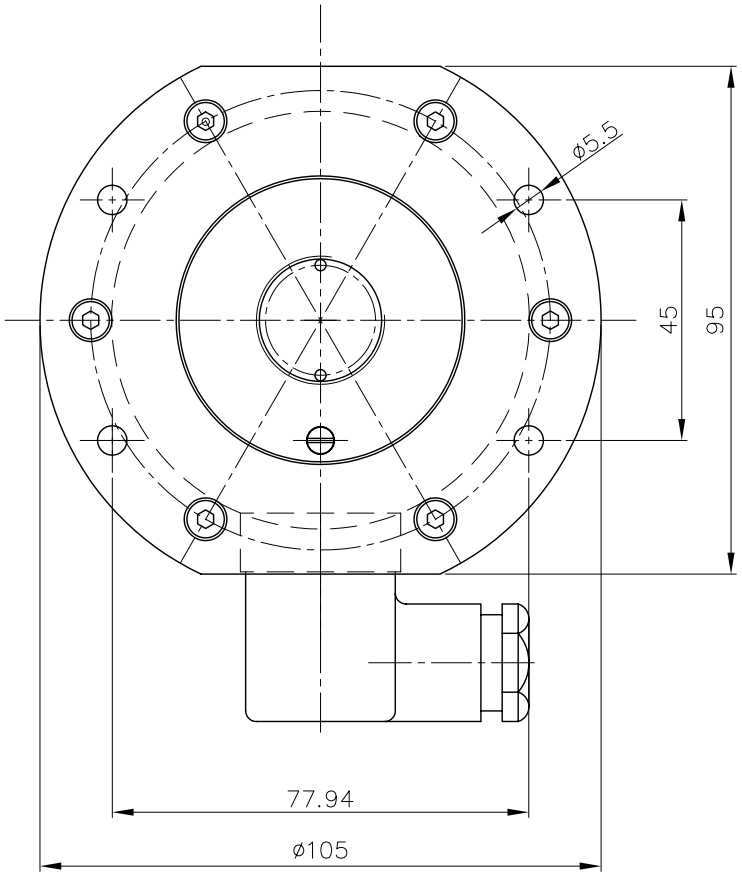

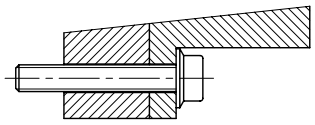

Drehzahl 25,000~ 80'000 rpm
Vorspannung Lager 15N

max Spannzange–ø: 6,00 mm
1/4"

Schnellfrequenzspindel R 30 W (D10)	2:1	01.02.99	Shr
Werkzeug– und Maschinefabrik Ray AG Telefon (01) 905 70 60		SPR 678–m	

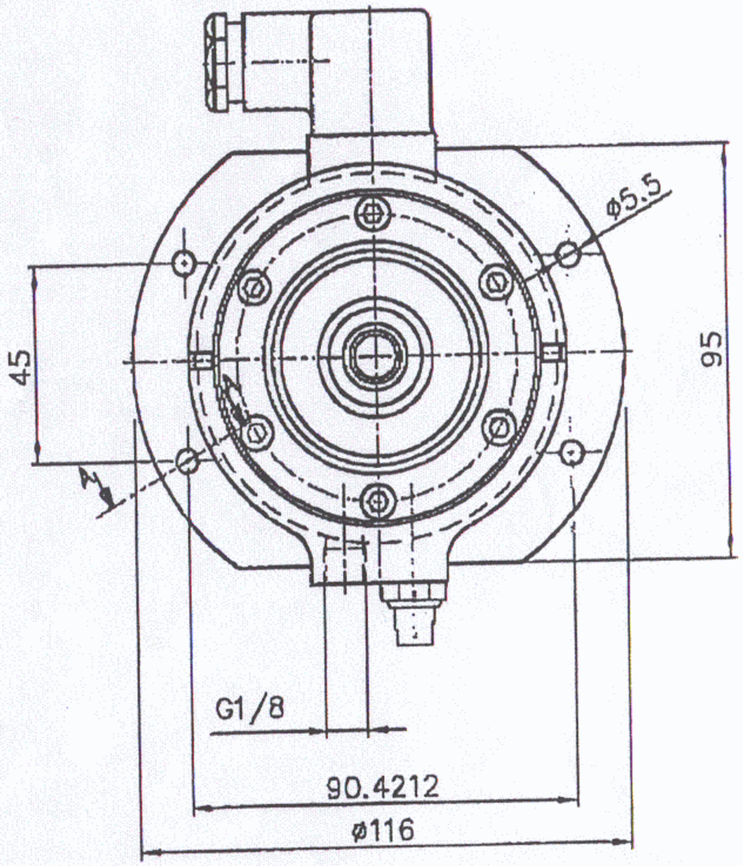

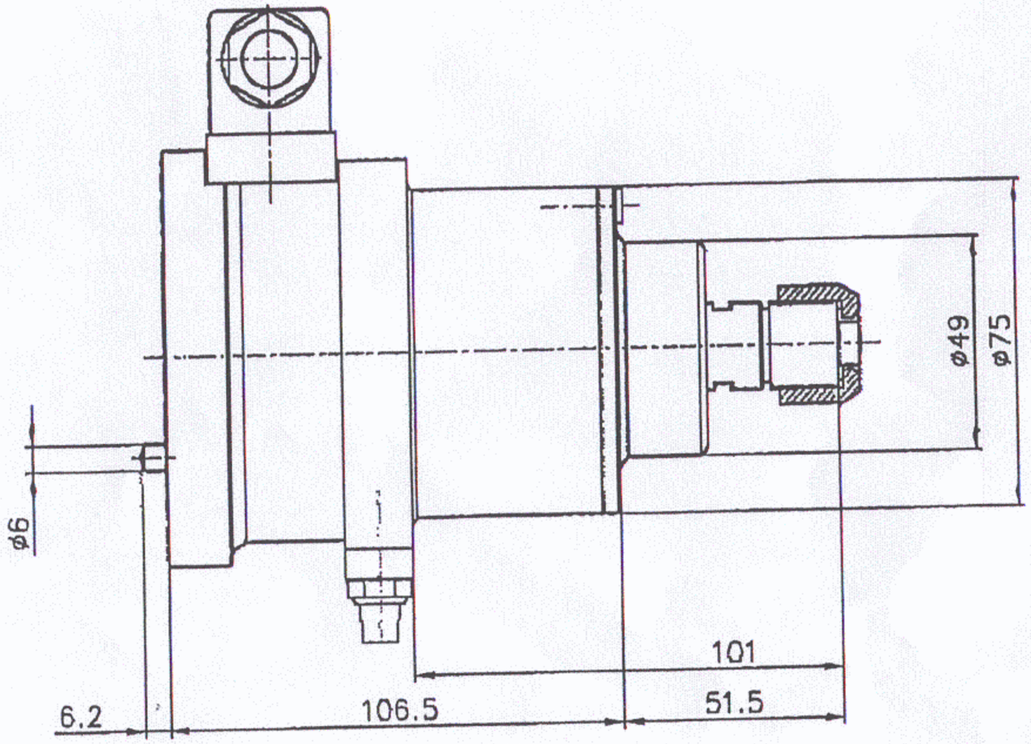

A—A (2:1)

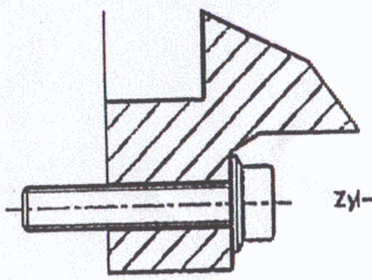

Zyl-Schr mit Flansch M5x25 BN1392

Collet : D16/max.Ø10.0 mm

Drehzahl	10000–40000 rpm
Vorspannung für Lager HSS7002 und HCS7002	75 N

A2			
	Schnellfrequenzspindel R 50 U	1:1 (2:1)	08.05.95 SHR
	Werkzeug- und Maschinefabrik Ray AG Telefon (01) 940 55 69	SPR 720	

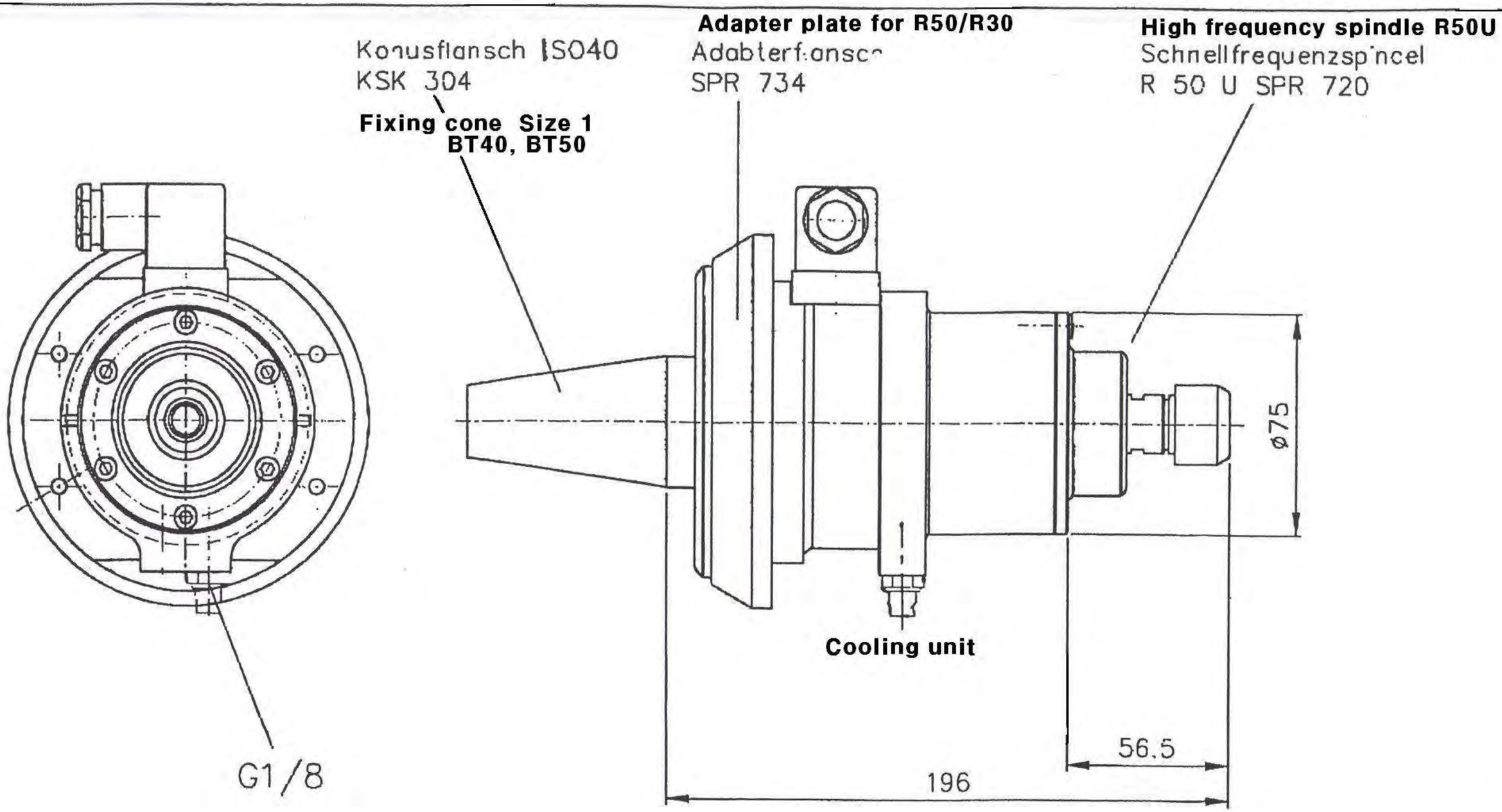

COLLET : D16/max. Ø10.0 mm

Revolution : 10,000 ~ 40,000 rpm

Vorspannung für Lager HSS7002 und HCS7002 **75 N**

A2						
	Schnellfrequenzspindel **R50U** mit Kon. Flansch	1:1 (2:1)				
	Werkzeug- und Maschinenfabrik Ray AG Telefon (01) 840 55 46	**SPR 735**				



Cam grinding head KUS 2500



Cam grinding head KUS 2500



Coordinate grinding head KSK 4000

RAY solves the problems of

internal grinding **surface grinding**
cam grinding **slot grinding**
external grinding

RAY Ltd. offers the coordinate grinding head in three sizes, the small head with a weight of 9 kg, the bigger one with 265 kg. Apart from coordinate grinding heads, we also manufacture high-frequency spindles for speeds of 6000 to 100000 r.p.m. with a power range of 250 to 1500 Watt.

For the working of cams, we have developed the cam grinding head. Where this head cannot be employed any more, there is the possibility of using the oscillating apparatus.

Ask for the corresponding leaflets, or even better ask your agent for a demonstration without obligation.



HANSUNG

www.hansungs.co.kr
hsbs@hansungs.co.kr

(주)한성GT 435-831 경기도 군포시 고래들길 48번지
TEL. 031-428-8200 FAX. 031-455-1818
공장 경기도 화성시 마도면 쌍송리 마도공단로 5길 53

창원사무소 TEL. 055-296-1634 FAX. 055-274-1654
부산사무소 TEL. 051-319-4525 FAX. 051-319-4527
광주사무소 TEL. 062-524-1364 FAX. 062-524-1365
익산사무소 TEL. 063-833-2278 FAX. 063-833-2279
대구사무소 TEL. 053-551-0660 FAX. 053-551-0661
울산사무소 TEL. 052-257-0661 FAX. 052-257-0689

RAY Ltd. Tool and Machine Factory
Stationsstrasse 77 Phone +41 (0)1 940 55 66 www.rayag.com
CH-8606 Nänikon ZH Fax +41 (0)1 941 14 53 info@rayag.com

RAY KSK 1000

Bores, surfaces and slots the flexible accessory to solve nearly all your precision grinding problems.



The **RAY coordinate grinding head KSK 1000** is made of high quality aluminium alloy and weighs together with spindle R50 only approx. 9 kg (20 lbs.). The sturdy and high precision unit can be mounted to almost any spindle head of vertical or horizontal NC- and CNC-controlled machine tools by various interchangeable fixing cones. Thus, application possibilities are opened to the user which normally can only be realised with expensive special machines.

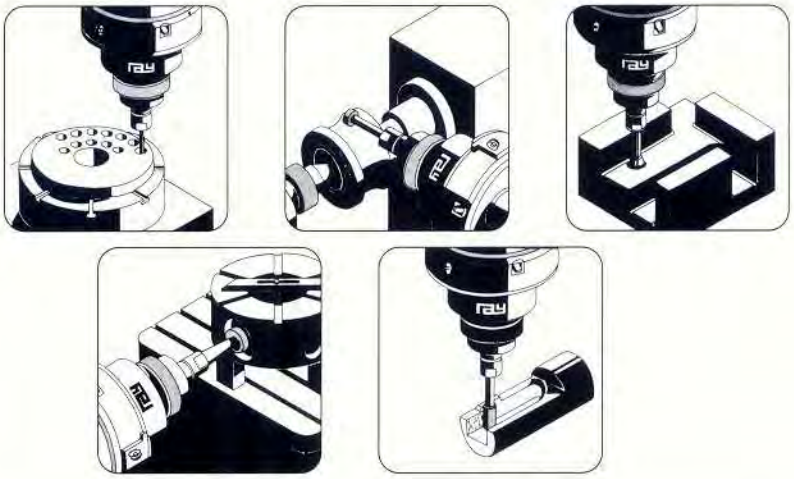

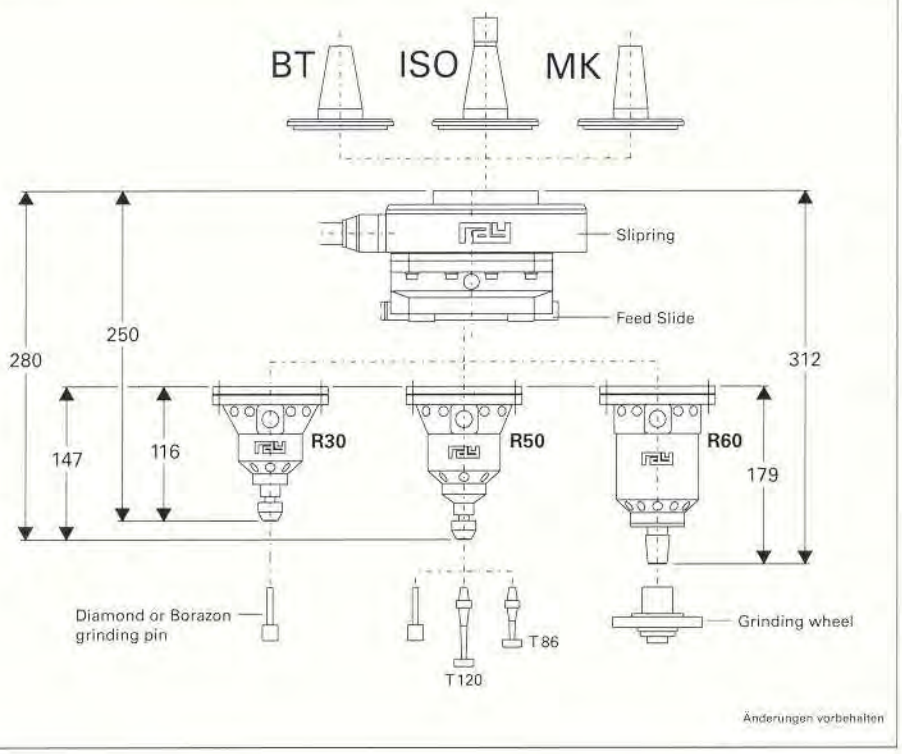

Bore diameter	max. 230 mm (9")
Bore depth	max. 120 mm (5")
Accuracy	0.001 mm (0.00004")
Weight	approx. 9 kg (20 lbs.)

Spindle R30
25 000–100 000 r.p.m.
600 W
Collets ∅ 3/4 mm

Weight 1.8 kg

Spindle R50
10 000–40 000 r.p.m.
1 200 W
Collets ∅ 3/4/6/8 mm
Ø 10 mm
Weight 2.6 kg

Spindle R60
7 000–15 000 r.p.m.
1 500 W
Holding device for grinding wheel flange
Collets on request
Weight 4.5 kg



Cam grinding head KUS 2500



Cam grinding head KUS 2500



Coordinate grinding head KSK 4000

RAY solves the problems of

internal grinding **surface grinding**
cam grinding **slot grinding**
external grinding

RAY Ltd. offers the coordinate grinding head in three sizes, the small head with a weight of 9 kg, the bigger one with 265 kg. Apart from coordinate grinding heads, we also manufacture high-frequency spindles for speeds of 6000 to 100000 r.p.m. with a power range of 250 to 1500 Watt.

For the working of cams, we have developed the cam grinding head. Where this head cannot be employed any more, there is the possibility of using the oscillating apparatus.

Ask for the corresponding leaflets, or even better ask your agent for a demonstration without obligation.

(주)한 성 GT

www.hansungs.co.kr
hsbs@hansungs.co.kr
본사 : T)031-428-8200
F)031-455-1818
대구 : T)053-551-0660
F)053-551-0661
창원 : T)055-296-1634
F)055-296-1654
광주 : T)062-524-1364
F) 062-524-1365



RAY Ltd. Tool and Machine Factory
Stationsstrasse 77 Phone +41 (0)1 940 55 66 www.rayag.com
CH-8606 Nänikon ZH Fax +41 (0)1 941 14 53 info@rayag.com

Coordinate Grinding Head

RAY KSK 4000

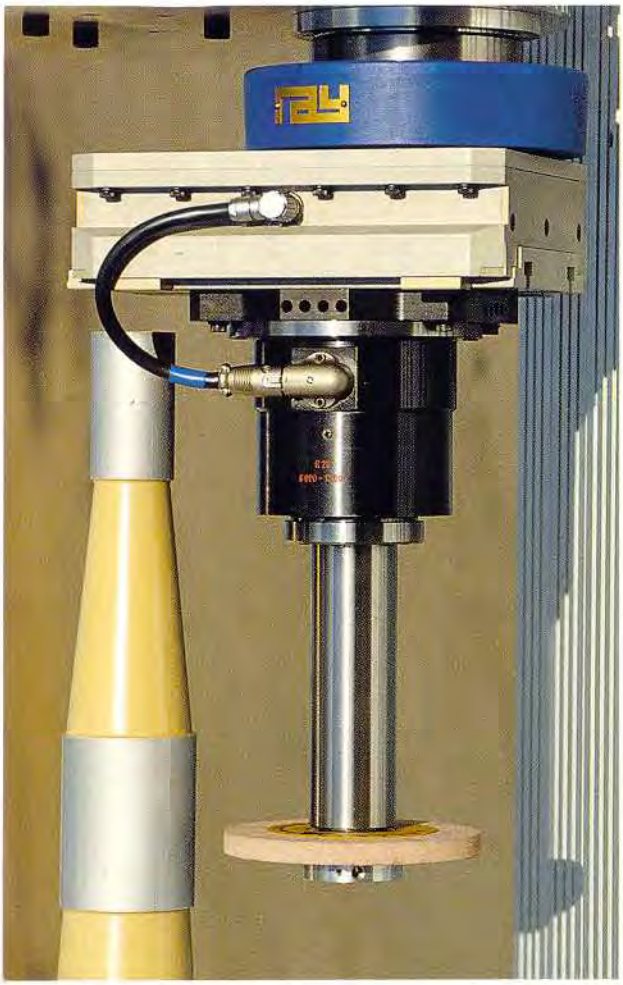

Capacity
Bore diameter maximum 310 mm
Bore depth maximum 250 mm

Concentricity
0,001 mm

High-frequency spindles
R 250 (6 000–15 000 r.p.m)
R 170 (15 000–40 000 r.p.m)

Weight
approx. 31 kg

To use on jig borer, horizontal boring machines and machining centers.

- Completely electronically controlled by means of a mobile switch board.
- High frequency spindles exchangeable and movable.
- Strong construction, no maintenance.
- Fixing cone interchangeable.

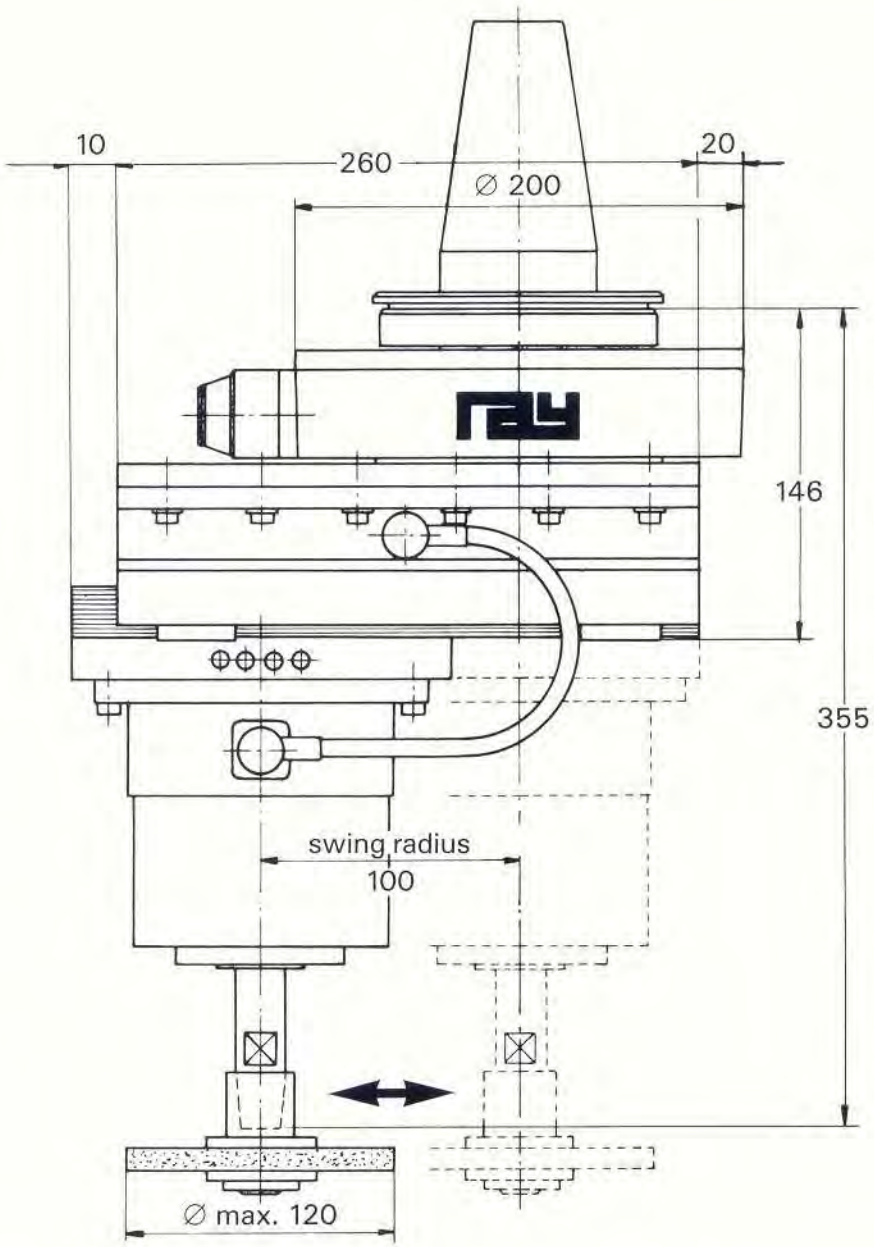

Spindle R 250

for very big bores

Power	1 000 Watt
Speed	6 000–15 000 r.p.m
Wheel flange	∅ 20 mm
Prolonging device	T 150 (150 mm)
Collets	∅ 1–10 mm on request
Weight	approx. 8 kg

Spindle R 170

for standard processing

Power	500 Watt
Speed	15 000–40 000 r.p.m
Collets	∅ 3/4/6/8 mm
Prolonging device	T 120 (120 mm) T 86 (86 mm)
Weight	approx. 4 kg