Ezi-STEP®

Micro Stepping System

- Intergrated Controller
- Position Table
- Micro Stepping
- Sensorless Stall Detection
- Software Damping
- Run / Stop Signal Output

Plus-R MINI



CE

FASTECH

Fast, Accurate, Smooth Motion

Features

1. Network Based Motion Control

A maximum of 16 axis can be operated from a PC through RS-485 communications. All of the Motion conditions are set through the network and saved in Flash ROM as a parameter. Motion Library(DLL) is provided for programming under Windows 2000 / XP / 7 / 8 / 10 / Vista.

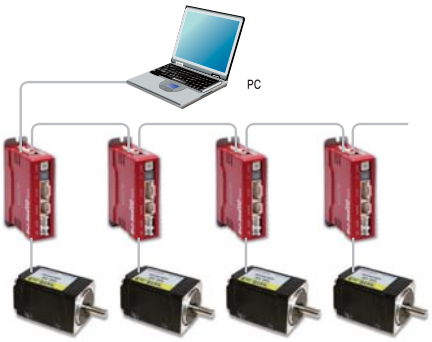

2. Position Table Function

Position Table can be used for motion control by digital input and output signals of host controller. You can operate the motor directly by sending the position table number, start / stop, origin search and other digital input values from a PLC.
The PLC can monitor the In-position, origin search, moving / stop, servo ready and other digital output signals from a drive. A maximum of 64 positioning points can be set from PLC.



3. Microstep and Filtering

High precision Microstep function and Filtering(Patent pending) The high-performance DSP operates at step resolutions of 1.8° up to maximum 0.0072°steps) and Ezi-STEP Plus-R MINI adjusts PWM control signal in every 25μsec, which makes it possible for more precise current control, resulting in high-precision Microstep operation.

4. Sensorless Stall Detection

Detecting the loss-of-synchronization with on-board DSP(Patent pending Ezi-STEP Plus-R MINI can detect the loss-of-synchronization of a stepping motor without the addition of an external sensor.
By monitoring the voltage, current, and back-emf signal, the on-board DSP estimates the current position of a rotor and enables it to detect the loss-of-synchronization(an impossible task for a conventional stepping motor drive), this allows for high-speed operation at 100% torque rating without loss-of-synchronization. *1

*1 : Effective only over 300[rpm]

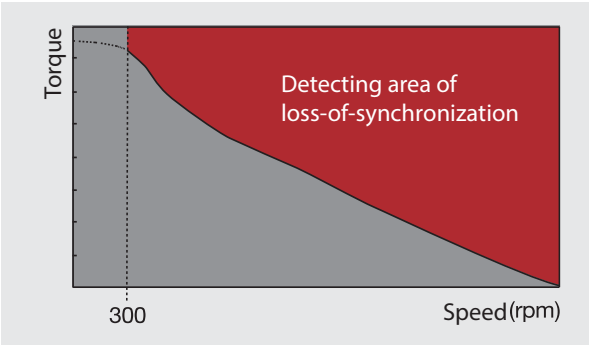

5. Software Damping

Vibration suppression and High-speed operation(Patent pending) Motor vibration is created by magnetic flux variations of the motor, lower current from the drive due to back-emf from the motor at high speeds and lowering of phase voltages from the drive. Ezi-STEP Plus-R MINI drive detects these problems and the DSP adjusts the phase of the current according to the pole position of the motor, drastically suppressing vibration. This allows the smooth operation of the motor at high speeds.

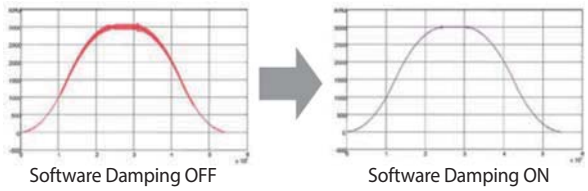

[This is real measured speed that using 100000[ppr]encoder.]

6. Drive Output Signal Monitoring

Ezi-STEP Plus-R MINI provides loss of step, run / stop, over-current, over-heat, over-voltage, power, and motor connection alarms that can be monitored by the controller and visible by a motor-mounted flashing led indicator.

7. Improvement of High-Speed Driving

Depending on the speed of a stepping motor, Ezi-STEP Plus-R MINI automatically increases the supply voltage and prevents the torque lowering due to the low operating voltage to the motor caused by back-emf voltage, this enables high-speed operation. Additionally, the software damping algo-rithm minimizes the vibration and prevents the loss-of-synchronization at high-speed.

Part Numbering Method

Ezi-STEP-PR-MI-20M-BK-□

Ezi-STEP	**Product Name**

MNB : Mini	**Drive Series Type**
MPB : Mini Power	
HPB : High Power	
MI : Mini Type	
PR : Plus RS-485	
PR-MI : Plus RS-485 Mini Type	
BT : Built In	
ALL : All Type	

20mm	**Motor Flange Size**
28mm	
42mm	

User Code	

Brake	No Indication : No
	BK-Brake

Motor Length	**S :** Single
	M : Middle
	L : Large
	XL : Extra Large

Motor, Drive Combination

UNIT No.	MOTOR No.	DRIVE No.
Ezi-STEP-PR-MI-20M	BM-20M	EzT-NDR-MI-20M
Ezi-STEP-PR-MI-20L	BM-20L	EzT-NDR-MI-20L
Ezi-STEP-PR-MI-28S	BM-28S	EzT-NDR-MI-28S
Ezi-STEP-PR-MI-28M	BM-28M	EzT-NDR-MI-28M
Ezi-STEP-PR-MI-28L	BM-28L	EzT-NDR-MI-28L
Ezi-STEP-PR-MI-42S	BM-42S	EzT-NDR-MI-42S
Ezi-STEP-PR-MI-42M	BM-42M	EzT-NDR-MI-42M
Ezi-STEP-PR-MI-42L	BM-42L	EzT-NDR-MI-42L
Ezi-STEP-PR-MI-42XL	BM-42XL	EzT-NDR-MI-42XL

Motor Specification Table

Model		Unit	20		28			42			
			20M	20L	28S	28M	28L	42S	42M	42L	42XL
DRIVE METHOD		-	BI-POLAR								
Number OF PHASES		-	2	2	2	2	2	2	2	2	2
VOLTAGE		VDC	2.75	3.0	3.0	3.0	3.0	3.36	4.32	4.56	7.2
CURRENT per PHASE		A	0.5	0.5	0.95	0.95	0.95	1.2	1.2	1.2	1.2
RESISTANCE per PHASE		Ohm	5.5	6.0	3.2	3.2	3.2	2.8	3.6	3.8	6
INDUCTANCE per PHASE		mH	2.0	2.6	2.0	2.7	3.2	5.4	7.2	8	15.6
HOLDING TORQUE		N·m	0.016	0.025	0.069	0.10	0.12	0.320	0.440	0.500	0.800
ROTOR INERTIA		g·cm^2	2.5	3.3	9	13	18	35	54	77	114
WEIGHTS		g	50	80	110	140	200	250	280	350	500
LENGTH(L)		mm	28	38	32	45	50	34	40	48	60
ALLOWABLE OVERHUNG LOAD (DISTANCE FROM END OF SHAFT)	3mm	N	18	18	30	30	30	22	22	22	22
	8mm		30	30	38	38	38	26	26	26	26
	13mm		-	-	53	53	53	33	33	33	33
	18mm		-	-	-	-	-	46	46	46	46
ALLOWABLE THRUST LOAD		N	Lower than motor weight								
INSULATION RESISTANCE		Mohm	100 MΩ MIN.(at 500VDC)								
INSULATION CLASS		-	CLASS B(130℃)								
OPERATING TEMPERATURE		℃	0 to 55								

Ezi-STEP Plus-R MINI_ 20 Series

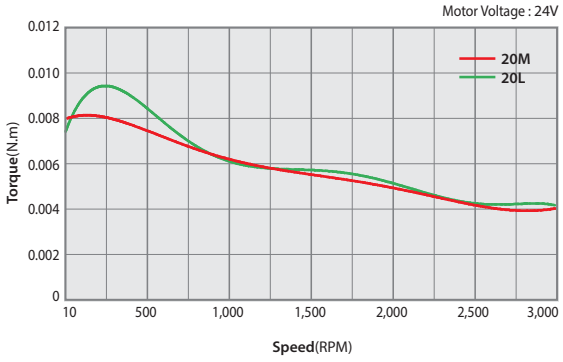

Ezi-STEP Plus-R MINI_ 28 Series

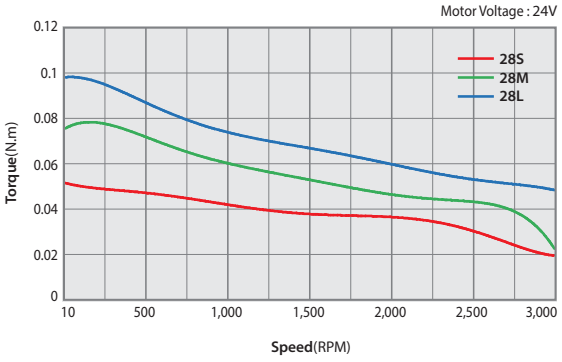

Ezi-STEP Plus-R MINI_ 42 Series

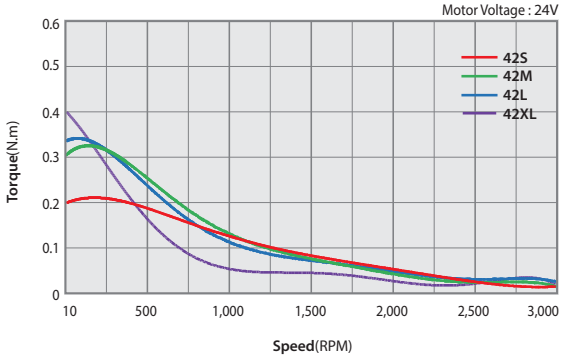

Motor Drawing

Ezi-STEP Plus-R MINI_ 20mm

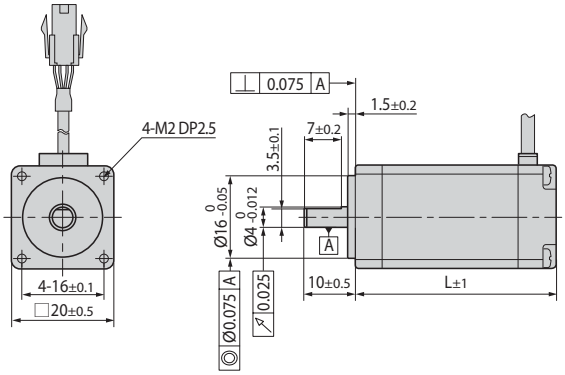

20mm

Model Name	Length(L)
BM-20M	28
BM-20L	38

Ezi-STEP Plus-R MINI_ 28mm

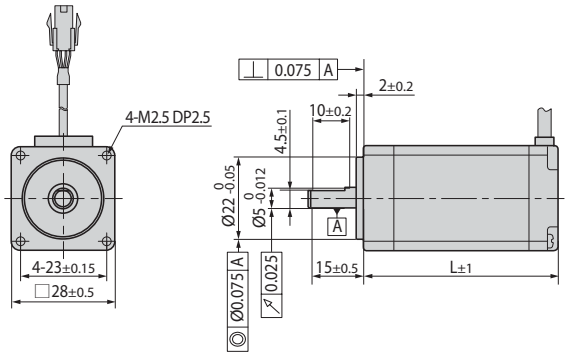

28mm

Model Name	Length(L)
BM-28S	32
BM-28M	45
BM-28L	50

Ezi-STEP Plus-R MINI_ 42mm

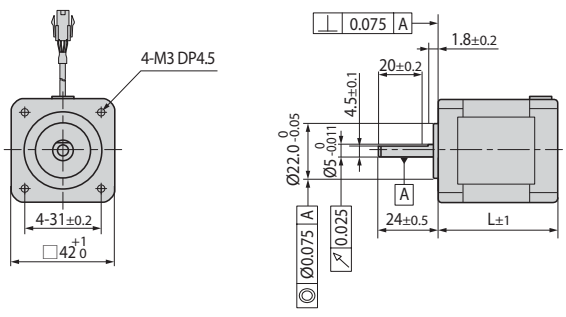

42mm

Model Name	Length(L)
BM-42S	34
BM-42M	40
BM-42L	48
BM-42XL	60

Drive Specification

Specifications

Motor Model		BM-20 Series	BM-28 Series	BM-42 Series
Drive Model		EzT-NDR-MI-20 Series	EzT-NDR-MI-28 Series	EzT-NDR-MI-42 Series
Input Voltage		24VDC ±10%		
Control Method		Bipolar PWM drive with 32bit DSP		
Multi Axes Drive		Maximum 16 axes through Daisy-Chain		
Position Table		64 Motion Command Steps(Continuous, Wait, Loop, Jump and External start etc.)		
Current Consumption		Max. 500mA(Except Motor Current)		
Operating Condition	Temperature	· In Use : 0 ~ 50˚C · In Storage : -20 ~ 70˚C		
	Humidity	· In Use : 35 ~ 85% RH(Non-condensing) · In Storage : 10 ~ 90% RH(Non-condensing)		
	Vib. Resist.	0.5G		
Function	Rotation Speed	0 ~ 3,000[rpm]		
	Resolution[ppr]	500 / 1,000 / 1,600 / 2,000 / 3,200 / 3,600 / 4,000 / 5,000 / 6,400 / 8,000 / 10,000 20,000 / 25,000 / 36,000 / 40,000 / 50,000(Selectable by Parameter) ※ Default : 10,000		
	Protection	Over Current Error, Over Speed Error, Step Out Error, Over Temperature Error, Over Regenerated Voltage Error, Motor Connection Error, Motor Voltage Error, System Error, ROM Error		
	LED Display	Power, Alarm, CW Rotation, CCW Rotation		
	Stop Current	10% ~ 100%(Selectable by Parameter) Be setted to set value of Stop Current after 0.1 second after motor stop. ※ Default : 50%		
	Rotational Direction	CW / CCW(Selectable by Parameter) Used when changing the direction of motor rotate. ※ Default : CW		
I/O Signal	Input Signal	3 dedicated input(LIMIT+, LIMIT-, ORIGIN), 9 programmable input(Photocoupler)		
	Output Signal	1 dedicated output(Compare Out), 9 programmable output(Phhotocoupler), Brake signal		
Communication Interface		The RS-485 serial communication with PC Transmission speed : 9,600 ~ 921,600[bps]		
Position Control		Incremental mode / Absolute mode Data Range : -134,217,727 to +134,217,727pulse, Operating speed : Max. 3000[rpm]		
MPI Version		Origin Sensor, ±Limit sensor, Z phase(By External Encoder)		
GUI		User Interface Program within Windows		
Software		Motion Library(DLL) for windows 2000 / XP / 7 / 8 / 10 / Vista		

Drive Dimension(mm)

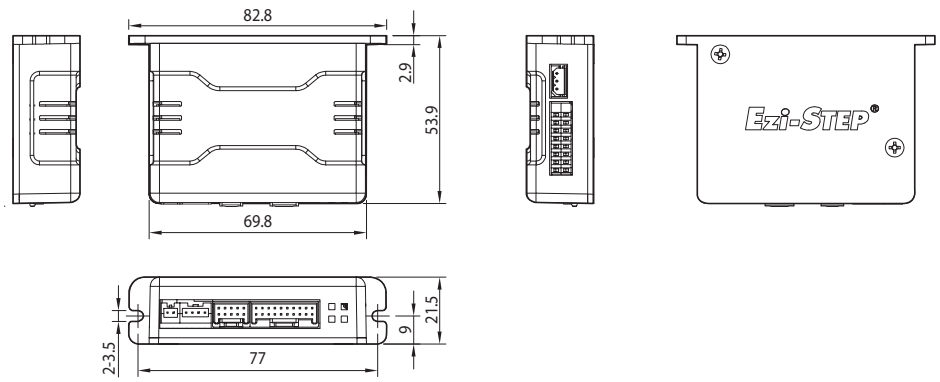

Setting and Operation

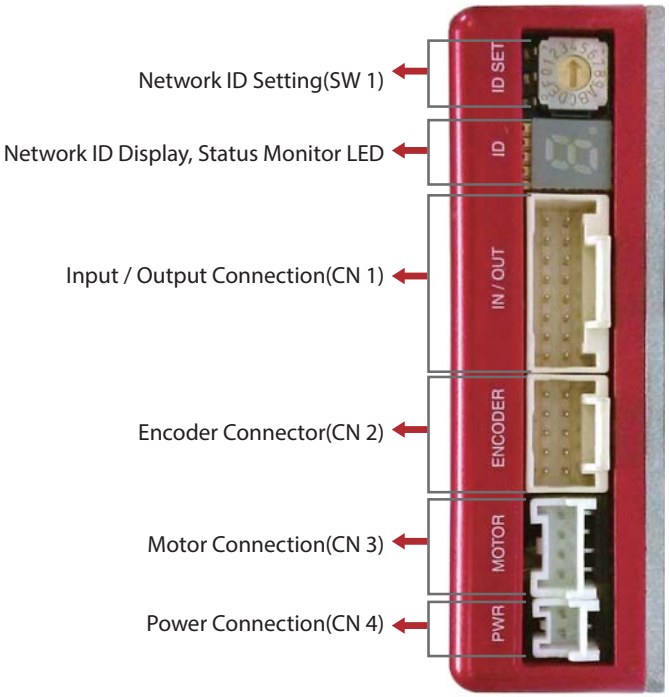

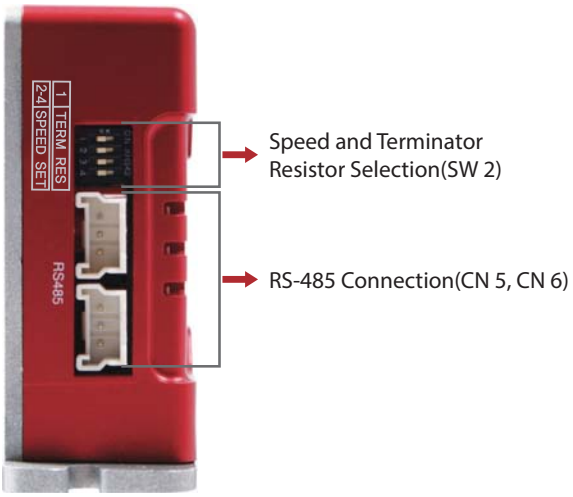

System Operation Manual

Status Monitor LED

1. Protection function and 7-Segment flash times

Time	Protection	Conditions
1	Over Current Error	The current through power devices in inverter exceeds the limit value
2	Over Speed Error	Motor speed exceed 3,000[rpm]
3	Step Out Error	Abnormally motor do not followed pulsed input
5	Over Temperature Error	Internal temperature of a motor drive exceeded 55˚C
6	Over Regeneratived Voltage Error	Back-EMF more high limit value*1
7	Motor Connect Error	The power is ON without connection of the motor cable to drive
9	Motor Voltage Error	Motor voltage is out of limited value*2
11	System Error	Error occurs in drive system
12	ROM Error	Error occurs in parameter storage device(ROM)

*1 : Voltage limit of Back-EMF depends on motor model

*2 : Motor limit voltage value depends on motor model

※Please refer to the manual

Alarm 7-Segment flash(ex : Step Out Error)



Connector

1. Input / Output Connection(CN 1)

No.	Function	I/O
1	24VDC	Input
2	24VDC GND	Input
3	BRAKE+	Output
4	BRAKE-	Output
5	+Limit Sensor	Input
6	-Limit Sensor	Input
7	Origin Sensor	Input
8	Digital IN 1	Input

No.	Function	I/O
9	Digital IN 2	Input
10	Digital IN 3	Input
11	Digital IN 4	Input
12	Digital IN 5	Input
13	Digital IN 6	Input
14	Digital IN 7	Input
15	Compare Out	Output
16	Digital OUT 1	Output

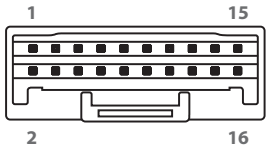

2. Encoder Connector(CN 2)

No.	Function	I/O
1	A+	Input
2	A-	Input
3	B+	Input
4	B-	Input
5	Z+	Input
6	Z-	Input
7	5VDC	Output
8	5VDC GND	Output
9	F. GND	----
10	F. GND	----

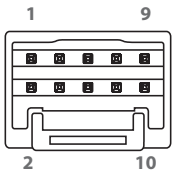

※ Used for monitoring the external encoder signal.

3. Motor Connection(CN 3)

No.	Function	No.	Function
1	B Phase	3	/ A Phase
2	/ B Phase	4	A Phase

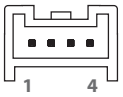

4. Power Connection(CN 4)

No.	Function
1	24VDC ±10%
2	GND

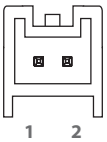

5. RS-485 Connection(CN 5, CN 6)

RS-485 Communication port to connect with Host Controller

No.	Function
1	+DATA
2	-DATA
3	GND

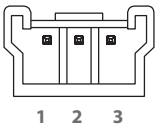

Cable Connector

1. Input / Output Connection(CN 1)

Item	Specification	Maker
Housing	501646-1600	MOLEX
Terminal	501648-1000(AWG 26 ~ 28)	

2. Encoder Connector(CN 2)

Item	Specification	Maker
Housing	501646-1000	MOLEX
Terminal	501648-1000(AWG 26 ~ 28)	

3. Motor Connection(CN 3)

Item	Specification	Maker
Housing	PAP-04V-S	JST
Terminal	SPHD-001T-P0.5	

4. Power Connection(CN 4)

Item	Specification	Maker
Housing	PAP-02V-S	JST
Terminal	SPHD-001T-P0.5	

5. RS-485 Connection(CN 5, CN 6)

Item	Specification	Maker
Housing	33507-0300	MOLEX
Terminal	50212-8100	

Switch

1. Network ID Setting(SW 1)

Position	ID No.
0	0
1	1
2	2
3	3
4	4
5	5
6	6
7	7

Position	ID No.
8	8
9	9
A	10
B	11
C	12
D	13
E	14
F	15



※ Maximum 16 axis can be connected in one network.

2. Speed and Terminator Resistor Selection Switch(SW 2)

The purpose of this is to setting the communication speed and connect a terminator resistor if drive is installed at the end of network.

SW 2.1 used for connecting the terminator resistor.

SW 2.2~SW 2.4 used for setting speed as follows.

SW 2.1	SW 2.2	SW 2.3	SW 2.4	Baud Rate[bps]
-	OFF	OFF	OFF	9,600
-	ON	OFF	OFF	19,200
-	OFF	ON	OFF	38,400
-	ON	ON	OFF	57,600
-	OFF	OFF	ON	115,200*1
-	ON	OFF	ON	230,400
-	OFF	ON	ON	460,800
-	ON	ON	ON	921,600

※ Possible to use common PCI Bus type RS-485 communication board for High speed communication.
(Please contact with Distributor)

*1 : Default setting value

If SW 2.1 is OFF, terminator resistor is disconnected.
If SW 2.2 is ON, terminator resistor is connected.



System Configuration

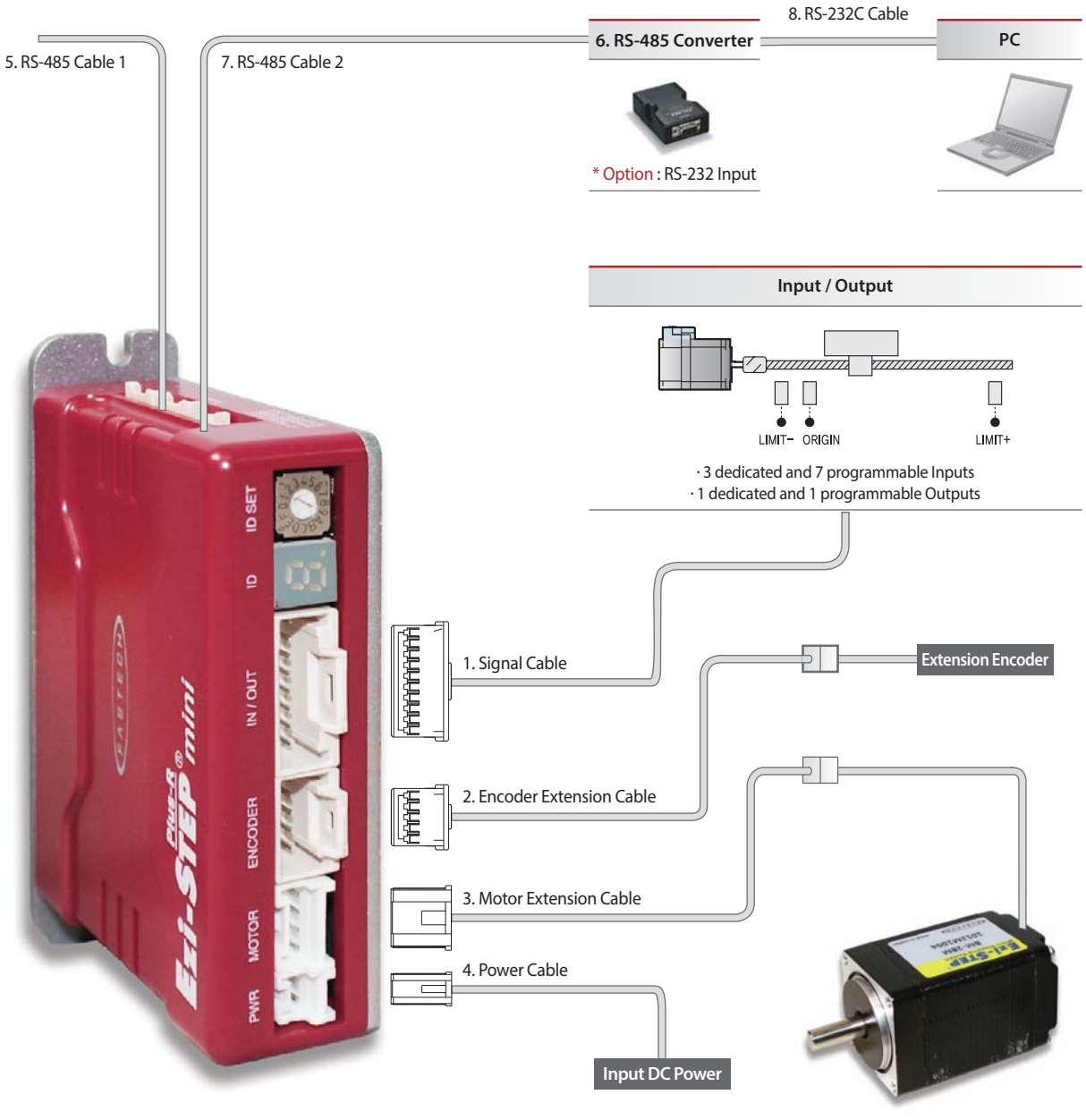

Type	Signal Cable	Encoder Cable	Motor Cable	Power Cable	RS-485 Cable
Standard Length	-	-	30cm	-	-
Max. Length	20m	20m	20m	2m	30m

Option

1. Signal Cable

Available to connect between Control System and Ezi-STEP Plus-R MINI.

Model Name	Length[m]	Remark
CSVA-S-□□□F	□□□	Normal Cable
CSVA-S-□□□M	□□□	Robot Cable

※ □□□ is for Cable Length, The unit is 1m and Max. 20m Length.

2. Encoder Extension Cable

Available to extended connection between Encoder and Ezi-STEP Plus-R MINI.

Model Name	Length[m]	Remark
CSVI-E-□□□F	□□□	Normal Cable
CSVI-E-□□□M	□□□	Robot Cable

※ □□□ is for Cable Length, The unit is 1m and Max. 20m Length.

3. Motor Extension Cable

Available to extended connection between motor and Ezi-STEP Plus-R MINI.

Model Name	Length[m]	Remark
CMNB-M-□□□F	□□□	Normal Cable
CMNB-M-□□□M	□□□	Robot Cable

※ □□□ is for Cable Length, The unit is 1m and Max. 20m Length.

4. Power Cable

Available to connect between Power and Ezi-STEP Plus-R MINI.

Model Name	Length[m]	Remark
CMNB-P-□□□F	□□□	Normal Cable
CMNB-P-□□□M	□□□	Robot Cable

※ □□□ is for Cable Length, The unit is 1m and Max. 2m Length.

5.RS-485 Cable 1

Model Name	Length[m]	Remark
CGNB-R-0R6F	0.6	Normal Cable
CGNB-R-001F	1	
CGNB-R-1R5F	1.5	
CGNB-R-002F	2	
CGNB-R-003F	3	
CGNB-R-005F	5	

※ Common cable to connect Ezi-SERVO ALL, Ezi-STEP ALL, Ezi-MOTIONLINK and Ezi-SERVO Network

6. FAS-RCR(RS-232C to RS-485 Converter)

Type	Specification
Transmission speed	Max. 115.2Kbps
Comm. Distance	RS-232C : Max. 15m RS-485 : Max. 1.2km
Connector	RS-232C : DB9 Female RS-485 : RJ-45
Dimension	50×75×23mm
Weight	38g
Power Status	Powered from PC (Usable for external DC5~24V)

7. RS-485 Cable 2

FAS-RCR to Ezi-SERVO ALL, FAS-RCR to Ezi-STEP ALL,
FAS-RCR to Ezi-SERVO Plus-R MINI, FAS-RCR to Ezi-MOTIONLINK

Model Name	Length[m]	Remark
CGNA-R-0R6F	0.6	Normal Cable
CGNA-R-001F	1	
CGNA-R-1R5F	1.5	
CGNA-R-002F	2	
CGNA-R-003F	3	
CGNA-R-005F	5	

8. RS-232C Cable

Model Name	Length[m]	Remark
CGNR-C-002F	2	Normal Cable
CGNR-C-003F	3	
CGNR-C-005F	5	

External Wiring Diagram

Ezi-STEP Plus-R MINI

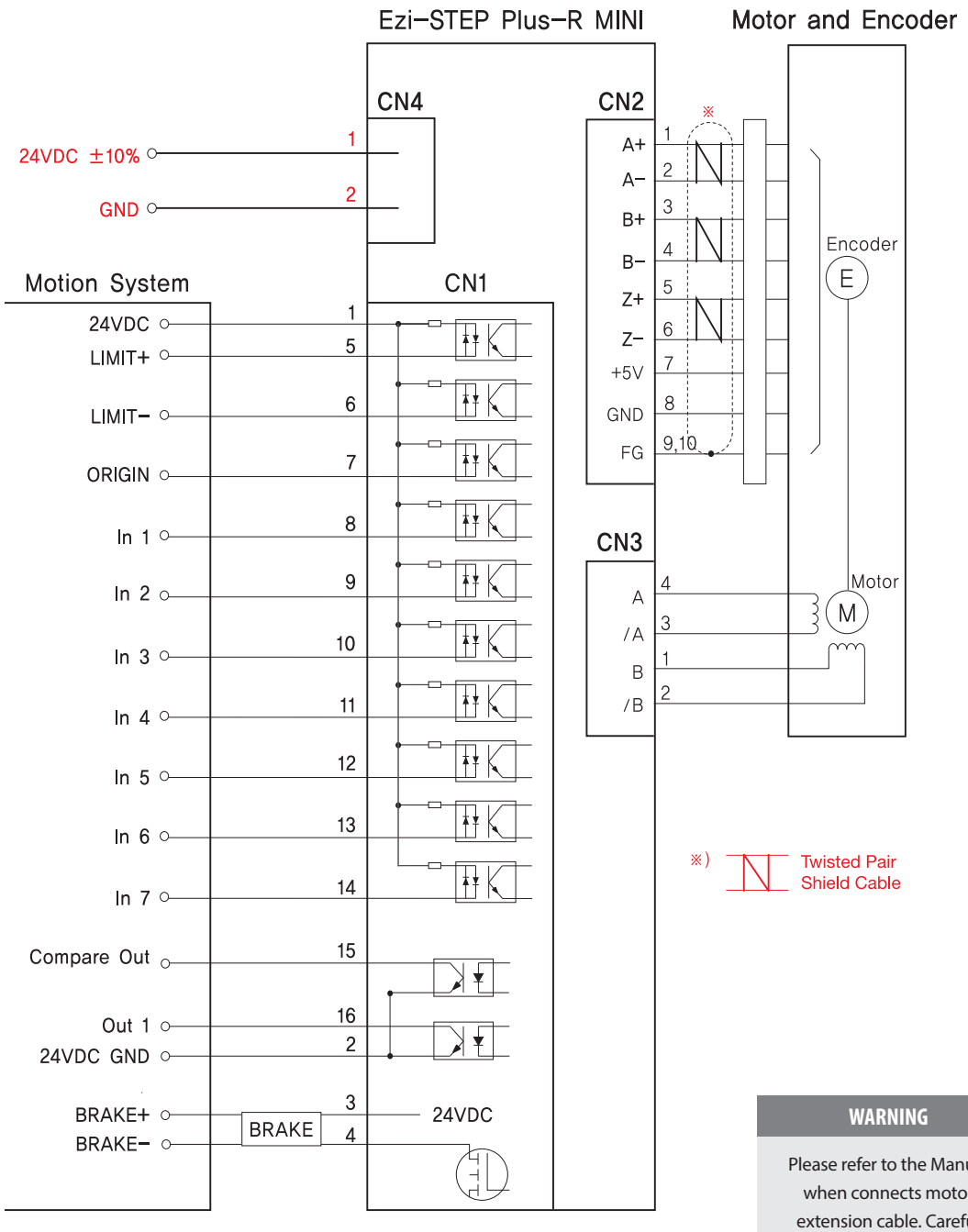

WARNING

Please refer to the Manual when connects motor extension cable. Careful connection will be required to protect from any damages.

Graphic User Interface(GUI)

Screen Configuration

1. Controller Lists and Motion Test

This screen display the controller list that connected to system.
You can make a single move, jog and origin command and also the motor status is displayed.

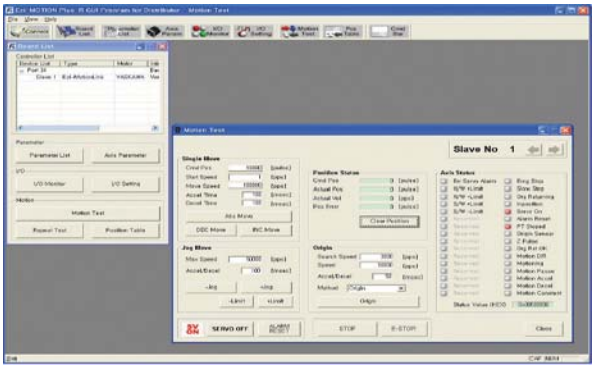

2. Axis Parameter Setup

You can select various parameters that frequently used.
(ex : sensor input logic)

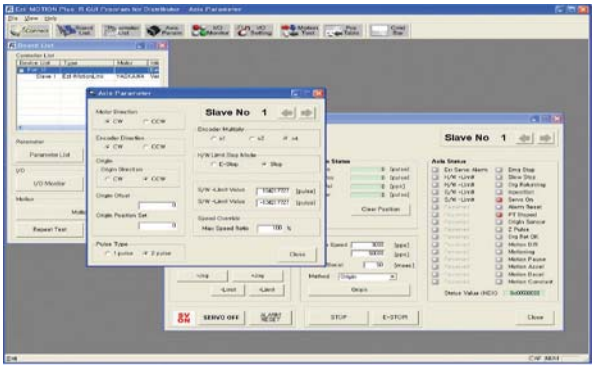

3. I/O Monitoring and Setting

You can select various digital input and output signals of controller.

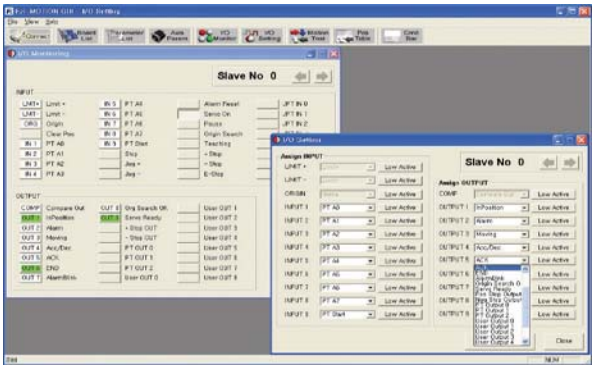

4. Parameter List

All of the parameters are displayed and modified on this screen.



5. Motion Repeat and Monitor Status

Target position, speed, delay time and repeat count are selected for repeat motion test. Motion library(DLL) is also displayed on screen.

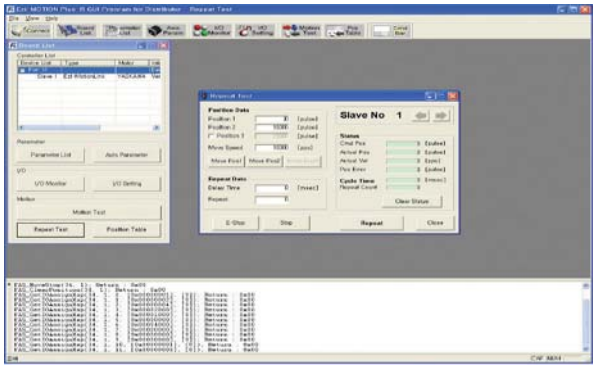

6. Position Table

You can edit the position table and execute it. The position table data can be saved and loaded from Flash ROM and Windows file.

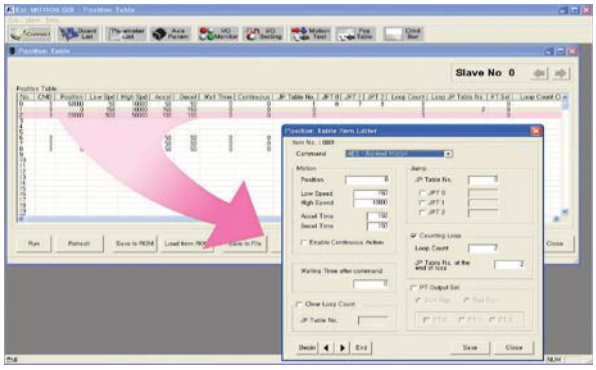

FASTECH

Fast, Accurate, Smooth Motion

FASTECH Co., Ltd.
Rm#1202, 401-dong, Bucheon Techno-Park,
655, Pyeongcheon-ro, Bucheon-si Gyeonggi-do,
Republic of Korea (Zip:14502)
TEL : +82-32-234-6300 FAX : +82-32-234-6302
E-mail : fastech@fastech.co.kr
Homepage : www.fastech.co.kr

©Copyright 2010 FASTECH Co., Ltd.
All Rights Reserved. Feb 23, 2018 Rev.04