REV.NO.	DATE	DESCRIPTION	REV'D BY	CHE'D BY	APP'D BY
△					
△					
△					

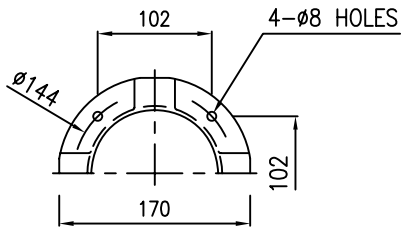

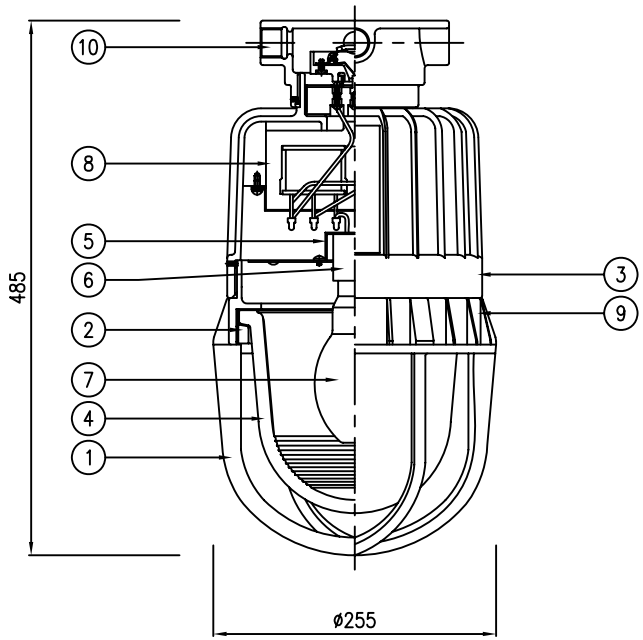

TYPE "_"

SELECTION TABLE

ITEM NO.	LAMP	LAMP SIZE	Q'TY
	☐ MERCURY VAPOR	☐ 70W	– SET
		☐ 100W	– SET
	☐ H. P. SODIUM		
	☐ METAL HALIDE		

SUPPLY VOLTAGE				FREQUENCY	
	☐ AC110V	☐ AC230V			☐ 50Hz
	☐ AC120V	☐ AC240V			☐ 60Hz
	☐ AC208V	☐ AC277V			
	☐ AC220V	☐			

OPTION			
EXTERNAL REFLECTOR	☐ INCLUDED	■ EXCLUDED	
	☐ DOME TYPE	☐ 30° ANGLE	
	MATERIAL	F. R. POLYESTER	

HUB SCHEDULE		
	THREAD	☐ NPT ☐ PF ☐ MM ☐
	SIZE	☐ 3/4" ☐ 1" ☐ M25 ☐
	LOCATION	1 / 2 / 3 / 4 ☐ 1-2 ☐ 1-3 ☐ 1-2-3 ☐ 1-2-3-4
		☐ W/2-BLIND PLUGS ☐ NONE

NOTE

1.

NO	PARTS	MATERIAL	REMARK
10	MOUNTING BOX	CAST ALUMINIUM ALLOY	
9	GLOBE RING	DIE CASTING ALUMINIUM	
8	BALLAST	FOR H.I.D LAMP	HIGH POWER FACTOR
7	LAMP	H.I.D LAMP	SEE SELECTION TABLE
6	LAMP HOLDER	PORCELAIN W/MEDIUM SOCKET	E26
5	LAMP HOLDER GUIDE	SHEET STEEL	
4	GLOBE	HEAT RESISTANT HARD GLASS	
3	BODY	DIE CASTING ALUMINIUM	
2	LOCK RING	DIE CASTING ALUMINIUM	
1	GUARD	DIE CASTING ALUMINIUM	

SCALE	N.S	APPROVED BY	
UNIT	mm	CHECKED BY	
DATE		DRAWN BY	

南北電氣株式會社
NAMBUK ELECTRIC CO.,LTD

TITLE	H.I.D LTG. FIXTURE (CEILING MTG. TYPE)		APPLICATION AREA	
CAT NO.	EG SERIES	CLASS OF PROTECTION	Ex d IIC T4 IP66	
COLOR FINISHING	MUNSELL NO. 7.5BG 6/1.5	DRAWING NO.	NB-ELH-D1-A01	

* LENGTH(L) ORDER MADE.

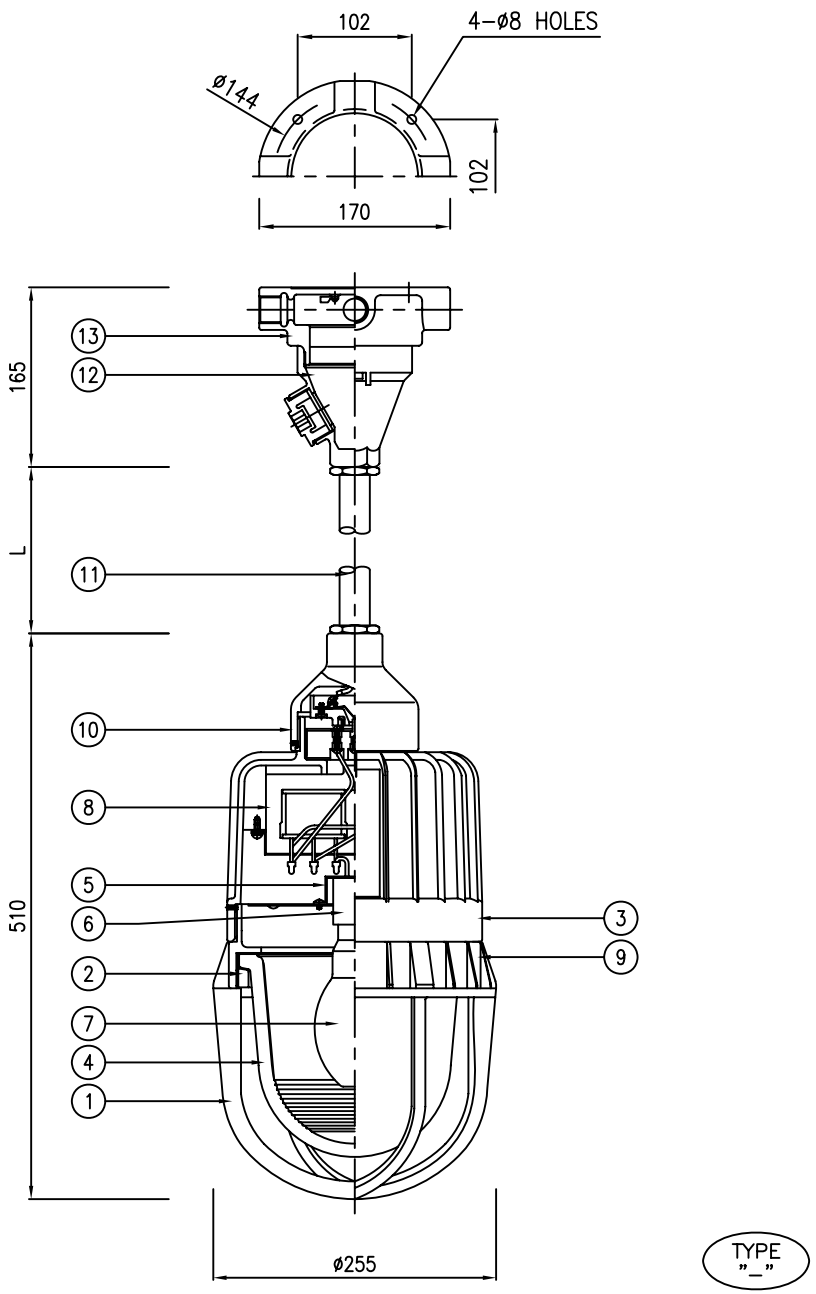

TYPE "_"

REV.NO.	DATE	DESCRIPTION	REV'D BY	CHE'D BY	APP'D BY
△					
△					
△					

SELECTION TABLE

ITEM NO.	LAMP	LAMP SIZE	Q'TY
	☐ MERCURY VAPOR	☐ 70W	– SET
		☐ 100W	– SET
	☐ H. P. SODIUM		
	☐ METAL HALIDE		

SUPPLY VOLTAGE				FREQUENCY	
☐ AC110V	☐ AC230V			☐ 50Hz	
☐ AC120V	☐ AC240V			☐ 60Hz	
☐ AC208V	☐ AC277V				
☐ AC220V	☐				

OPTION			
EXTERNAL REFLECTOR	☐ INCLUDED	■ EXCLUDED	
	☐ DOME TYPE	☐ 30° ANGLE	
	MATERIAL	F. R. POLYESTER	

HUB SCHEDULE		
THREAD	☐ NPT ☐ PF ☐ MM ☐	
SIZE	☐ 3/4" ☐ 1" ☐ M25 ☐	
LOCATION	1 / 2 / 3 / 4	☐ 1–2 ☐ 1–3 ☐ 1–2–3 ☐ 1–2–3–4
	☐ W/2–BLIND PLUGS	☐ NONE

NOTE

1.

NO	PARTS	MATERIAL	REMARK
13	MOUNTING BOX	CAST ALUMINIUM ALLOY	
12	FLANGE	DIE CASTING ALUMINIUM	
11	SUSPENSION STEM	HEAVY GAUGE STEEL PIPE	
10	HOOD	DIE CASTING ALUMINIUM	
9	GLOBE RING	DIE CASTING ALUMINIUM	
8	BALLAST	FOR H.I.D LAMP	HIGH POWER FACTOR
7	LAMP	H.I.D LAMP	SEE SELECTION TABLE
6	LAMP HOLDER	PORCELAIN W/MEDIUM SOCKET	E26
5	LAMP HOLDER GUIDE	SHEET STEEL	
4	GLOBE	HEAT RESISTANT HARD GLASS	
3	BODY	DIE CASTING ALUMINIUM	
2	LOCK RING	DIE CASTING ALUMINIUM	
1	GUARD	DIE CASTING ALUMINIUM	

SCALE	N.S	APPROVED BY	
UNIT	mm	CHECKED BY	
DATE		DRAWN BY	

南北電氣株式會社
NAMBUK ELECTRIC CO.,LTD

TITLE	H.I.D LTG. FIXTURE (PENDANT MTG. TYPE)		APPLICATION AREA	
CAT NO.	EG SERIES	CLASS OF PROTECTION	Ex d IIC T4 IP66	
COLOR FINISHING	MUNSELL NO. 7.5BG 6/1.5	DRAWING NO.	NB-ELH-D1-A01	

REV.NO.	DATE	DESCRIPTION	REV'D BY	CHE'D BY	APP'D BY
△					
△					
△					

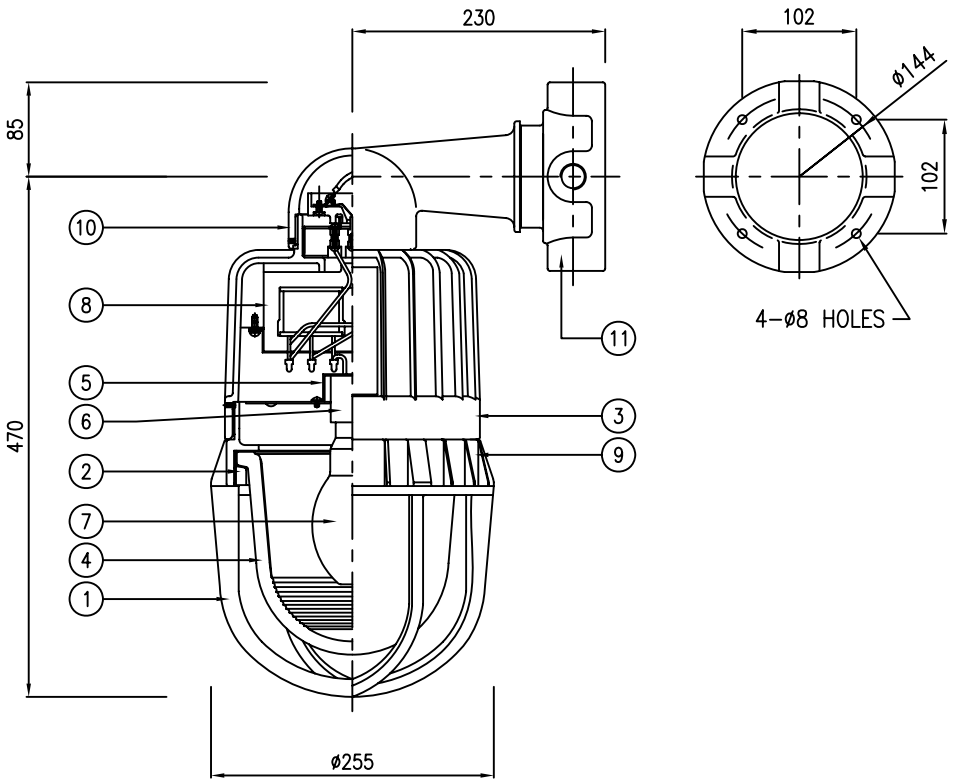

TYPE "_"

SELECTION TABLE

ITEM NO.	LAMP	LAMP SIZE	Q'TY
	☐ MERCURY VAPOR	☐ 70W	– SET
		☐ 100W	– SET
	☐ H. P. SODIUM		
	☐ METAL HALIDE		

SUPPLY VOLTAGE				FREQUENCY	
	☐ AC110V	☐ AC230V			☐ 50Hz
	☐ AC120V	☐ AC240V			☐ 60Hz
	☐ AC208V	☐ AC277V			
	☐ AC220V	☐			

OPTION			
EXTERNAL REFLECTOR	☐ INCLUDED	■ EXCLUDED	
	☐ DOME TYPE	☐ 30° ANGLE	
	MATERIAL	F. R. POLYESTER	

HUB SCHEDULE		
	THREAD	☐ NPT ☐ PF ☐ MM ☐
	SIZE	☐ 3/4" ☐ 1" ☐ M25 ☐
	LOCATION	1 / 2 / 3 / 4 ☐ 1-2 ☐ 1-3 ☐ 1-2-3 ☐ 1-2-3-4
		☐ W/2-BLIND PLUGS ☐ NONE

NOTE

1.

NO	PARTS	MATERIAL	REMARK
11	MOUNTING BOX	CAST ALUMINIUM ALLOY	
10	BRACKET ARM	CAST ALUMINIUM ALLOY	
9	GLOBE RING	DIE CASTING ALUMINIUM	
8	BALLAST	FOR H.I.D LAMP	HIGH POWER FACTOR
7	LAMP	H.I.D LAMP	SEE SELECTION TABLE
6	LAMP HOLDER	PORCELAIN W/MEDIUM SOCKET	E26
5	LAMP HOLDER GUIDE	SHEET STEEL	
4	GLOBE	HEAT RESISTANT HARD GLASS	
3	BODY	DIE CASTING ALUMINIUM	
2	LOCK RING	DIE CASTING ALUMINIUM	
1	GUARD	DIE CASTING ALUMINIUM	

SCALE	N.S	APPROVED BY	
UNIT	mm	CHECKED BY	
DATE		DRAWN BY	

南北電氣株式會社
NAMBUK ELECTRIC CO.,LTD

TITLE	H.I.D LTG. FIXTURE (90° BRACKET MTG. TYPE)		APPLICATION AREA	
CAT NO.	EG SERIES	CLASS OF PROTECTION	Ex d IIC T4 IP66	
COLOR FINISHING	MUNSELL NO. 7.5BG 6/1.5	DRAWING NO.	NB-ELH-D1-A01	

* LENGTH(L) ORDER MADE.

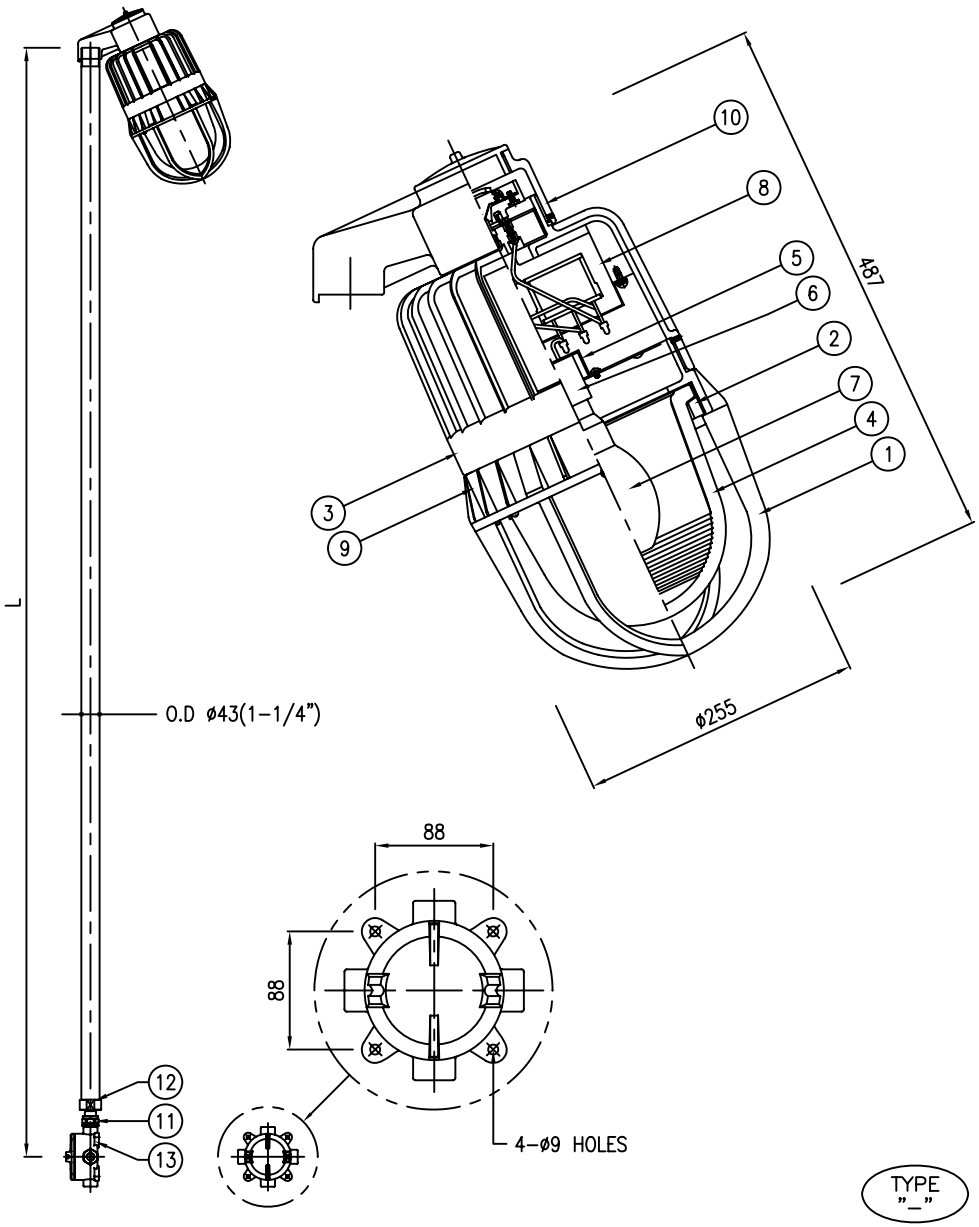

TYPE "_"

REV.NO.	DATE	DESCRIPTION	REV'D BY	CHE'D BY	APP'D BY
△					
△					
△					

SELECTION TABLE

ITEM NO.	LAMP	LAMP SIZE	Q'TY
	☐ MERCURY VAPOR ☐ H. P. SODIUM ☐ METAL HALIDE	☐ 70W	– SET
		☐ 100W	– SET

SUPPLY VOLTAGE				FREQUENCY	
	☐ AC110V	☐ AC230V		☐ 50Hz	
	☐ AC120V	☐ AC240V		☐ 60Hz	
	☐ AC208V	☐ AC277V			
	☐ AC220V	☐			

OPTION			
EXTERNAL REFLECTOR	☐ INCLUDED	■ EXCLUDED	
	☐ DOME TYPE	☐ 30° ANGLE	
	MATERIAL	F. R. POLYESTER	

HUB SCHEDULE			
	THREAD	☐ NPT ☐ PF ☐ MM ☐	
	SIZE	☐ 3/4" ☐ 1" ☐ M25 ☐	
	LOCATION	P / 1 / 2 / 3	☐ P-1 ☐ P-2 ☐ P-1-2 ☐ P-1-2-3
		☐ W/2-BLIND PLUGS	☐ NONE

NOTE

1.

NO	PARTS	MATERIAL	REMARK
13	MOUNTING BOX	CAST IRON	
12	SOCKET	CARBON STEEL	
11	UNION COUPLING	CARBON STEEL	
10	STANCHION HOOD	CAST ALUMINIUM ALLOY	
9	GLOBE RING	DIE CASTING ALUMINIUM	
8	BALLAST	FOR H.I.D LAMP	HIGH POWER FACTOR
7	LAMP	H.I.D LAMP	SEE SELECTION TABLE
6	LAMP HOLDER	PORCELAIN W/MEDIUM SOCKET	E26
5	LAMP HOLDER GUIDE	SHEET STEEL	
4	GLOBE	HEAT RESISTANT HARD GLASS	
3	BODY	DIE CASTING ALUMINIUM	
2	LOCK RING	DIE CASTING ALUMINIUM	
1	GUARD	DIE CASTING ALUMINIUM	

SCALE	N.S	APPROVED BY	
UNIT	mm	CHECKED BY	
DATE		DRAWN BY	

南北電氣株式會社
NAMBUK ELECTRIC CO.,LTD

TITLE	H.I.D LTG. FIXTURE (HAND RAIL TYPE)		APPLICATION AREA	
CAT NO.	EG SERIES		CLASS OF PROTECTION	Ex d IIC T4 IP66
COLOR FINISHING	LTG. FIXTURE : MUNSELL NO. 7.5BG 6/1.5 POLE : HOT DIP GALVANIZED		DRAWING NO.	NB-ELH-D1-A01

REV.NO.	DATE	DESCRIPTION	REV'D BY	CHE'D BY	APP'D BY
△					
△					
△					

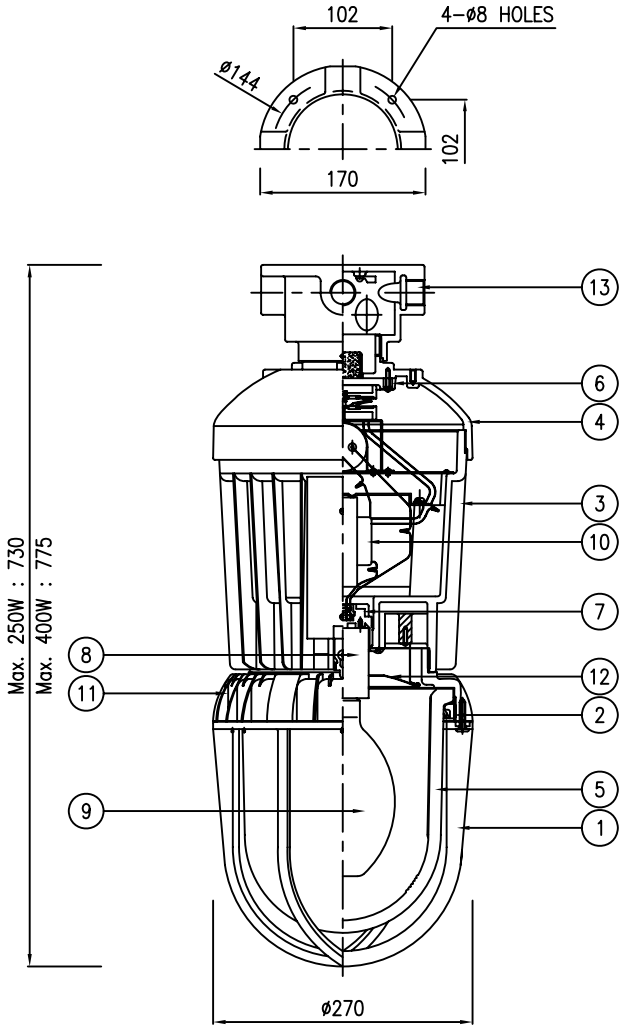

TYPE "_"

SELECTION TABLE

ITEM NO.	LAMP	LAMP SIZE	Q'TY
	☐ MERCURY VAPOR	☐ 150W	– SET
		☐ 175W	– SET
	☐ H. P. SODIUM	☐ 200W	– SET
	☐ METAL HALIDE	☐ 250W	– SET

SUPPLY VOLTAGE				FREQUENCY	
	☐ AC110V	☐ AC230V		☐ 50Hz	
	☐ AC120V	☐ AC240V		☐ 60Hz	
	☐ AC208V	☐ AC277V			
	☐ AC220V	☐			

OPTION			
EXTERNAL REFLECTOR	☐ INCLUDED	■ EXCLUDED	
	☐ DOME TYPE	☐ 30° ANGLE	
	MATERIAL	F. R. POLYESTER	

HUB SCHEDULE			
	THREAD	☐ NPT ☐ PF ☐ MM ☐	
	SIZE	☐ 3/4" ☐ 1" ☐ M25 ☐	
	LOCATION	1 / 2 / 3 / 4	☐ 1–2 ☐ 1–3 ☐ 1–2–3 ☐ 1–2–3–4
		☐ W/2–BLIND PLUGS	☐ NONE

NOTE

1.

NO	PARTS	MATERIAL	REMARK
13	MOUNTING BOX	CAST ALUMINIUM ALLOY	
12	INNER REFLECTOR	HIGH GRADE ALUMINIUM SHEET	
11	GLOBE RING	DIE CASTING ALUMINIUM	
10	BALLAST	FOR H.I.D LAMP	HIGH POWER FACTOR
9	LAMP	H.I.D LAMP	SEE SELECTION TABLE
8	LAMP HOLDER	PORCELAIN W/MOGUL SOCKET	E39
7	LAMP HOLDER GUIDE	DIE CASTING ALUMINIUM	
6	END PLATE	DIE CASTING ALUMINIUM	
5	GLOBE	HEAT RESISTANT HARD GLASS	
4	COVER	DIE CASTING ALUMINIUM	
3	BODY	DIE CASTING ALUMINIUM	
2	LOCK RING	DIE CASTING ALUMINIUM	
1	GUARD	DIE CASTING ALUMINIUM	

SCALE	N.S	APPROVED BY	
UNIT	mm	CHECKED BY	
DATE		DRAWN BY	

南北電氣株式會社
NAMBUK ELECTRIC CO.,LTD

TITLE	H.I.D LTG. FIXTURE (CEILING MTG. TYPE)		APPLICATION AREA	
CAT NO.	EG M –L SERIES		CLASS OF PROTECTION	Ex d IIC T3 IP66
COLOR FINISHING	MUNSELL NO. 7.5BG 6/1.5		DRAWING NO.	NB-ELH-D1-A01

* LENGTH(L) ORDER MADE.

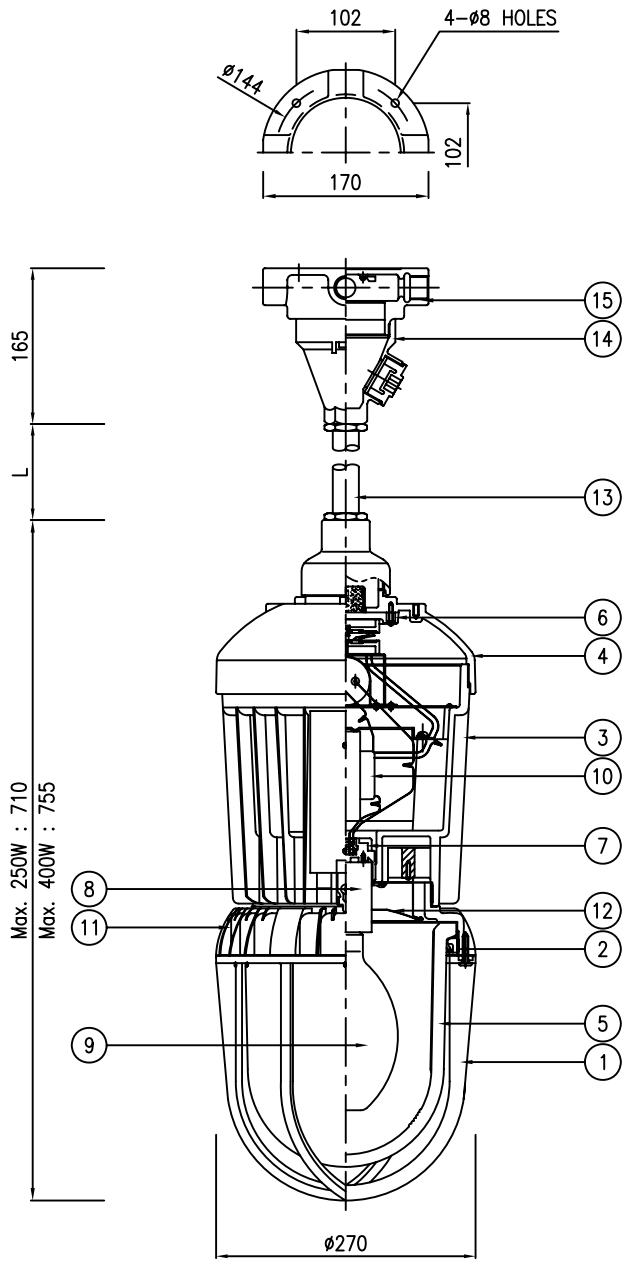

TYPE "_"

REV.NO.	DATE	DESCRIPTION	REV'D BY	CHE'D BY	APP'D BY
△					
△					
△					

SELECTION TABLE

ITEM NO.	LAMP	LAMP SIZE	Q'TY
	☐ MERCURY VAPOR	☐ 150W	– SET
		☐ 175W	– SET
	☐ H. P. SODIUM	☐ 200W	– SET
	☐ METAL HALIDE	☐ 250W	– SET

SUPPLY VOLTAGE				FREQUENCY	
	☐ AC110V	☐ AC230V		☐ 50Hz	
	☐ AC120V	☐ AC240V		☐ 60Hz	
	☐ AC208V	☐ AC277V			
	☐ AC220V	☐			

OPTION			
EXTERNAL REFLECTOR	☐ INCLUDED	■ EXCLUDED	
	☐ DOME TYPE	☐ 30° ANGLE	
	MATERIAL	F. R. POLYESTER	

HUB SCHEDULE		
	THREAD	☐ NPT ☐ PF ☐ MM ☐
	SIZE	☐ 3/4" ☐ 1" ☐ M25 ☐
	LOCATION	1 / 2 / 3 / 4 ☐ 1–2 ☐ 1–3 ☐ 1–2–3 ☐ 1–2–3–4
		☐ W/2–BLIND PLUGS ☐ NONE

NOTE

1.

NO	PARTS	MATERIAL	REMARK
15	MOUNTING BOX	CAST ALUMINIUM ALLOY	
14	FLANGE	DIE CASTING ALUMINIUM	
13	SUSPENSION STEM	HEAVY GAUGE STEEL PIPE	
12	INNER REFLECTOR	HIGH GRADE ALUMINIUM SHEET	
11	GLOBE RING	DIE CASTING ALUMINIUM	
10	BALLAST	FOR H.I.D LAMP	HIGH POWER FACTOR
9	LAMP	H.I.D LAMP	SEE SELECTION TABLE
8	LAMP HOLDER	PORCELAIN W/MOGUL SOCKET	E39
7	LAMP HOLDER GUIDE	DIE CASTING ALUMINIUM	
6	END PLATE	DIE CASTING ALUMINIUM	
5	GLOBE	HEAT RESISTANT HARD GLASS	
4	COVER	DIE CASTING ALUMINIUM	
3	BODY	DIE CASTING ALUMINIUM	
2	LOCK RING	DIE CASTING ALUMINIUM	
1	GUARD	DIE CASTING ALUMINIUM	

SCALE	N.S	APPROVED BY	
UNIT	mm	CHECKED BY	
DATE		DRAWN BY	

南北電氣株式會社
NAMBUK ELECTRIC CO.,LTD

TITLE	H.I.D LTG. FIXTURE (PENDANT MTG. TYPE)		APPLICATION AREA	
CAT NO.	EG M –L SERIES	CLASS OF PROTECTION	Ex d IIC T3 IP66	
COLOR FINISHING	MUNSELL NO. 7.5BG 6/1.5	DRAWING NO.	NB-ELH-D1-A01	

REV.NO.	DATE	DESCRIPTION	REV'D BY	CHE'D BY	APP'D BY
△					
△					
△					

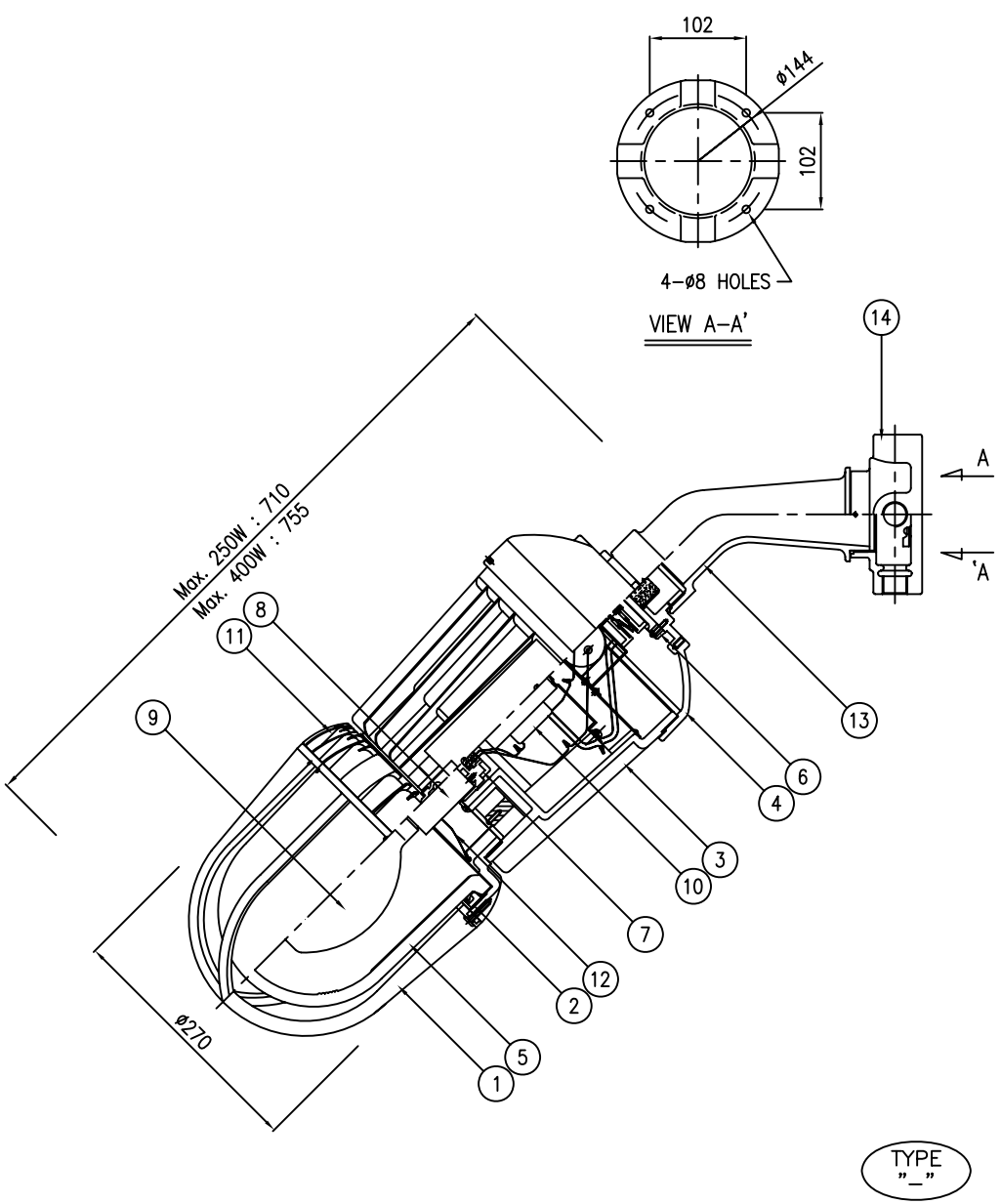

SELECTION TABLE

ITEM NO.	LAMP	LAMP SIZE	Q'TY
	☐ MERCURY VAPOR	☐ 150W	– SET
		☐ 175W	– SET
	☐ H. P. SODIUM	☐ 200W	– SET
	☐ METAL HALIDE	☐ 250W	– SET

SUPPLY VOLTAGE				FREQUENCY	
	☐ AC110V	☐ AC230V		☐ 50Hz	
	☐ AC120V	☐ AC240V		☐ 60Hz	
	☐ AC208V	☐ AC277V			
	☐ AC220V	☐			

OPTION			
EXTERNAL REFLECTOR	☐ INCLUDED	■ EXCLUDED	
	☐ DOME TYPE	☐ 30° ANGLE	
	MATERIAL	F. R. POLYESTER	

HUB SCHEDULE		
	THREAD	☐ NPT ☐ PF ☐ MM ☐
	SIZE	☐ 3/4" ☐ 1" ☐ M25 ☐
	LOCATION	1 / 2 / 3 / 4 ☐ 1-2 ☐ 1-3 ☐ 1-2-3 ☐ 1-2-3-4
		☐ W/2-BLIND PLUGS ☐ NONE

NOTE

1.

NO	PARTS	MATERIAL	REMARK
14	MOUNTING BOX	CAST ALUMINIUM ALLOY	
13	BRACKET ARM	CAST ALUMINIUM ALLOY	
12	INNER REFLECTOR	HIGH GRADE ALUMINIUM SHEET	
11	GLOBE RING	DIE CASTING ALUMINIUM	
10	BALLAST	FOR H.I.D LAMP	HIGH POWER FACTOR
9	LAMP	H.I.D LAMP	SEE SELECTION TABLE
8	LAMP HOLDER	PORCELAIN W/MOGUL SOCKET	E39
7	LAMP HOLDER GUIDE	DIE CASTING ALUMINIUM	
6	END PLATE	DIE CASTING ALUMINIUM	
5	GLOBE	HEAT RESISTANT HARD GLASS	
4	COVER	DIE CASTING ALUMINIUM	
3	BODY	DIE CASTING ALUMINIUM	
2	LOCK RING	DIE CASTING ALUMINIUM	
1	GUARD	DIE CASTING ALUMINIUM	

SCALE	N.S	APPROVED BY	
UNIT	mm	CHECKED BY	
DATE		DRAWN BY	

南北電氣株式會社
NAMBUK ELECTRIC CO.,LTD

TITLE	H.I.D LTG. FIXTURE (BRACKET MTG. TYPE)		APPLICATION AREA	
CAT NO.	EG M -L SERIES	CLASS OF PROTECTION	Ex d IIC T3 IP66	
COLOR FINISHING	MUNSELL NO. 7.5BG 6/1.5	DRAWING NO.	NB-ELH-D1-A01	

REV.NO.	DATE	DESCRIPTION	REV'D BY	CHE'D BY	APP'D BY
△					
△					
△					

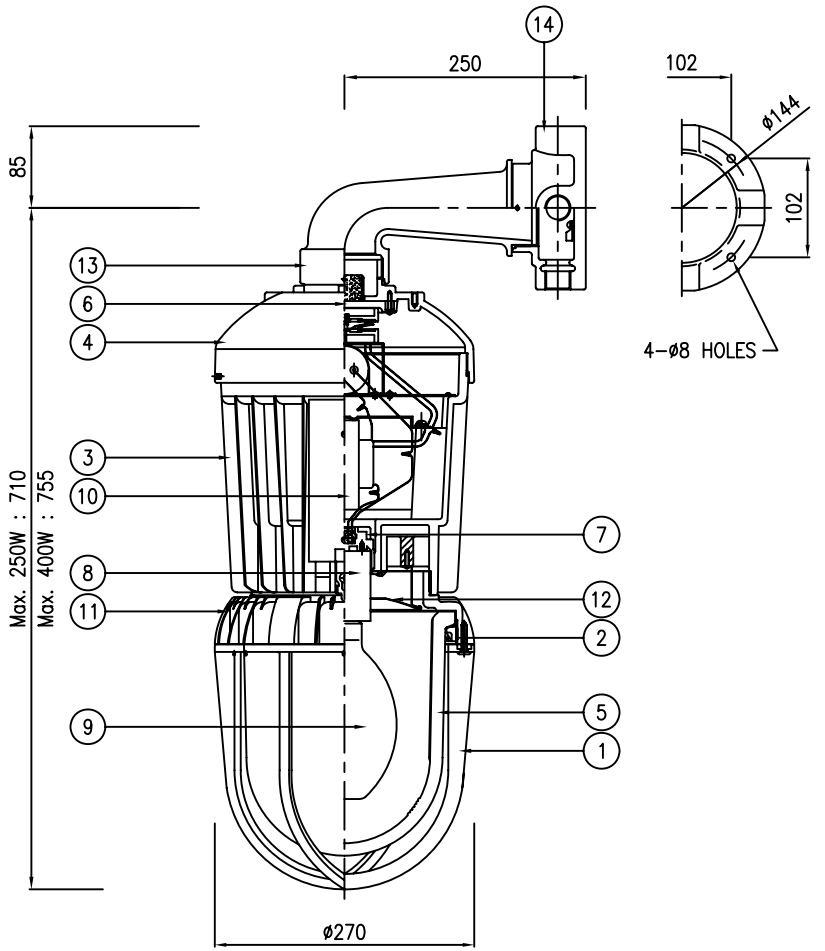

TYPE "_"

SELECTION TABLE

ITEM NO.	LAMP	LAMP SIZE	Q'TY
	☐ MERCURY VAPOR	☐ 150W	– SET
		☐ 175W	– SET
	☐ H. P. SODIUM	☐ 200W	– SET
	☐ METAL HALIDE	☐ 250W	– SET

SUPPLY VOLTAGE				FREQUENCY	
	☐ AC110V	☐ AC230V		☐ 50Hz	
	☐ AC120V	☐ AC240V		☐ 60Hz	
	☐ AC208V	☐ AC277V			
	☐ AC220V	☐			

OPTION			
EXTERNAL REFLECTOR	☐ INCLUDED	■ EXCLUDED	
	☐ DOME TYPE	☐ 30° ANGLE	
	MATERIAL	F. R. POLYESTER	

HUB SCHEDULE			
	THREAD	☐ NPT ☐ PF ☐ MM ☐	
	SIZE	☐ 3/4" ☐ 1" ☐ M25 ☐	
	LOCATION	1 / 2 / 3 / 4	☐ 1-2 ☐ 1-3 ☐ 1-2-3 ☐ 1-2-3-4
		☐ W/2-BLIND PLUGS	☐ NONE

NOTE

1.

NO	PARTS	MATERIAL	REMARK
14	MOUNTING BOX	CAST ALUMINIUM ALLOY	
13	BRACKET ARM	CAST ALUMINIUM ALLOY	
12	INNER REFLECTOR	HIGH GRADE ALUMINIUM SHEET	
11	GLOBE RING	DIE CASTING ALUMINIUM	
10	BALLAST	FOR H.I.D LAMP	HIGH POWER FACTOR
9	LAMP	H.I.D LAMP	SEE SELECTION TABLE
8	LAMP HOLDER	PORCELAIN W/MOGUL SOCKET	E39
7	LAMP HOLDER GUIDE	DIE CASTING ALUMINIUM	
6	END PLATE	DIE CASTING ALUMINIUM	
5	GLOBE	HEAT RESISTANT HARD GLASS	
4	COVER	DIE CASTING ALUMINIUM	
3	BODY	DIE CASTING ALUMINIUM	
2	LOCK RING	DIE CASTING ALUMINIUM	
1	GUARD	DIE CASTING ALUMINIUM	

SCALE	N.S	APPROVED BY	
UNIT	mm	CHECKED BY	
DATE		DRAWN BY	

南北電氣株式會社
NAMBUK ELECTRIC CO.,LTD

TITLE	H.I.D LTG. FIXTURE (90° BRACKET MTG. TYPE)		APPLICATION AREA	
CAT NO.	EG M -L SERIES		CLASS OF PROTECTION	Ex d IIC T3 IP66
COLOR FINISHING	MUNSELL NO. 7.5BG 6/1.5		DRAWING NO.	NB-ELH-D1-A01

* LENGTH(L) ORDER MADE.

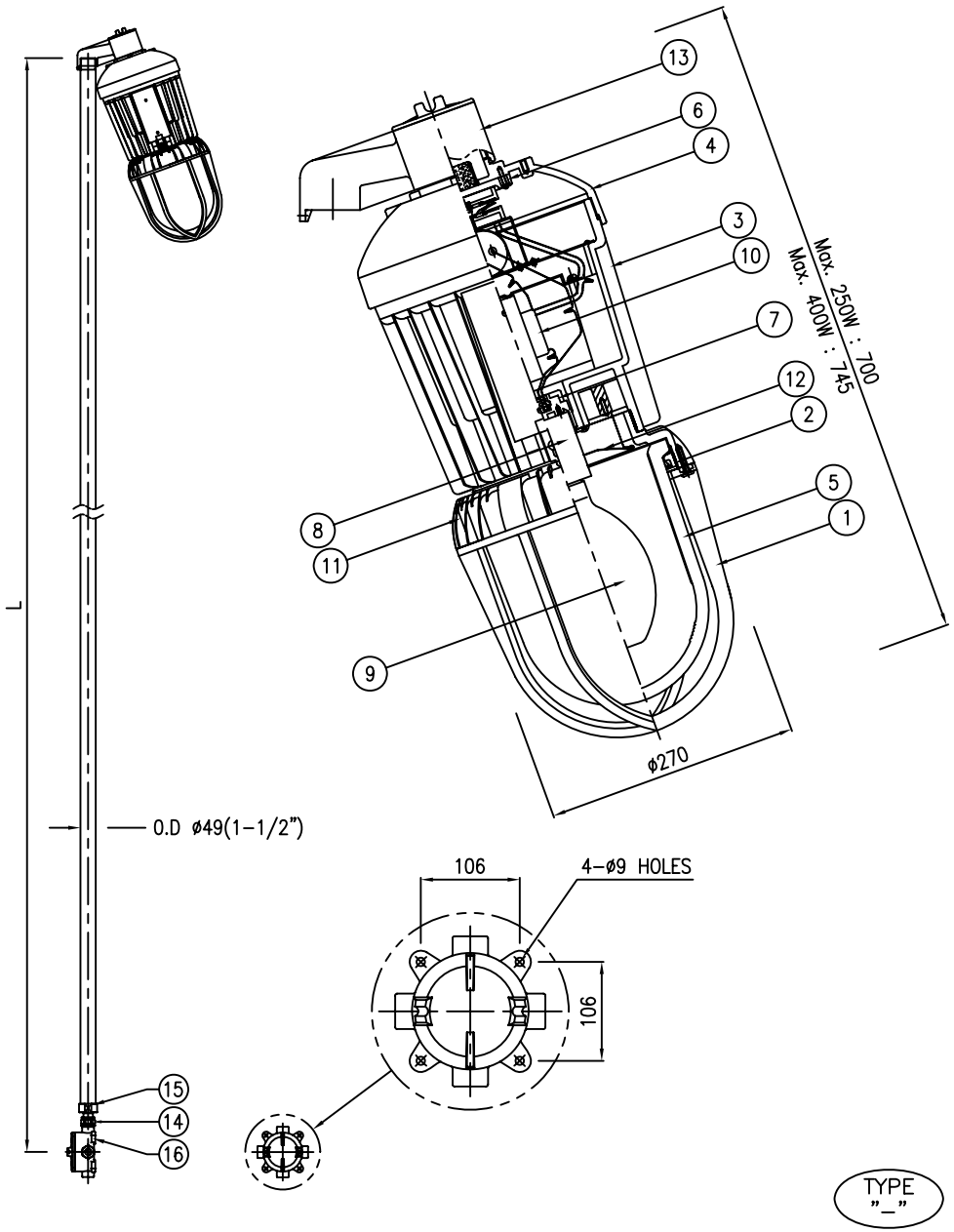

REV.NO.	DATE	DESCRIPTION	REV'D BY	CHE'D BY	APP'D BY
△					
△					
△					

SELECTION TABLE

ITEM NO.	LAMP	LAMP SIZE	Q'TY
	☐ MERCURY VAPOR	☐ 150W	– SET
		☐ 175W	– SET
	☐ H. P. SODIUM	☐ 200W	– SET
	☐ METAL HALIDE	☐ 250W	– SET

SUPPLY VOLTAGE				FREQUENCY	
	☐ AC110V	☐ AC230V			☐ 50Hz
	☐ AC120V	☐ AC240V			☐ 60Hz
	☐ AC208V	☐ AC277V			
	☐ AC220V	☐			

OPTION			
EXTERNAL REFLECTOR	☐ INCLUDED	■ EXCLUDED	
	☐ DOME TYPE	☐ 30° ANGLE	
	MATERIAL	F. R. POLYESTER	

HUB SCHEDULE		
	THREAD	☐ NPT ☐ PF ☐ MM ☐
	SIZE	☐ 3/4" ☐ 1" ☐ M25 ☐
	LOCATION	POLE (1, 2, 3) ☐ P-1 ☐ P-2 ☐ P-1-2 ☐ P-1-2-3
		☐ W/2-BLIND PLUGS ☐ NONE

NOTE

1.

NO	PARTS	MATERIAL	REMARK
16	MOUNTING BOX	CAST ALUMINIUM ALLOY	
15	SOCKET	CARBON STEEL	
14	UNION COUPLING	CARBON STEEL	
13	STANCHION HOOD	CAST ALUMINIUM ALLOY	
12	INNER REFLECTOR	HIGH GRADE ALUMINIUM SHEET	
11	GLOBE RING	DIE CASTING ALUMINIUM	
10	BALLAST	FOR H.I.D LAMP	HIGH POWER FACTOR
9	LAMP	H.I.D LAMP	SEE SELECTION TABLE
8	LAMP HOLDER	PORCELAIN W/MOGUL SOCKET	E39
7	LAMP HOLDER GUIDE	DIE CASTING ALUMINIUM	
6	END PLATE	DIE CASTING ALUMINIUM	
5	GLOBE	HEAT RESISTANT HARD GLASS	
4	COVER	DIE CASTING ALUMINIUM	
3	BODY	DIE CASTING ALUMINIUM	
2	LOCK RING	DIE CASTING ALUMINIUM	
1	GUARD	DIE CASTING ALUMINIUM	

SCALE	N.S	APPROVED BY	
UNIT	mm	CHECKED BY	
DATE		DRAWN BY	

南北電氣株式會社
NAMBUK ELECTRIC CO.,LTD

TITLE	H.I.D LTG. FIXTURE (HAND RAIL TYPE)		APPLICATION AREA	
CAT NO.	EG M -L SERIES		CLASS OF PROTECTION	Ex d IIC T3 IP66
COLOR FINISHING	LTG. FIXTURE : MUNSELL NO. 7.5BG 6/1.5 POLE : HOT DIP GALVANIZED		DRAWING NO.	NB-ELH-D1-A01

* LENGTH(L) ORDER MADE.

TYPE "–"

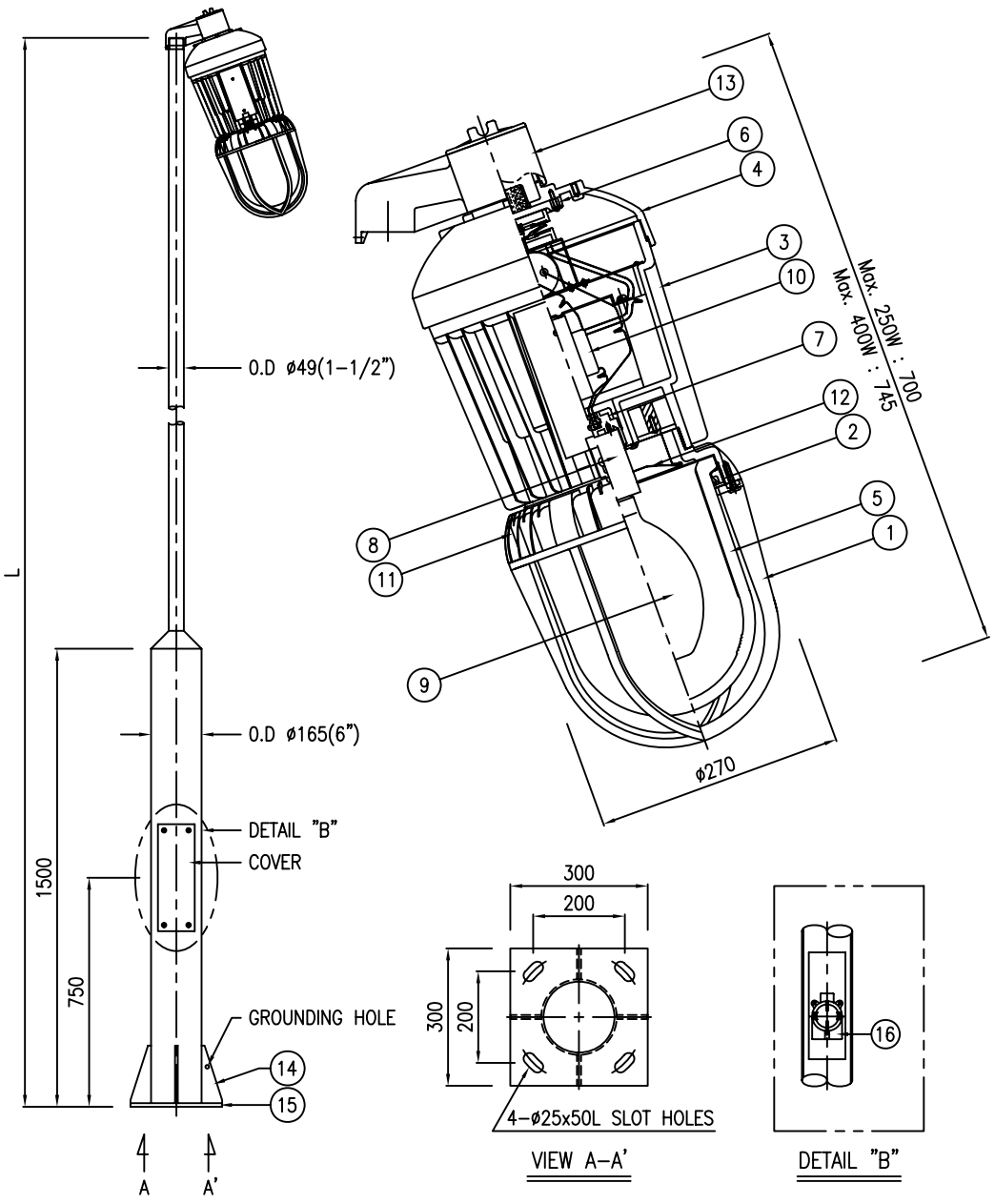

VIEW A–A'

DETAIL "B"

REV.NO.	DATE	DESCRIPTION	REV'D BY	CHE'D BY	APP'D BY
△					
△					
△					

SELECTION TABLE

ITEM NO.	LAMP	LAMP SIZE	Q'TY
	☐ MERCURY VAPOR	☐ 150W	– SET
		☐ 175W	– SET
	☐ H. P. SODIUM	☐ 200W	– SET
	☐ METAL HALIDE	☐ 250W	– SET

SUPPLY VOLTAGE				FREQUENCY	
	☐ AC110V	☐ AC230V		☐ 50Hz	
	☐ AC120V	☐ AC240V		☐ 60Hz	
	☐ AC208V	☐ AC277V			
	☐ AC220V	☐			

OPTION			
EXTERNAL REFLECTOR	☐ INCLUDED	■ EXCLUDED	
	☐ DOME TYPE	☐ 30° ANGLE	
	MATERIAL	F. R. POLYESTER	

HUB SCHEDULE		
	THREAD	☐ NPT ☐ PF ☐ MM ☐
	SIZE	☐ 3/4" ☐ 1" ☐ M25 ☐
	LOCATION	LIGHTING ☐ L–1 ☐ L–2 ☐ L–1–2 (1 2)
		☐ W/2–BLIND PLUGS ☐ NONE

NOTE

1.

NO	PARTS	MATERIAL	REMARK
16	JUNCTION BOX	CAST ALUMINIUM ALLOY	
15	BASE PLATE	STEEL PLATE	12.0t
14	SUPPORT	STEEL PLATE	9.0t
13	STANCHION HOOD	CAST ALUMINIUM ALLOY	
12	INNER REFLECTOR	HIGH GRADE ALUMINIUM SHEET	
11	GLOBE RING	DIE CASTING ALUMINIUM	
10	BALLAST	FOR H.I.D LAMP	HIGH POWER FACTOR
9	LAMP	H.I.D LAMP	SEE SELECTION TABLE
8	LAMP HOLDER	PORCELAIN W/MOGUL SOCKET	E39
7	LAMP HOLDER GUIDE	DIE CASTING ALUMINIUM	
6	END PLATE	DIE CASTING ALUMINIUM	
5	GLOBE	HEAT RESISTANT HARD GLASS	
4	COVER	DIE CASTING ALUMINIUM	
3	BODY	DIE CASTING ALUMINIUM	
2	LOCK RING	DIE CASTING ALUMINIUM	
1	GUARD	DIE CASTING ALUMINIUM	

SCALE	N.S	APPROVED BY	
UNIT	mm	CHECKED BY	
DATE		DRAWN BY	

南北電氣株式會社
NAMBUK ELECTRIC CO.,LTD

TITLE	H.I.D LTG. FIXTURE (PEDESTAL TYPE)		APPLICATION AREA	
CAT NO.	EG M –L SERIES		CLASS OF PROTECTION	Ex d IIC T3 IP66
COLOR FINISHING	LTG. FIXTURE : MUNSELL NO. 7.5BG 6/1.5 POLE : HOT DIP GALVANIZED		DRAWING NO.	NB–ELH–D1–A01

REV.NO.	DATE	DESCRIPTION	REV'D BY	CHE'D BY	APP'D BY
△					
△					
△					

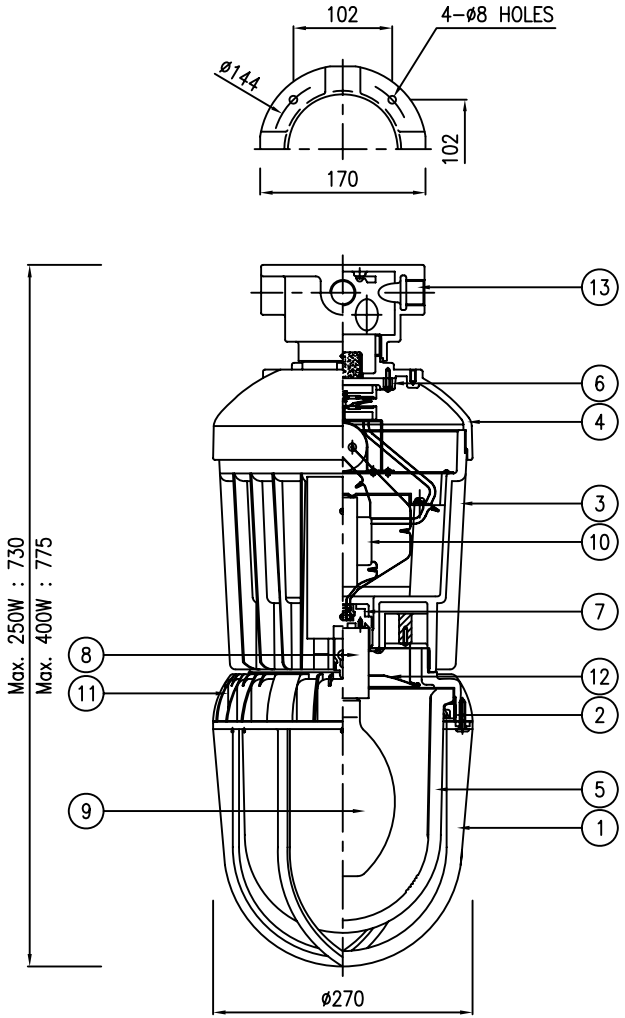

TYPE "_"

SELECTION TABLE

ITEM NO.	LAMP	LAMP SIZE	Q'TY
	☐ MERCURY VAPOR	☐ 250W	– SET
		☐ 400W	– SET
	☐ H. P. SODIUM		
	☐ METAL HALIDE		

SUPPLY VOLTAGE				FREQUENCY	
	☐ AC110V	☐ AC230V		☐ 50Hz	
	☐ AC120V	☐ AC240V		☐ 60Hz	
	☐ AC208V	☐ AC277V			
	☐ AC220V	☐			

OPTION			
EXTERNAL REFLECTOR	☐ INCLUDED	■ EXCLUDED	
	☐ DOME TYPE	☐ 30° ANGLE	
	MATERIAL	F. R. POLYESTER	

HUB SCHEDULE			
	THREAD	☐ NPT ☐ PF ☐ MM ☐	
	SIZE	☐ 3/4" ☐ 1" ☐ M25 ☐	
	LOCATION	1 / 2 / 3 / 4	☐ 1–2 ☐ 1–3 ☐ 1–2–3 ☐ 1–2–3–4
		☐ W/2–BLIND PLUGS	☐ NONE

NOTE

1.

NO	PARTS	MATERIAL	REMARK
13	MOUNTING BOX	CAST ALUMINIUM ALLOY	
12	INNER REFLECTOR	HIGH GRADE ALUMINIUM SHEET	
11	GLOBE RING	CAST ALUMINIUM ALLOY	
10	BALLAST	FOR H.I.D LAMP	HIGH POWER FACTOR
9	LAMP	H.I.D LAMP	SEE SELECTION TABLE
8	LAMP HOLDER	PORCELAIN W/MOGUL SOCKET	E39
7	LAMP HOLDER GUIDE	DIE CASTING ALUMINIUM	
6	END PLATE	DIE CASTING ALUMINIUM	
5	GLOBE	HEAT RESISTANT HARD GLASS	
4	COVER	DIE CASTING ALUMINIUM	
3	BODY	DIE CASTING ALUMINIUM	
2	LOCK RING	DIE CASTING ALUMINIUM	
1	GUARD	DIE CASTING ALUMINIUM	

SCALE	N.S	APPROVED BY	
UNIT	mm	CHECKED BY	
DATE		DRAWN BY	

南北電氣株式會社
NAMBUK ELECTRIC CO.,LTD

TITLE	H.I.D LTG. FIXTURE (CEILING MTG. TYPE)		APPLICATION AREA	
CAT NO.	EG L –L SERIES		CLASS OF PROTECTION	Ex d IIC T3 IP66
COLOR FINISHING	MUNSELL NO. 7.5BG 6/1.5		DRAWING NO.	NB-ELH-D1-A01

* LENGTH(L) ORDER MADE.

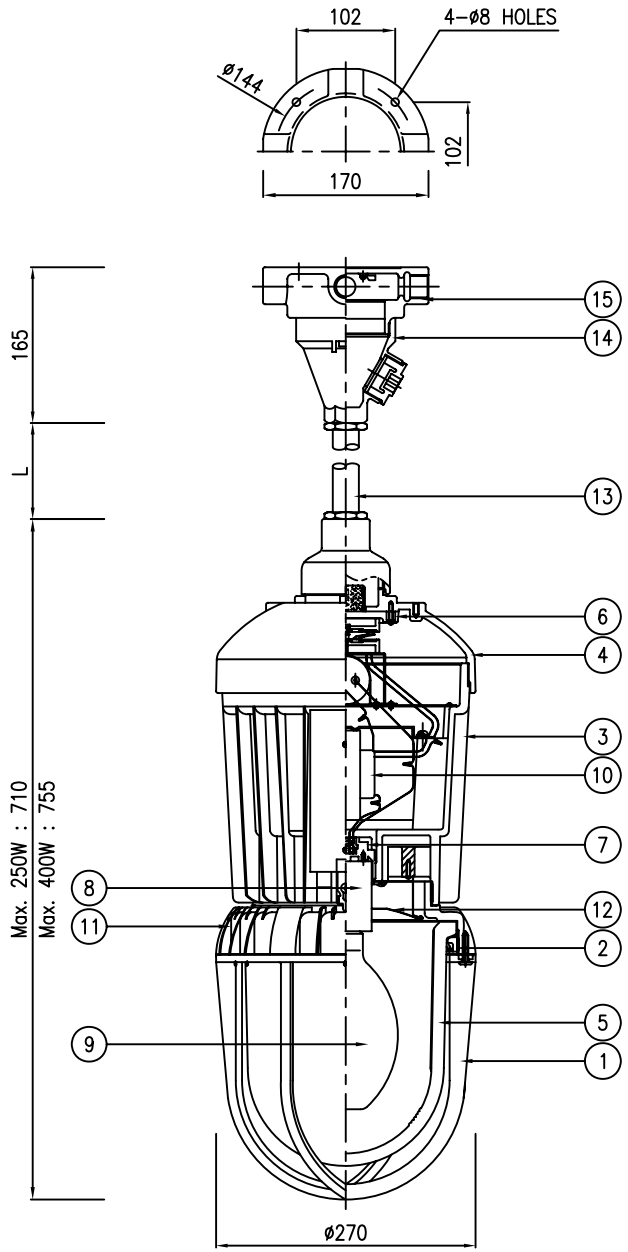

TYPE "_"

REV.NO.	DATE	DESCRIPTION	REV'D BY	CHE'D BY	APP'D BY
△					
△					
△					

SELECTION TABLE

ITEM NO.	LAMP	LAMP SIZE	Q'TY
	☐ MERCURY VAPOR	☐ 250W	– SET
		☐ 400W	– SET
	☐ H. P. SODIUM		
	☐ METAL HALIDE		

SUPPLY VOLTAGE				FREQUENCY	
☐ AC110V	☐ AC230V			☐ 50Hz	
☐ AC120V	☐ AC240V			☐ 60Hz	
☐ AC208V	☐ AC277V				
☐ AC220V	☐				

OPTION			
EXTERNAL REFLECTOR	☐ INCLUDED	■ EXCLUDED	
	☐ DOME TYPE	☐ 30° ANGLE	
	MATERIAL	F. R. POLYESTER	

HUB SCHEDULE		
THREAD	☐ NPT ☐ PF ☐ MM ☐	
SIZE	☐ 3/4" ☐ 1" ☐ M25 ☐	
LOCATION	1 / 2 / 3 / 4	☐ 1–2 ☐ 1–3 ☐ 1–2–3 ☐ 1–2–3–4
	☐ W/2–BLIND PLUGS	☐ NONE

NOTE

1.

NO	PARTS	MATERIAL	REMARK
15	MOUNTING BOX	CAST ALUMINIUM ALLOY	
14	FLANGE	DIE CASTING ALUMINIUM	
13	SUSPENSION STEM	HEAVY GAUGE STEEL PIPE	
12	INNER REFLECTOR	HIGH GRADE ALUMINIUM SHEET	
11	GLOBE RING	CAST ALUMINIUM ALLOY	
10	BALLAST	FOR H.I.D LAMP	HIGH POWER FACTOR
9	LAMP	H.I.D LAMP	SEE SELECTION TABLE
8	LAMP HOLDER	PORCELAIN W/MOGUL SOCKET	E39
7	LAMP HOLDER GUIDE	DIE CASTING ALUMINIUM	
6	END PLATE	DIE CASTING ALUMINIUM	
5	GLOBE	HEAT RESISTANT HARD GLASS	
4	COVER	DIE CASTING ALUMINIUM	
3	BODY	DIE CASTING ALUMINIUM	
2	LOCK RING	DIE CASTING ALUMINIUM	
1	GUARD	DIE CASTING ALUMINIUM	

SCALE	N.S	APPROVED BY	
UNIT	mm	CHECKED BY	
DATE		DRAWN BY	

南北電氣株式會社
NAMBUK ELECTRIC CO.,LTD

TITLE	H.I.D LTG. FIXTURE (PENDANT MTG. TYPE)		APPLICATION AREA	
CAT NO.	EG L –L SERIES	CLASS OF PROTECTION	Ex d IIC T3 IP66	
COLOR FINISHING	MUNSELL NO. 7.5BG 6/1.5	DRAWING NO.	NB-ELH-D1-A01	

REV.NO.	DATE	DESCRIPTION	REV'D BY	CHE'D BY	APP'D BY
△					
△					
△					

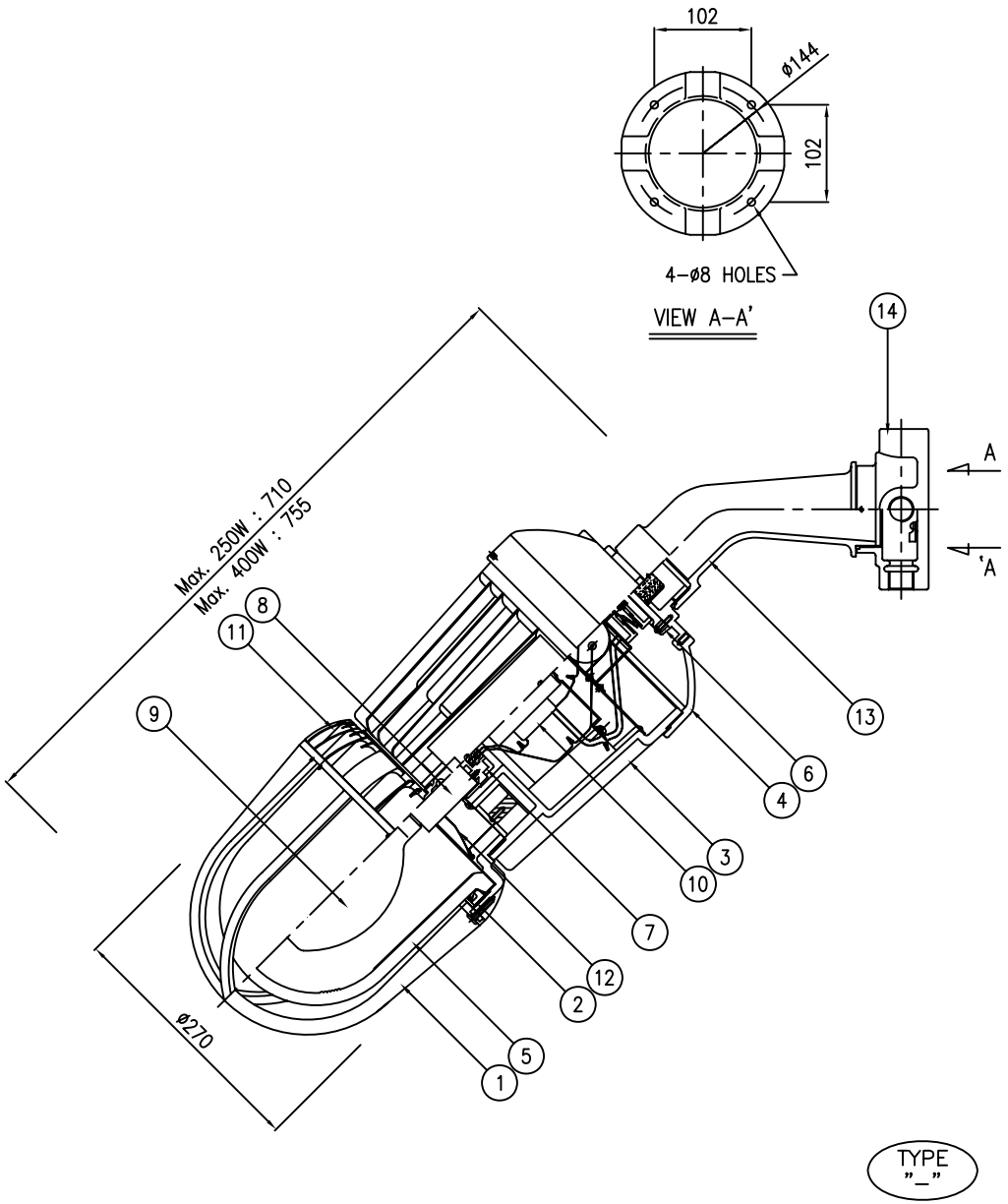

TYPE "_"

SELECTION TABLE

ITEM NO.	LAMP	LAMP SIZE	Q'TY
	☐ MERCURY VAPOR	☐ 250W	– SET
		☐ 400W	– SET
	☐ H. P. SODIUM		
	☐ METAL HALIDE		

SUPPLY VOLTAGE				FREQUENCY	
	☐ AC110V	☐ AC230V		☐ 50Hz	
	☐ AC120V	☐ AC240V		☐ 60Hz	
	☐ AC208V	☐ AC277V			
	☐ AC220V	☐			

OPTION			
EXTERNAL REFLECTOR	☐ INCLUDED	■ EXCLUDED	
	☐ DOME TYPE	☐ 30° ANGLE	
	MATERIAL	F. R. POLYESTER	

HUB SCHEDULE			
	THREAD	☐ NPT ☐ PF ☐ MM ☐	
	SIZE	☐ 3/4" ☐ 1" ☐ M25 ☐	
	LOCATION	1 / 2 / 3 / 4	☐ 1-2 ☐ 1-3 ☐ 1-2-3 ☐ 1-2-3-4
		☐ W/2-BLIND PLUGS	☐ NONE

NOTE
1.

NO	PARTS	MATERIAL	REMARK
14	MOUNTING BOX	CAST ALUMINIUM ALLOY	
13	BRACKET ARM	CAST ALUMINIUM ALLOY	
12	INNER REFLECTOR	HIGH GRADE ALUMINIUM SHEET	
11	GLOBE RING	CAST ALUMINIUM ALLOY	
10	BALLAST	FOR H.I.D LAMP	HIGH POWER FACTOR
9	LAMP	H.I.D LAMP	SEE SELECTION TABLE
8	LAMP HOLDER	PORCELAIN W/MOGUL SOCKET	E39
7	LAMP HOLDER GUIDE	DIE CASTING ALUMINIUM	
6	END PLATE	DIE CASTING ALUMINIUM	
5	GLOBE	HEAT RESISTANT HARD GLASS	
4	COVER	DIE CASTING ALUMINIUM	
3	BODY	DIE CASTING ALUMINIUM	
2	LOCK RING	DIE CASTING ALUMINIUM	
1	GUARD	DIE CASTING ALUMINIUM	

SCALE	N.S	APPROVED BY	
UNIT	mm	CHECKED BY	
DATE		DRAWN BY	

南北電氣株式會社
NAMBUK ELECTRIC CO.,LTD

TITLE	H.I.D LTG. FIXTURE (BRACKET MTG. TYPE)		APPLICATION AREA	
CAT NO.	EG L -L SERIES	CLASS OF PROTECTION	Ex d IIC T3 IP66	
COLOR FINISHING	MUNSELL NO. 7.5BG 6/1.5	DRAWING NO.	NB-ELH-D1-A01	

REV.NO.	DATE	DESCRIPTION	REV'D BY	CHE'D BY	APP'D BY
△					
△					
△					

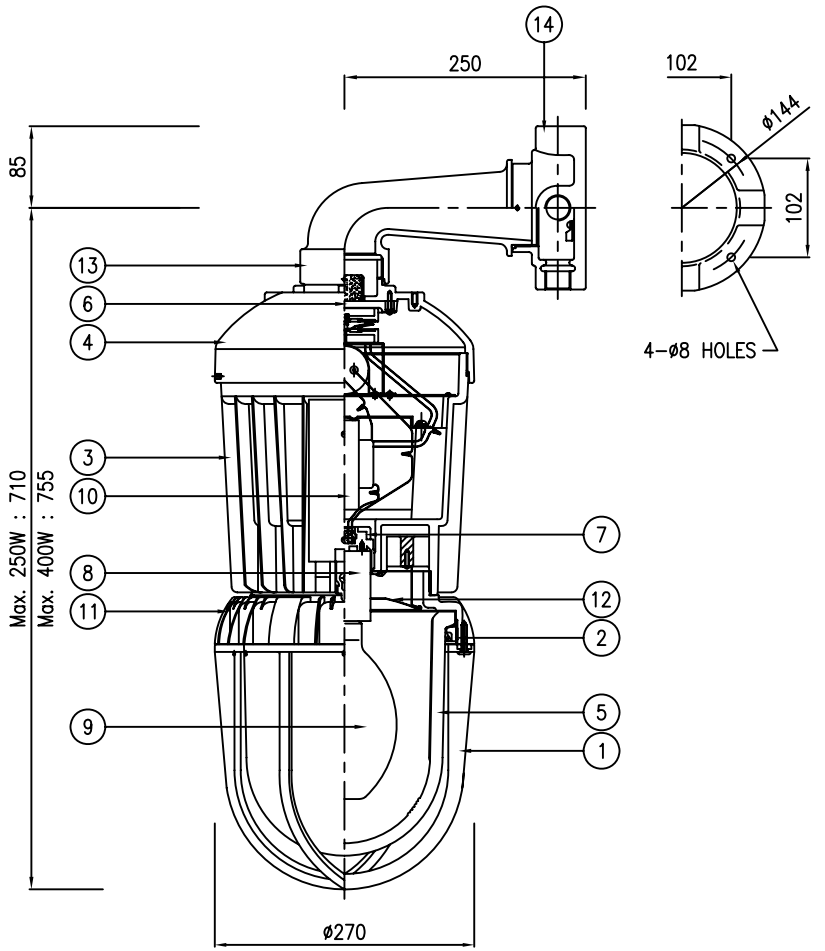

TYPE "_"

SELECTION TABLE

ITEM NO.	LAMP	LAMP SIZE	Q'TY
	☐ MERCURY VAPOR	☐ 250W	– SET
		☐ 400W	– SET
	☐ H. P. SODIUM		
	☐ METAL HALIDE		

SUPPLY VOLTAGE				FREQUENCY	
☐ AC110V	☐ AC230V			☐ 50Hz	
☐ AC120V	☐ AC240V			☐ 60Hz	
☐ AC208V	☐ AC277V				
☐ AC220V	☐				

OPTION			
EXTERNAL REFLECTOR	☐ INCLUDED	■ EXCLUDED	
	☐ DOME TYPE	☐ 30° ANGLE	
	MATERIAL	F. R. POLYESTER	

HUB SCHEDULE			
THREAD	☐ NPT	☐ PF	☐ MM ☐
SIZE	☐ 3/4"	☐ 1"	☐ M25 ☐
LOCATION	1 / 2 / 3 / 4	☐ 1-2	☐ 1-3
		☐ 1-2-3	☐ 1-2-3-4
	☐ W/2-BLIND PLUGS	☐ NONE	

NOTE

1.

NO	PARTS	MATERIAL	REMARK
14	MOUNTING BOX	CAST ALUMINIUM ALLOY	
13	BRACKET ARM	CAST ALUMINIUM ALLOY	
12	INNER REFLECTOR	HIGH GRADE ALUMINIUM SHEET	
11	GLOBE RING	CAST ALUMINIUM ALLOY	
10	BALLAST	FOR H.I.D LAMP	HIGH POWER FACTOR
9	LAMP	H.I.D LAMP	SEE SELECTION TABLE
8	LAMP HOLDER	PORCELAIN W/MOGUL SOCKET	E39
7	LAMP HOLDER GUIDE	DIE CASTING ALUMINIUM	
6	END PLATE	DIE CASTING ALUMINIUM	
5	GLOBE	HEAT RESISTANT HARD GLASS	
4	COVER	DIE CASTING ALUMINIUM	
3	BODY	DIE CASTING ALUMINIUM	
2	LOCK RING	DIE CASTING ALUMINIUM	
1	GUARD	DIE CASTING ALUMINIUM	

SCALE	N.S	APPROVED BY	
UNIT	mm	CHECKED BY	
DATE		DRAWN BY	

南北電氣株式會社
NAMBUK ELECTRIC CO.,LTD

TITLE	H.I.D LTG. FIXTURE (90° BRACKET MTG. TYPE)		APPLICATION AREA	
CAT NO.	EG L -L SERIES		CLASS OF PROTECTION	Ex d IIC T3 IP66
COLOR FINISHING	MUNSELL NO. 7.5BG 6/1.5		DRAWING NO.	NB-ELH-D1-A01

* LENGTH(L) ORDER MADE.

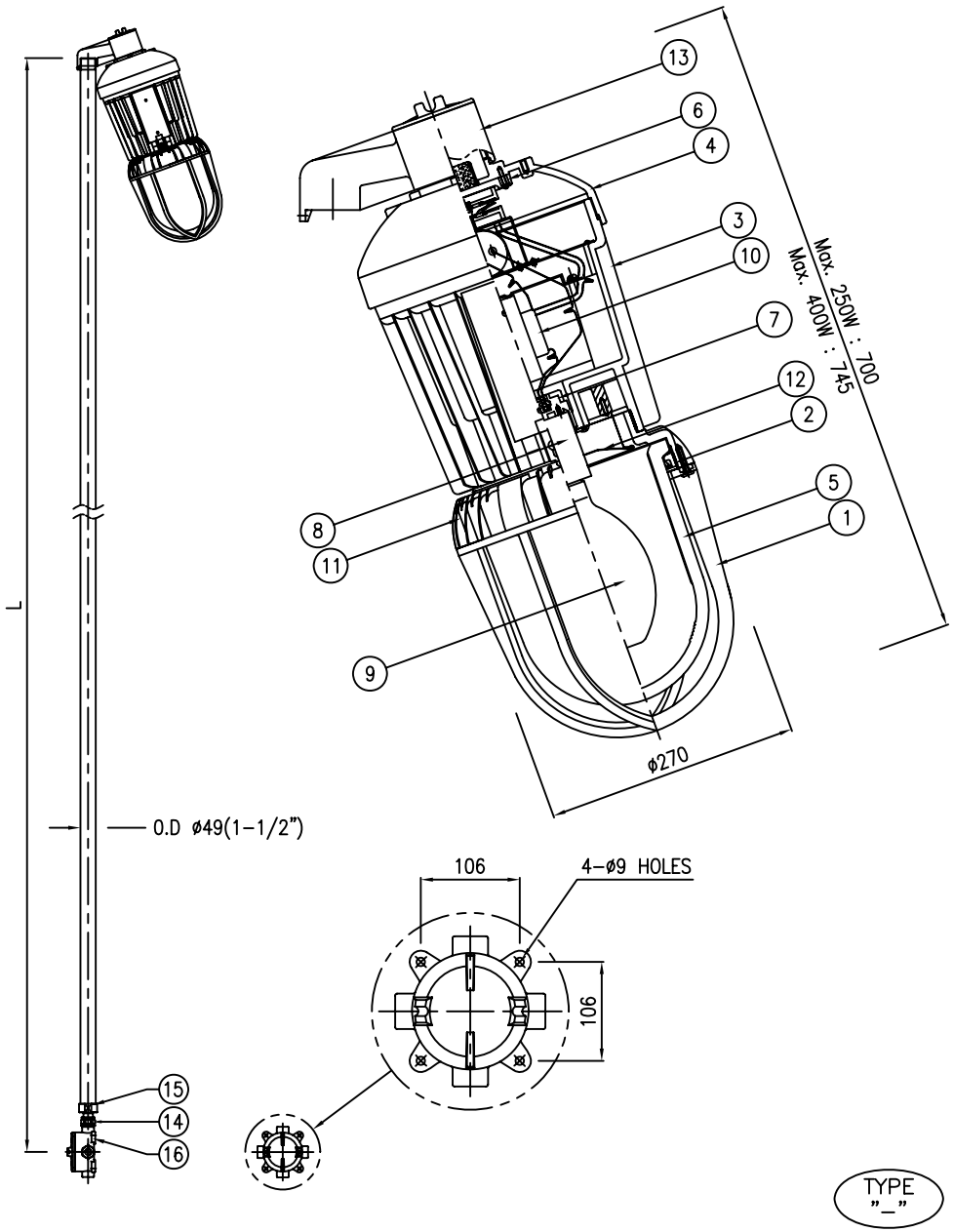

TYPE "_"

REV.NO.	DATE	DESCRIPTION	REV'D BY	CHE'D BY	APP'D BY
△					
△					
△					

SELECTION TABLE

ITEM NO.	LAMP	LAMP SIZE	Q'TY
	☐ MERCURY VAPOR	☐ 250W	– SET
		☐ 400W	– SET
	☐ H. P. SODIUM		
	☐ METAL HALIDE		

SUPPLY VOLTAGE				FREQUENCY	
☐ AC110V	☐ AC230V			☐ 50Hz	
☐ AC120V	☐ AC240V			☐ 60Hz	
☐ AC208V	☐ AC277V				
☐ AC220V	☐				

OPTION			
EXTERNAL REFLECTOR	☐ INCLUDED	■ EXCLUDED	
	☐ DOME TYPE	☐ 30° ANGLE	
	MATERIAL	F. R. POLYESTER	

HUB SCHEDULE		
	THREAD	☐ NPT ☐ PF ☐ MM ☐
	SIZE	☐ 3/4" ☐ 1" ☐ M25 ☐
	LOCATION	POLE (1, 2, 3) ☐ P-1 ☐ P-2 ☐ P-1-2 ☐ P-1-2-3
		☐ W/2-BLIND PLUGS ☐ NONE

NOTE

1.

NO	PARTS	MATERIAL	REMARK
16	MOUNTING BOX	CAST ALUMINIUM ALLOY	
15	SOCKET	CARBON STEEL	
14	UNION COUPLING	CARBON STEEL	
13	STANCHION HOOD	CAST ALUMINIUM ALLOY	
12	INNER REFLECTOR	HIGH GRADE ALUMINIUM SHEET	
11	GLOBE RING	CAST ALUMINIUM ALLOY	
10	BALLAST	FOR H.I.D LAMP	HIGH POWER FACTOR
9	LAMP	H.I.D LAMP	SEE SELECTION TABLE
8	LAMP HOLDER	PORCELAIN W/MOGUL SOCKET	E39
7	LAMP HOLDER GUIDE	DIE CASTING ALUMINIUM	
6	END PLATE	DIE CASTING ALUMINIUM	
5	GLOBE	HEAT RESISTANT HARD GLASS	
4	COVER	DIE CASTING ALUMINIUM	
3	BODY	DIE CASTING ALUMINIUM	
2	LOCK RING	DIE CASTING ALUMINIUM	
1	GUARD	DIE CASTING ALUMINIUM	

SCALE	N.S	APPROVED BY	
UNIT	mm	CHECKED BY	
DATE		DRAWN BY	

南北電氣株式會社
NAMBUK ELECTRIC CO.,LTD

TITLE	H.I.D LTG. FIXTURE (HAND RAIL TYPE)		APPLICATION AREA	
CAT NO.	EG L -L SERIES		CLASS OF PROTECTION	Ex d IIC T3 IP66
COLOR FINISHING	LTG. FIXTURE : MUNSELL NO. 7.5BG 6/1.5 POLE : HOT DIP GALVANIZED		DRAWING NO.	NB-ELH-D1-A01

* LENGTH(L) ORDER MADE.

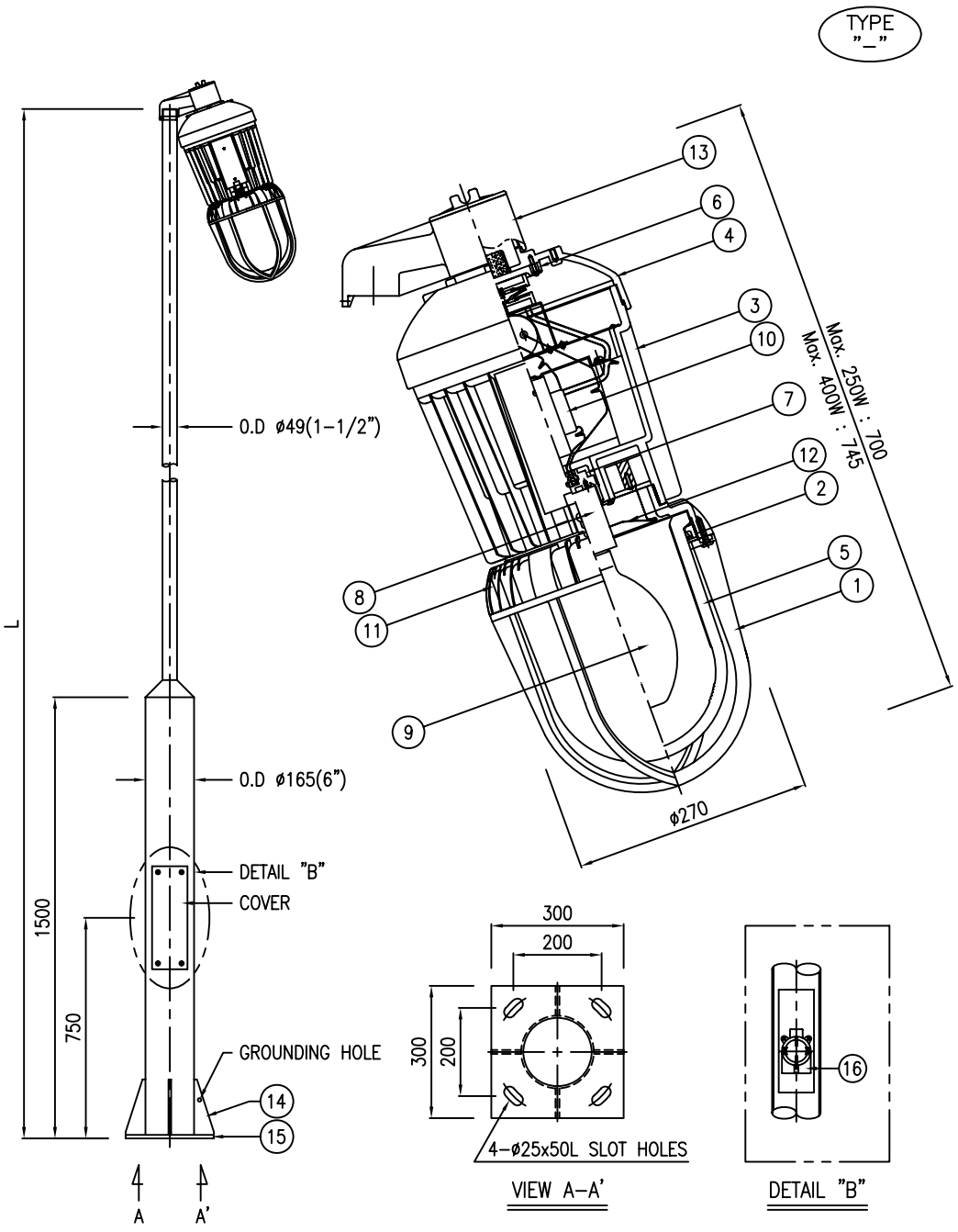

REV.NO.	DATE	DESCRIPTION	REV'D BY	CHE'D BY	APP'D BY
△					
△					
△					

SELECTION TABLE

ITEM NO.	LAMP	LAMP SIZE	Q'TY
	☐ MERCURY VAPOR	☐ 250W	– SET
		☐ 400W	– SET
	☐ H. P. SODIUM		
	☐ METAL HALIDE		

SUPPLY VOLTAGE				FREQUENCY	
☐ AC110V	☐ AC230V			☐ 50Hz	
☐ AC120V	☐ AC240V			☐ 60Hz	
☐ AC208V	☐ AC277V				
☐ AC220V	☐				

OPTION			
EXTERNAL REFLECTOR	☐ INCLUDED	■ EXCLUDED	
	☐ DOME TYPE	☐ 30° ANGLE	
	MATERIAL	F. R. POLYESTER	

HUB SCHEDULE		
THREAD	☐ NPT ☐ PF ☐ MM ☐	
SIZE	☐ 3/4" ☐ 1" ☐ M25 ☐	
LOCATION	LIGHTING 1 2	☐ L–1 ☐ L–2 ☐ L–1–2
	☐ W/2–BLIND PLUGS	☐ NONE

NOTE

1.

NO	PARTS	MATERIAL	REMARK
16	JUNCTION BOX	CAST ALUMINIUM ALLOY	
15	BASE PLATE	STEEL PLATE	12.0t
14	SUPPORT	STEEL PLATE	9.0t
13	STANCHION HOOD	CAST ALUMINIUM ALLOY	
12	INNER REFLECTOR	HIGH GRADE ALUMINIUM SHEET	
11	GLOBE RING	CAST ALUMINIUM ALLOY	
10	BALLAST	FOR H.I.D LAMP	HIGH POWER FACTOR
9	LAMP	H.I.D LAMP	SEE SELECTION TABLE
8	LAMP HOLDER	PORCELAIN W/MOGUL SOCKET	E39
7	LAMP HOLDER GUIDE	DIE CASTING ALUMINIUM	
6	END PLATE	DIE CASTING ALUMINIUM	
5	GLOBE	HEAT RESISTANT HARD GLASS	
4	COVER	DIE CASTING ALUMINIUM	
3	BODY	DIE CASTING ALUMINIUM	
2	LOCK RING	DIE CASTING ALUMINIUM	
1	GUARD	DIE CASTING ALUMINIUM	

SCALE	N.S	APPROVED BY	
UNIT	mm	CHECKED BY	
DATE		DRAWN BY	

南北電氣株式會社
NAMBUK ELECTRIC CO.,LTD

TITLE	H.I.D LTG. FIXTURE (PEDESTAL TYPE)		APPLICATION AREA	
CAT NO.	EG L –L SERIES		CLASS OF PROTECTION	Ex d IIC T3 IP66
COLOR FINISHING	LTG. FIXTURE : MUNSELL NO. 7.5BG 6/1.5 POLE : HOT DIP GALVANIZED		DRAWING NO.	NB–ELH–D1–A01