SMDKC520 Product Guide Book

SMDKC520 board is
the offical reference board
of Samsung Exynos5250 System

Smile with you.

www.yicsystem.com

YIC SYSTEM

INTRODUCTION



SMDKC520

- Samsung Exynos 5250 System Reference Board.

- SMDKC520 board is the offical reference board of Samsung Exynos5250 System.

OVERVIEW

The SMDKC520 (Exynos5250 Development Kit) highlights
the basic system-based hardware design which uses the Exynos5250.
It can evaluate the basic operations of the Exynos5250 and assist in Developing codes.

High Light

1. Interface Ports

SMDKC520 provides many interface port so that you can check and test the processor functions.



Base Board

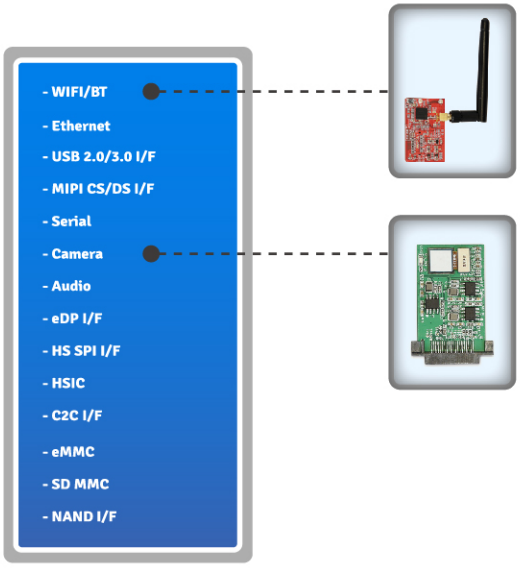

2. Exynos5250

Samsung Exynos5250, high speed Cortex-A15 Dual Core, is on Board

3. Android OS

Android Image is supplied with the board. If you need Android BSP, you could get it after NDA with Samsung.
- Android ICS 4.04
- Android JellyBean 4.2 (03' 2013)

SPECIFICATION

Feature

Parts		Description	Type	Num.
CPU	S5PC520 (Exynos5250)	Samsung Cortex-A15 (Dual)	On Board	1
Memory	RAM	POP Type: 2GB LPDDR3 (Size/Type is pop-dependent)	POP on CPU	1
		SCP Type: 2GB DDR3L	On Board	2
Storage	eMMC	8GB iNAND	On Board	1
	SDMMC	SD/SDIO/MMC I/F	Socket	1
	SATA	SATA I/F	Connector	1
	EF-NAND	EF-NAND I/F	-	1
	NAND	NAND I/F	Connector (40pin Samtec)	1
COM	USB	USB 2.0 OTG	Socket	1
		USB 3.0 Host/Device	Socket	1
	Serial	RS232	9pin Female	2
	Ethernet	LAN9215 (10/100Mbps)	RJ45 JACK(Combo)	1
	Wifi/BT	WIFI/BT I/F	Connector(40pin Samtec)	1
C2C I/F	C2C I/F	C2C	Connector	1
LCD&Touch	TFT LCD&Touch	10.1 Inch TFT LCD (LVDS LCD with Capacitive Touch)	LCD module	1
Multimedia	Audio	S/PDIF 5.1 Audio, MIC, Line In, Headphone (WM9713G, WM8994)	JACK	4
	Video	HDMI 1.4 Video	JACK	1
	Camera I/F	General Camera I/F	Connector	1
	eDP I/F	eDP I/F	Connector	1
	MIPI I/F	MIPI-CSI	Connector	2
	SPI	High Speed SPI	Header	3
Others	ENIT	External INT Test point	Test Point	32
	HSIC	HSIC	Connector	4
	SLIM	SLIM BUS	Header	1
	Sensor	-	Connector	1
		Querty_Key I/F	Connector	1
		Extended Key I/F	Connector	1
	Button	Power, Reset, Int, ..	button	12
	Debug Port	JTAG 10x2	Box Header	2
	Status LEDs	LEDs	LED	21

Diagram

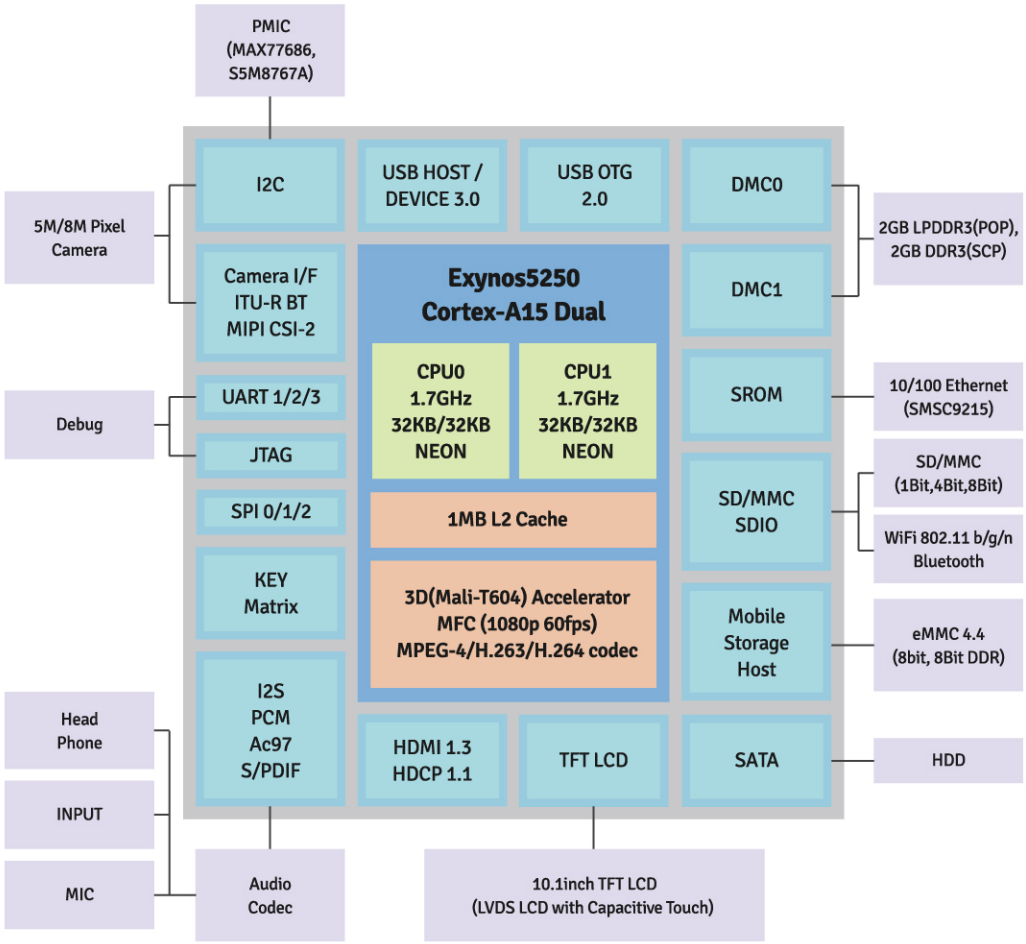

Layout

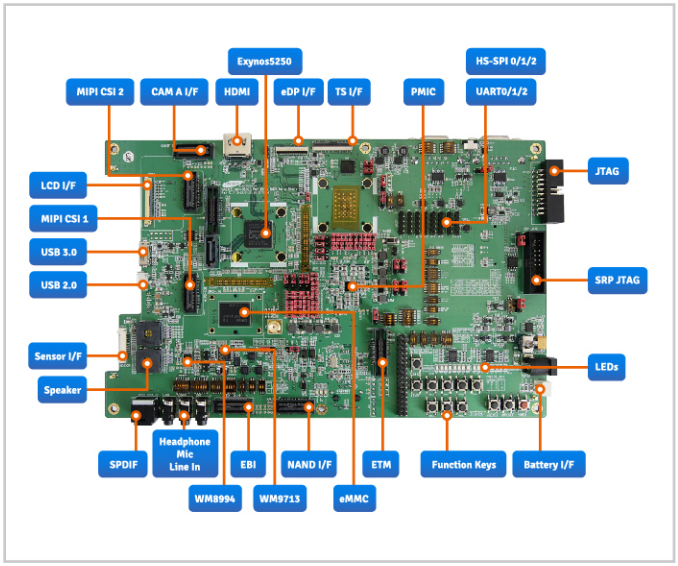

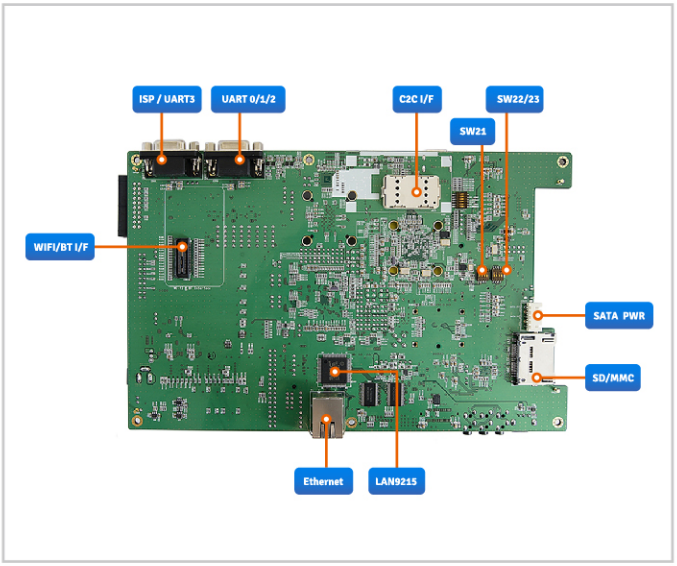

PACKAGE

Parts	Description	Num.
Main Board	SMDKC520	1
LCD Board	10.1 inch with Touch	1
Power Adapter	5V DC / 6A	1
Cable	9pin serial cable(Male/Female)	1
	USB 3.0 A/M to micro B/M	1
	USB 3.0 A/F to micro B/M gender	1
	USB 2.0 A/M to micro B/M	1
	USB 2.0 A/F to micro B cable	1
	Ethernet Cable	1
Memory	4GB SDHC	1

note 1)

Anroid Image is include in the CD but No BSP.
You should contact the Samsung Distributor
to get the BSP (NDA with Samsung required)

Accessory



9pin serial cable
(Male/Female)



Ethernet Cable



USB 3.0 A/F to micro
B/M Cable



USB 2.0 A/M
to micro B/M Cable



USB3 A/M to micro B/M



USB 2.0 A/F
to micro B/M cable



Power Adapter



SD Card

PURCHASE

sales@yicsystem.com

A/S information

Warranty Period

Emulator / Board

- Emulator : 12 Months
- Board : 6 Months
- Within in the warranty period : Free of charge
- Later than the warranty period : provide a quotation for the repair cost

YIC System shall not be liable in respect of defects in the product arising from (a) Customer error or neglect in its use or storage of the product (b) Any modification of the product made by anyone other than YIC System (c) The use of the product is combination with other equipment, software or technology not purchased or licensed from YIC System, provided that such defects would not have occurred but for such combination, modification or enhancement.

Accordingly, if upon customer's return of faulty product, it is clear that the fault has arisen out of one or more of the above set of circumstances, then YIC System reserves the rights to change the full price of any replacement unit.

A/S Procedure

Before returning the product to YIC System, the customer should contact the YIC System and provide information as below.

a) A fault description
b) The product serial number

A/S information

If you have any inquiries during using our product, please contact us by e-mail or telephone.

Address
441-814 Gyeonggi Small & Medium Business Growth Accelerating Center 3F,
111-7 Guun-dong, Gwonseon-gu, Suwon-city, Gyeonggi-do, Korea

E-mail sales@yicsystem.com
Tel +82-31-278-0461
Fax +82-31-278-0463

Smile with you.