KGU-TYPE

DIMENSIONS

KGU SERIES

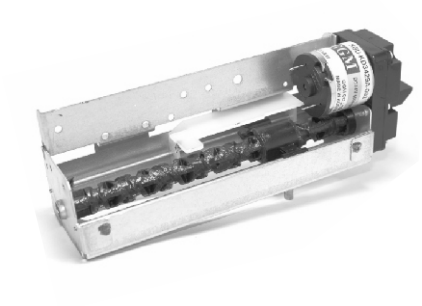

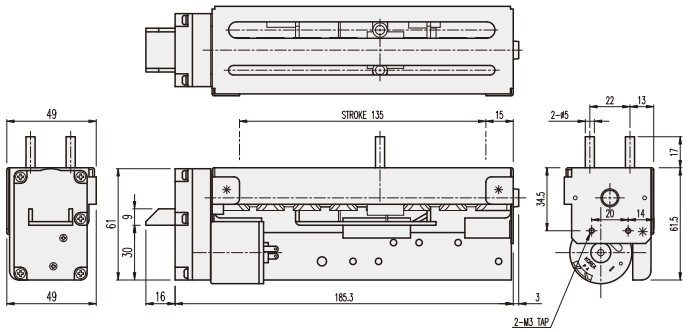

AT MAXIMUM EFFICIENCY (KGU-0035-KD3429□□)

PART / MODEL	VOLTAGE (DC)	NO LOAD				AT MAX. EFF.				STALL	
		mA	rpm	L(mm)	CYCLE/min.	kgf·cm	mA	rpm	CYCLE/min.	kgf·cm	A
KD3429S1	12V	150	140	134	10	1	250	126	9	9.2	1.7
KD3429S2	24V	100	140	134	10	1	200	126	9	9.5	1
KD3429T1	12V	200	210	134	14	1	500	168	12	10.8	3.8
KD3429T2	24V	150	210	134	14	1	200	168	12	8.2	1.2
KD3429P1	12V	250	252	134	14	2	1000	210	15	8.5	3.8
KD3429P2	24V	180	252	134	18	1	300	210	15	9	2