# BP60-TYPE

## FEATURES ;

- Accuracy guaranteed to 0.003mm TIR (0.0001" ).
- Excellent for engine lathes and CNC lathe.
- The interior houses a combination of double row angular contact bearing, thrust bearing, and radial ball bearing.
- Used both as a centering taper for hollow bodies and as a center for machining standard workpiece.




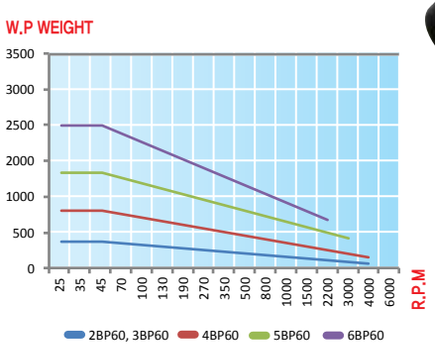


BP60 type technical data

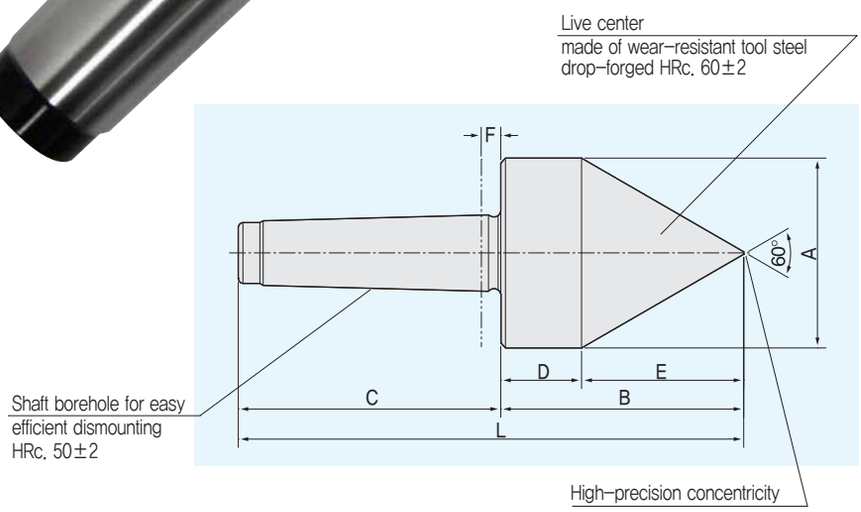


## Dimension

| 08 | 1 | 0 | 0 | MT |
|---|---|---|---|---|

Unit : mm, kg

| MODEL | MT | A | B | C | D | E | F | L | W.P Weight | Max, R.P.M | Weight | Max, Run Out |
|---|---|---|---|---|---|---|---|---|---|---|---|---|
| 081002 | 2 | 44 | 66 | 68 | 28 | 38 | 6 | 134 | 400 | 5,000 | 1.5 | 0.003 |
| 081003 | 3 | 56 | 78.5 | 85 | 30 | 48.5 | 6 | 163.5 | 400 | 5,000 | 1.5 | 0.003 |
| 081004 | 4 | 78 | 100 | 108 | 33.3 | 66.7 | 8 | 208 | 800 | 4,500 | 2.3 | 0.003 |
| 081005 | 5 | 98 | 125 | 136 | 41 | 84 | 8 | 261 | 1,600 | 3,200 | 5 | 0.003 |
| 081006 | 6 | 118 | 154 | 189 | 53 | 101 | 10 | 343 | 2,500 | 2,500 | 11.2 | 0.005 |

# BP60A-TYPE

## FEATURES ;

- Accuracy guaranteed to 0.003mm TIR (0.0001" ).
- Excellent for engine lathes and CNC lathe.
- The interior houses a combination of double row angular contact bearing, thrust bearing, and radial ball bearing.
- Used both as a centering taper for hollow bodies and as a center for machining standard workpiece.




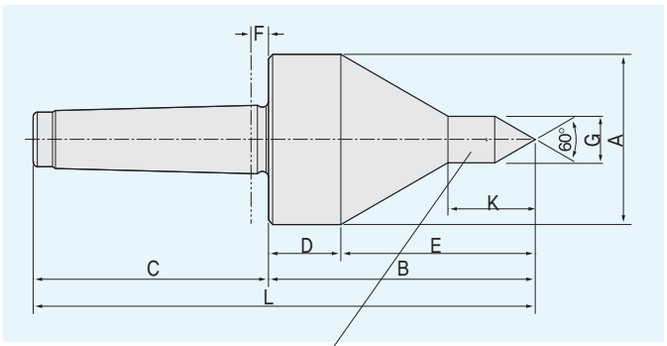


Elongated center point is specially shaped for improved tool clearance(Diagram)

## Dimension

| 08 | 5 | 0 | 0 | MT |
|---|---|---|---|---|

Unit : mm, kg

| MODEL | MT | A | B | C | D | E | F | K | G | L | W.P Weight | Max, R.P.M | Weight | Max, Run Out |
|---|---|---|---|---|---|---|---|---|---|---|---|---|---|---|
| 085002 | 2 | 44 | 79 | 68 | 32.3 | 46.7 | 6 | 19 | 12 | 147 | 320 | 5,000 | 1.0 | 0.003 |
| 085003 | 3 | 56 | 86 | 85 | 28.9 | 57.1 | 6 | 19 | 12 | 171 | 320 | 5,000 | 1.0 | 0.003 |
| 085004 | 4 | 78 | 103.5 | 108 | 26.3 | 77.2 | 8 | 23.5 | 16 | 211.5 | 560 | 4,500 | 2.3 | 0.003 |
| 085005 | 5 | 98 | 140 | 136 | 41.6 | 98.4 | 8 | 30 | 19 | 276 | 1,200 | 3,200 | 5 | 0.003 |
| 085006 | 6 | 118 | 165 | 189 | 44.3 | 120.7 | 10 | 35 | 19 | 354 | 2,000 | 2,500 | 10 | 0.005 |