DAEHAN SENSOR

Digital Liquid Indicate
with level controller

DFIC – Series
Level Indicator with analog output

Product Name
DFIC – 4U



INNOBIZ

ISO 9001 인증업체

1993 DAEHAN SENSOR CO., LTD.
All rights reserved

Table of Contents

1. Introduction 3

2. Specification 3

3. Dimensiosns 4

4. Wiring Connection 5

5. Operation 7

6. Relay Test 8

7. Display Operation 9

8. Check Point Before A/S 10

Introduction

This DFIC-4U Series Level Controller gets 4-20mA current signal output from the sensor installed in the tank and displays the level of the liquid in the tank as percentage (0~100%) at 0.5 unit.

It is very much easy to install and adjust freely on-off switch of the pump at site.

Also, it is able to monitor the status at site without using meter.

User can select one 4~20mA Analog Output (Meter), two Alarm Relays, one Control Relay as per user's purpose and circumstance.

You can change the alarm setting value by using the four keys on the front panel.

It is easy to read the values even in dark place or long distance for a 5-digit 7-segment LED is installed on the front panel.

Specification

- ▶ Display ---------- 5-Digit 8.0mm(0.315-inch) High 7-segment L.E.D
- ▶ Display update Rate ---------- 0.25 seconds
- ▶ Transducer Supply ---------- 24VDC 250m
- ▶ Operating Temperature ---------- 0℃ ~ 60℃
- ▶ Dimensions ---------- 87mm (Wide) x 155mm (High) x 69mm (Deep)
- ▶ Material ---------- Polycabonate & A.B.S
- ▶ Input Impedance ---------- 10Ω (Ohms)
- ▶ Accuracy ---------- 8bit 0.5%
- ▶ Isolation ---------- Non – isolated
- ▶ Max. Switching Current Capacitor ---------- 1250VA / 150W
- ▶ Max. Switching Voltage ---------- 250VDC / 30VDC
- ▶ Max. Switching Current ---------- 5A
- ▶ Resolution ---------- 8bit
- ▶ Maximum Load ---------- 500Ω insternally powered
- ▶ Isolation ---------- Non – isolated

Dimensions

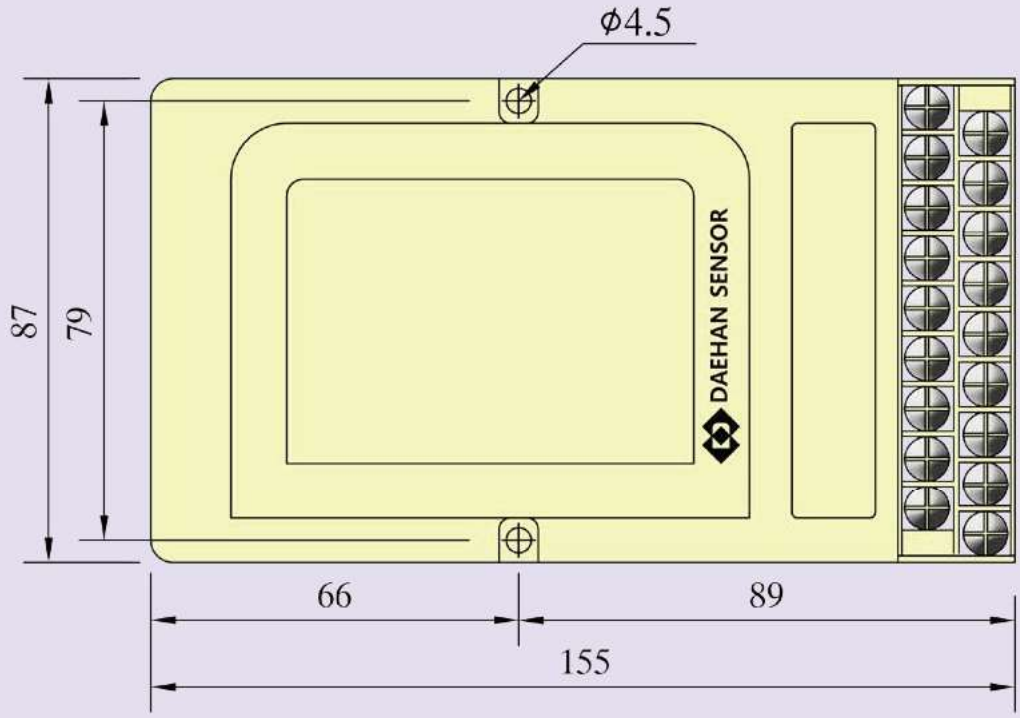

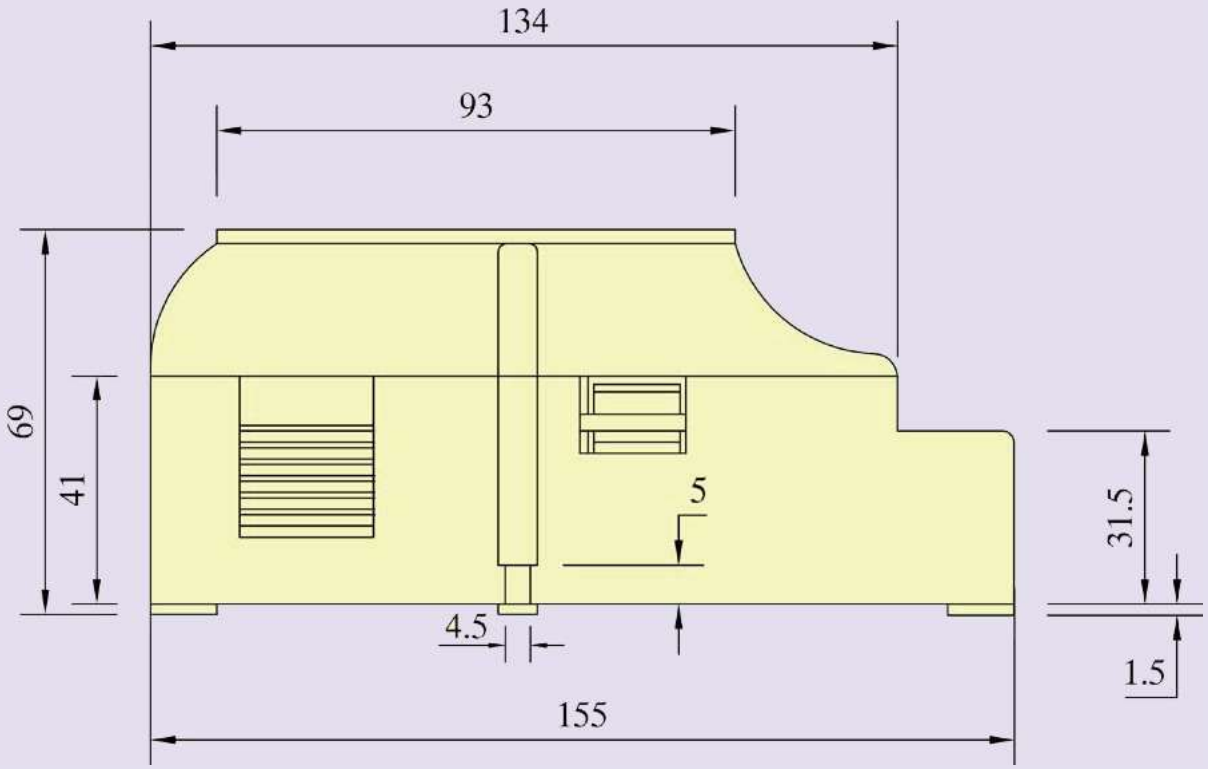

Wiring Connection

Wiring to a [Two Wire – Current Loop]

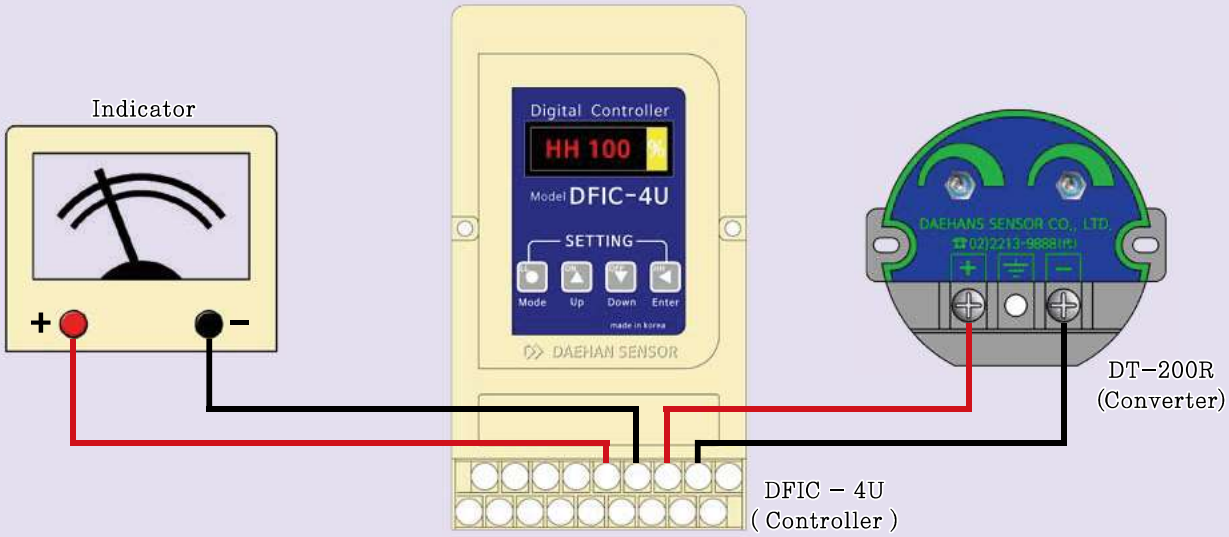

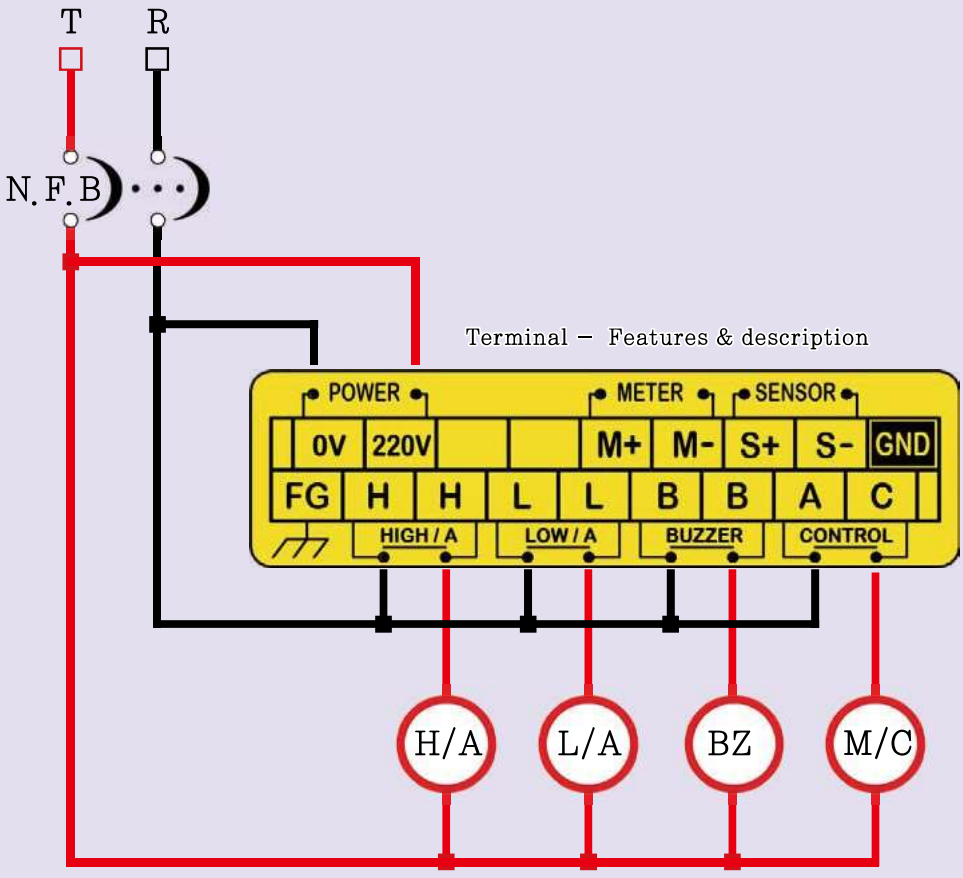

Wiring Connection

Wiring to a [Four Wire – Current Input]

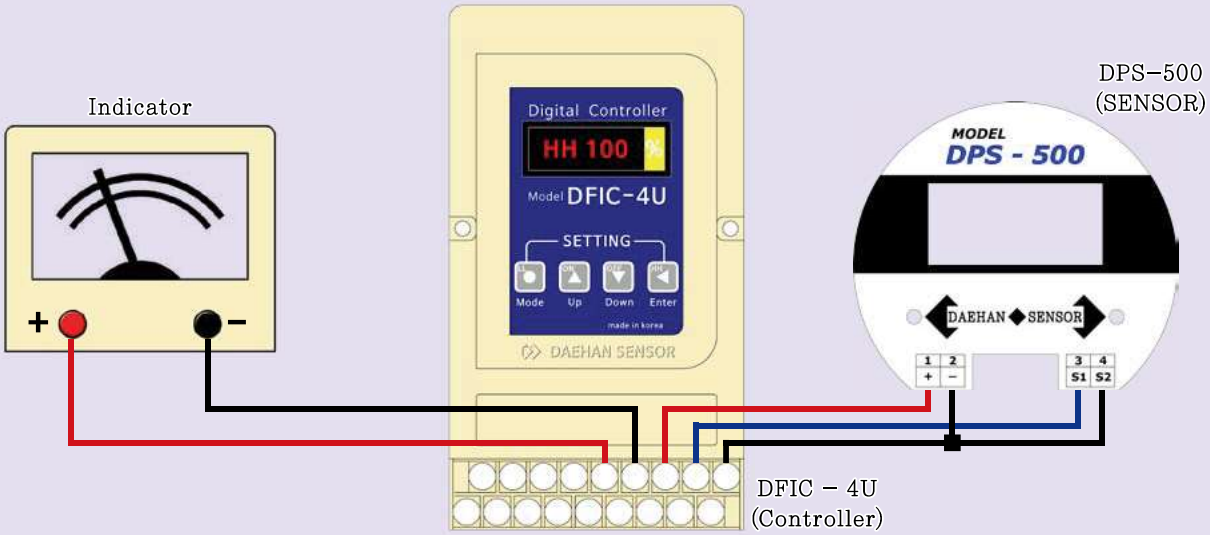

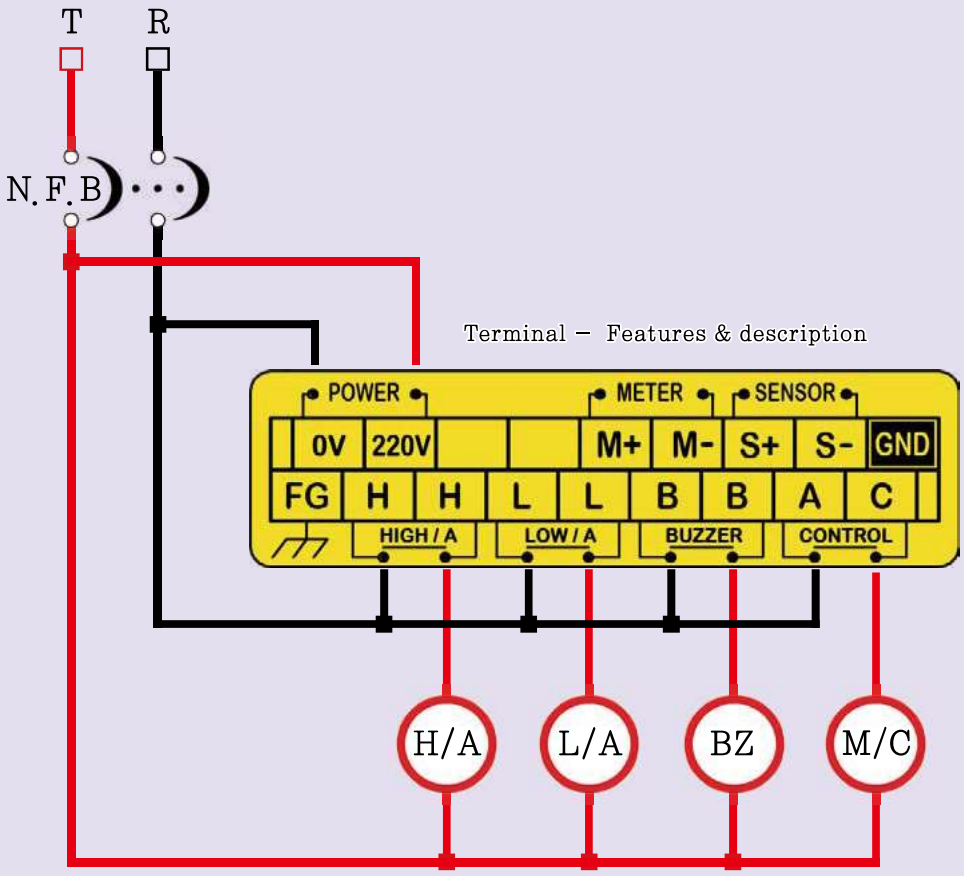

Operation

This mode is to set the position of control contact point and alarm contact point.
You can set the position of ONn and OFF points of control contact point and two alarm contact points as High Alarm Point (HH–P) and Low Alarm Point (LL–P).
You need to set correctly for as per working mode (supply or drain), the ON and OFF control contact point works contrary.

For example, in case of supply, the High Point (H–P) becomes OFF point of control contact point and the Low Point (L–P) becomes ON point.
And in case of eject (drain), the High Point (H–P) becomes ON point of control contact point and the Low Point (L–P) becomes OFF point.

HH 100 % Displays liquid level as % unit. Works relay control and current re–transmission. We call it as Basic Operation Mode

LL MODE — Moves to Alarm setting mode

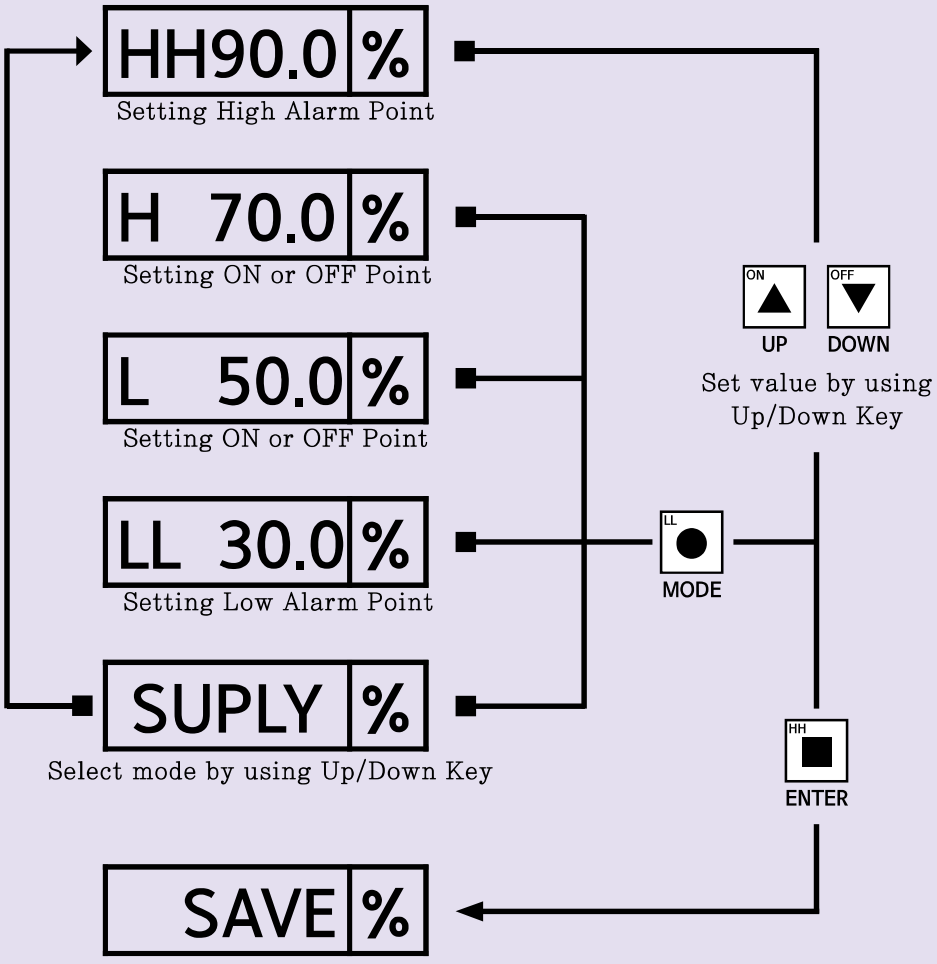

▶ The default setting of supply is as 90.00%(HH–P), 70.00%(H–P), 50.00%(L–P), 30.00%(LL–P).

▶ The value should be HH–P 〉H–P 〉L–P 〉LL–P. If the sequence is set incorrectly, error occurs.

Relay Test

This mode is to test control / alarm contact point of the controller.

HH 100 %

Displays liquid level as % unit. Works relay control and current re-transmission. We call it as Basic Operation Mode

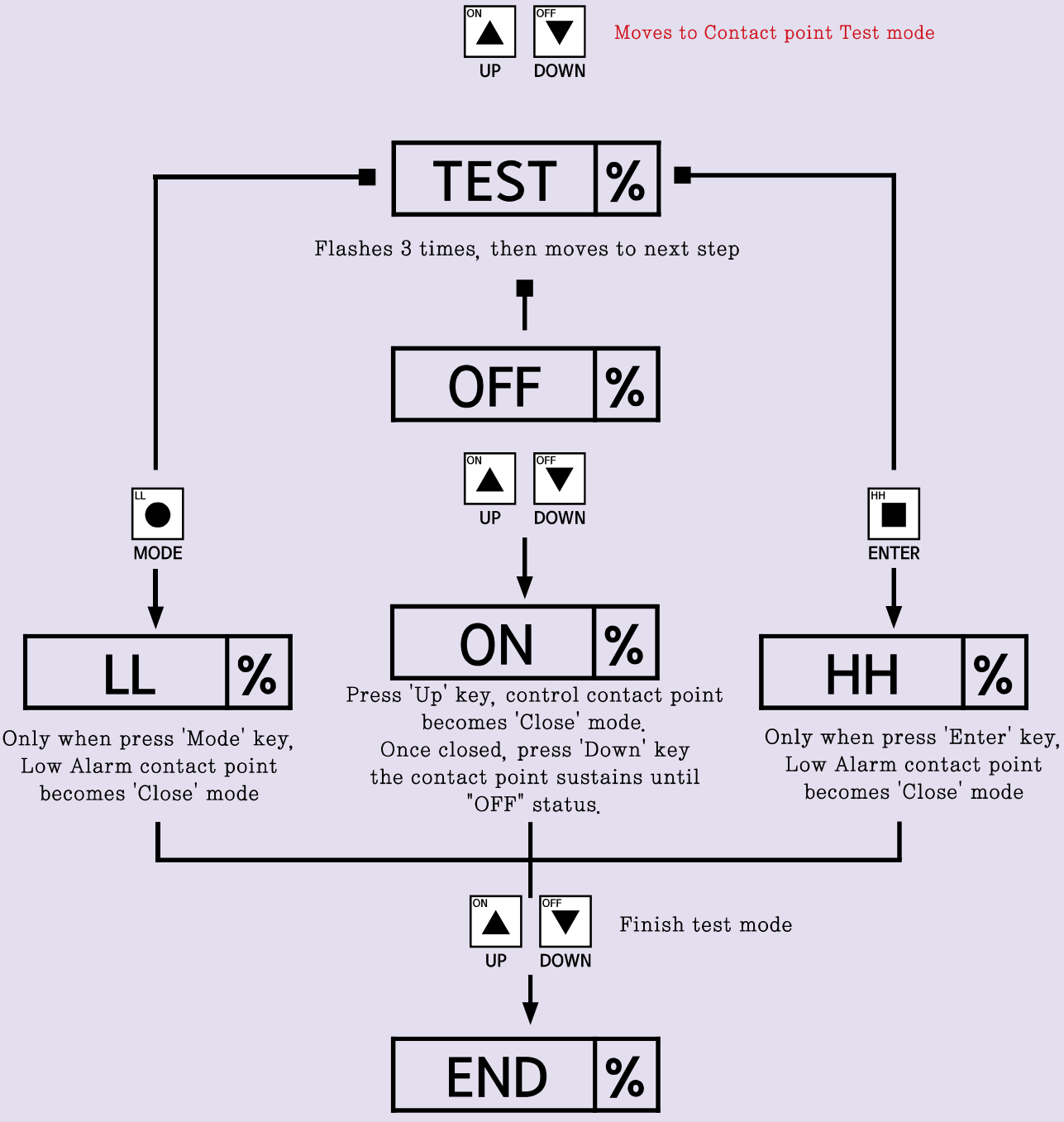

Display Operation

1. If the setting is not correct or in case of malfuction, 'Error' message displays.
   And the message is as below.

ERROR %	In case of Alarm Point setting This is an error message when the setting of point is not set as ths sequence of HH-P 〉H-P 〉L-P 〉LL-P.
SHORT %	Input Error This message displays when the output from the sensor does not input to the controller.
OPEN %	Input Error This message displays when the output from the sensor does not input to the controller.

2. Relay Output Operation

There is an output of high alarm when the value is over 'HH-P' setting.
There is an output of low alarm when the value is under 'LL-P' setting.

The Control contact point becomes "ON" when the value is under "L-P"
(in case of supply mode)
The Control contact point becomes "OFF" when the value is under "H-P"
(in case of supply mode)

The Control contact point becomes "ON" when the value is under 'H-P'
(in case of eject mode)
The Control contact point becomes "OFF" when the value is under "L-P"
(in case of eject mode)

3. Analog Output Operation

This function is to re-transmit the value of current level to other equipment.
When you want to change the output for the setting is not correct, please refer to an extra calibratin manual.
The current output include self power, there is no need of extra power supply.

Check & A/S

If you find any abnormal system during operation, please try to check below points.

1. Is the power connected to AC110V or AC220V correctly?
2. Is the wiring to the sensor made correctly?
3. Is the contact with the relay built up through correct sequence?
4. Is the current input from the sensor correct?
5. Is there any malfuction around the unit?

If the trouble still exists, please kindly contact below.

* Installation and operation manual is subject to change without prior notice for quality improvement.

Head Office
94-2, Yongdap-dong, Seongdong-gu, Seoul, Korea

R&D Office
2-71, Jeonong-dong, Dongdaemun-gu, Seoul, Korea

Tel : 02-2213-9888(代) Fax : 02-2245-3482
e.mail : master@dh34.com Domain : www.dh34.com