Control Box

WOB SERIES

Type of Weather-Proof
IP65

WOB-1GANG



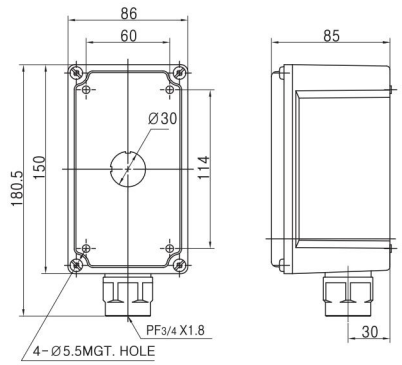

WOB-2GANG



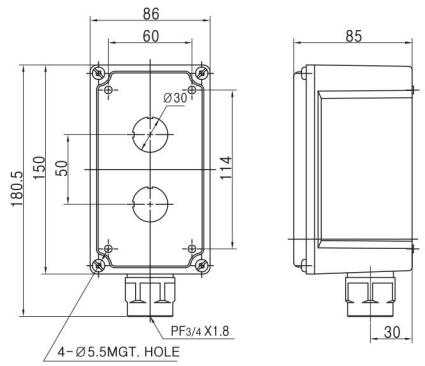

WOB-3GANG



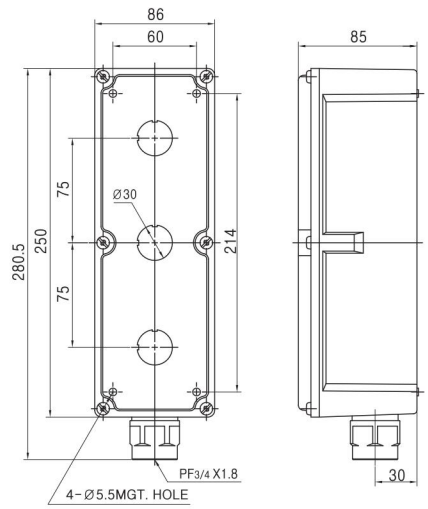

WOB-4GANG



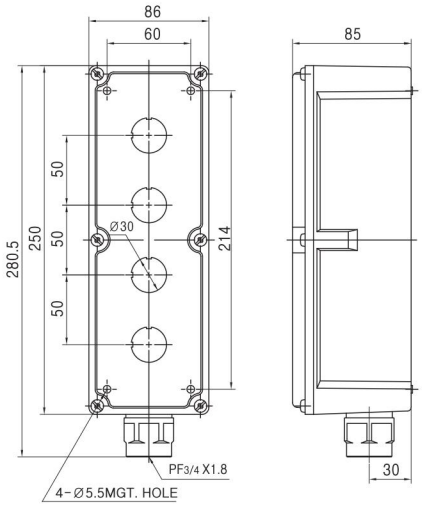

Features

- The box is designed with IP66 waterproof type
- The box made of aluminium die-casting is light and strong
- Attachment hole of the box is from 1 to 4
- Attachment hole of the box is Ø 30

Standard Finish

- MUNSELL No. 7.5BG 6/1.5
- If you want another color, contact us please.

Standard Materials

- **Body :** Die casting aluminium alloy
- **Cover :** Die casting aluminium alloy
- **Plug casing :** Die casting aluminium alloy
- **Bolt & Washer** : Stainless steel

Compliance

- KS C IEC 60529, KS C IEC 60598-1
- IP 55