SNS LOADER LOG GRAPPLE



LGTR(Tropical Type)



LGGP(General Purpose)



LGST (Sorting Type)

- Maximum material retention and strength in loading / unloading and handling of log, lumber and palletized material.
- Heat-treated pin and bushings. (STD)
- Custom carriage widths available.
- Optional independent tine design available for uneven terrain conditions.
- Some attachments require pre-installed 3rd function piping on the machine.
- Double Top and paddle top clamp forks available as pin-on or with SNS quick coupler system.

LGTR (TROPICAL TYPE)

MODEL	WHEEL LOADER	HEIGHT(mm)	LENGTH(mm)	WIDTH(mm)	A	Ø B	Weight(kg)
LGTR-301	10 - 13 tons	1560	1330	1845	1600	850	1070
LGTR-501	13 – 17 tons	1700	1385	2300	1720	1000	1700
LGTR-601	17 – 19 tons	1865	1415	2500	1900	1000	1900
LGTR-701	19 – 25 tons	2400	1570	2700	2450	1100	2315
LGTR-801	25 – 35 tons	2530	1730	2990	2550	1200	2570

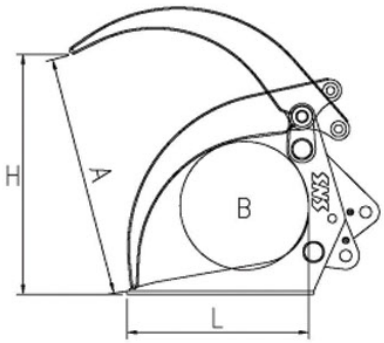

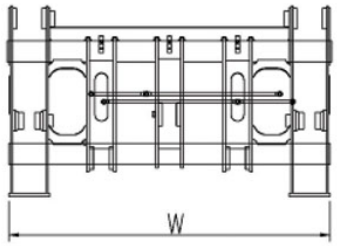

LGGP (GENERAL PURPOSE)

MODEL	WHEEL LOADER	HEIGHT(mm)	LENGTH(mm)	WIDTH(mm)	A	Ø B	Weight(kg)
LGGP-301	10 - 13 tons	1800	1000	1810	2300	300	1250
LGGP-501	13 – 17 tons	2200	1320	1850	2410	315	1500
LGGP-601	17 – 19 tons	2360	1350	1930	2700	320	1960
LGGP-701	19 – 25 tons	2400	1430	1950	2800	400	2215
LGGP-801	25 – 35 tons	2660	1455	2010	3075	485	2255

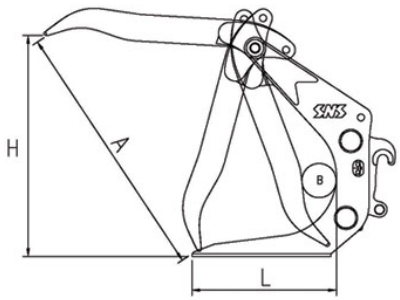

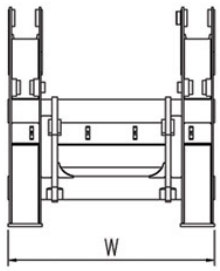

LGST (SORTING TYPE)

MODEL	WHEEL LOADER	HEIGHT(mm)	LENGTH(mm)	WIDTH(mm)	A	Ø B	Weight(kg)
LGST-301	10 - 13 tons	2000	1020	1550	2300	1200	1250
LGST-501	13 – 17 tons	2215	1190	1740	2670	1300	1600
LGST-601	17 – 19 tons	2600	1160	1930	3050	1300	1700
LGST-701	19 – 25 tons	2850	1300	1930	3380	1400	2385
LGST-801	25 – 35 tons	2850	1300	2010	3385	1500	2530

