DAEHAN SENSOR

Horizontal Type Level Switch

DH – Series

Level Switch with Contact – Output

Product Name

DH – 200S



INNOBIZ

ISO 9001 인증업체

1993 DAEHAN SENSOR CO., LTD.
All rights reserved

Table of Contents

1. Summary 3

2. Safety Guide 4

3. Introduction 8

4. Installation 9

5. Warnings 9

6. Wiring 10

7. Precautions 10

8 . Diagnosis and trouble shooting 11

9. Warranty and Warranty Coverage 11

1. Summary

So to use this product safely and correctly, fully understand the manual and keep it for reference.

- ⦿ Installation and operation manual must be provided to the end user.
- ⦿ Installation and operation manual is subject to change without prior notice for quality improvement.
- ⦿ This manual should not be altered without manufacturer's approval for any purpose.
- ⦿ You must follow the instructions in the manual for safety, the manufacturer is not responsible for problems caused by user carelessness.
- ⦿ The manufacturer does not have any resposnsibility to the accident arised by user's intentional or negligent fault. (any alteration, exploded)
  If A/S or modification of the product is required, please feel free to contact us.
- ⦿ Unless it is specifically stated, warranty period is one year in principle after the product is shipped.
- ⦿ Even during the warranty period, in case of any problems caused by the following reasons, please note that it will be charged.
  - Users improperly maintain and / or repair products
  - Improper transportation, storage or handling of the product beyond the its conditions
  - The breakdown caused by using the product beyond the specification range
  - Problems caused by natural disasters such as fire, earthquake, storm, flood, thunder, lightning, and etc
- ⦿ During installation and operation, be sure to use the products in compliance with safety regulations of the site.
- ⦿ When you open the cover of the product, be sure to shut off the power and should work after one minute waiting.
- ⦿ You must use sealing fitting or cable gland when you do electrical wiring.

2. Safety Guide

Installation of the product, maintenance and repair shall be entitled to be carried out in compliance with safety regulations, regulatory requirements by qualified personnel in professional occupations. Improper installation, use and maintenance may cause fire and explsion damage, in order to prevent the risk of possible danger, users should read the warnings and precautions on safety that are stated in this manual.

After reading, keep it where you can see always.

– Danger to safety, warnings and precautions

The definition on the danger, warning, caution indicated in this instructioin manual

⦿ Danger

– It may cause death or serious injury due to improper handling and refers to the risk of predictable physical damage.

⦿ Warning

– It may cause death or serious injury due to improper use or installation and refers to the risk of predictable physical damage.

⦿ Caution

– It may cause physical damage due to improper use or installation.

Installation and Handling Precautions

– Danger –

⦿ Make sure to read all the user's manual before installing or using explosion-proof level switches.

⦿ In case of failure to follow the user's manual, it can result in severe injury or even death to humans and it may result in damage and property damage due to fire or explosion by abnormal functioning.

⦿ Do not act affecting the explosion-proof performance with the decomposition or modification of the product for the user's any purpose.
If you change and use it, it can not maintain the explosion-proof performance, it may result in personal injuries and property damage due to fire or explosion by abnormal functioning.

⦿ Do not disassemble the product when electric power is supplied. In the state of disassembling, it can not maintain the explosion-proof performance, it may result in personal injuries and property damage due to fire or explosion by abnormal functioning.

⦿ Make sure power off and wait one minute and proceed installation and internal wiring connection of explosion-proof level switches. In the state that electric power is supplied, if you do installation and / or internal wiring connection, it may result in personal injuries and property damage due to fire or explosion by abnormal functioning.

⦿ You must use explosion-proof cable glands, and explosion-proof cable flexible. Non-explosion-proof products may result in personal injuries and property damage caused by explosion or fire.

Installation and Handling Precautions

– Warning –

⦿ Make sure to read all the user's manual before installing or using explosion-proof level switches.

⦿ Do not change the seal of the explosion-proof level switches randomly. It may result in damage and property damage due to fire or explosion caused by abnormal functioning.

⦿ This product is divided into an upper part (Head) and lower part (FLOAT) by the FLANGE. The upper part should not be submerged. If the upper part (HEAD) is submerged into the liquid such as water, oil, palm oil, it may result in damage and property damage due to fire or explosion caused by leaked liquid.

⦿ Be sure to check the contents of the nameplate when opening product.
Use the product in the same level risk area where it meets the rating of explosion-proof certificate or lower level area.

⦿ When to connect a power source of the explosion-proof level switches, do not work with wet hands, and check that the power is off.
Otherwise, it may result in personal injuries due to electric shock.

⦿ Do not remove the signage such as nameplate and precautions which attached on the body, so that always do to be seen.

Installation and Handling Precautions

– Caution –

⦿ Do not apply excessive pressure on the product. Please do not use excessive force when installing the product.

⦿ Do not shock the product during transport.
Internal switch damage caused by the shcok may affect to abnormal operation.

⦿ Check the details on the product nameplate and do not use the product other than specified standards.
If you use the product beyond range, it can cause a short circuit, fire, and explosion.

⦿ This product is divided into an upper part (Head) and lower part (FLOAT) by the FLANGE. The broken lower part (FLOAT) by an impact can not operate normally.
Do not impact on the lower part (FLOAT).

3. Introduction

Media : Only Liquid

Output : N/O, N/C

Contact Rat. : 250VAC / 3A

Cable Entry : Cable Gland / Flexible

Material : ① Head – Aluminum (AC2B.1)

② Socket – STS 304

③ Shaft – STS 304

④ Stem – STS 304

⑤ Float – STS 304

Wiring : 2 Wire (SPST)

Temperature : −20℃ ~ +80℃

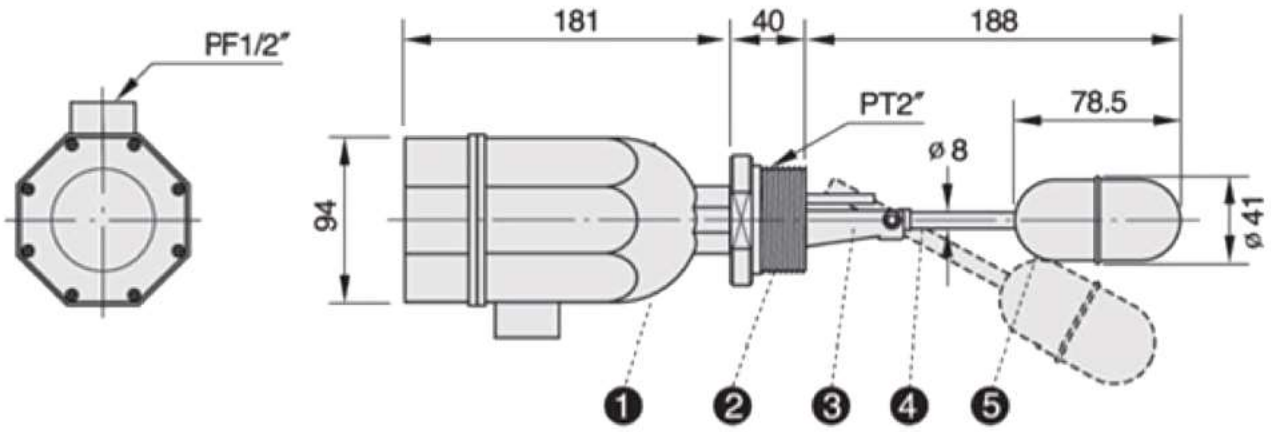

The level switch uses the force of repulsion between magnets of the same polarity.

The float moves in the vertical motion according to the liquid level change.

The float's magnet operates switch magnet rebound which installed inside head, and it operates DRY REED SWITCH working to output contact points so that enables control liquid level.

4. Installation

As shown in the pricture, install to the tank and use it.

Check if the attached flange is suitable for the standard product.

Insert float and body insdie the tank.

Connect COM and the contact terminals inside sensor head and controller.

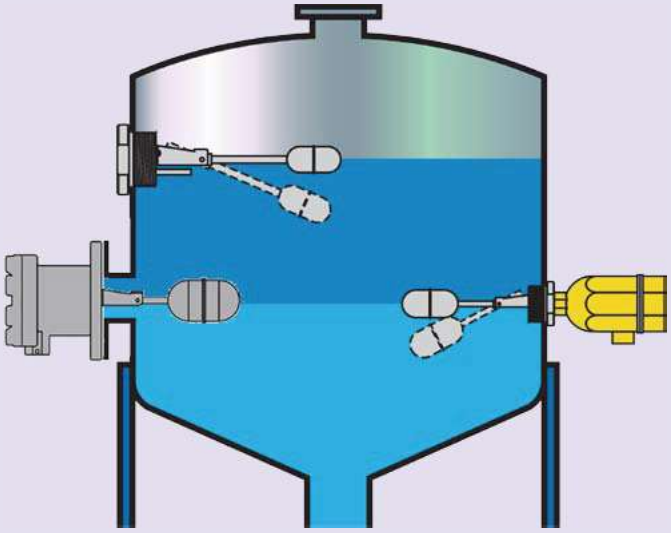

As shown above, if nstallation direction of the sensor is horizontal, the wiring penetrations must be facing down (Bottom). In addition, if the length of the flange pipes is long, during installation, the vertical movement of the float may not work properly so that check the specification of the tank and product.

5. Warnings

During installation, the equipment should not be connected with electrical power.

Check the product specifications and type so that be careful not to exceed the electrical rating.

Installation and maintenance should be done by the authorized officer.

You must make sure that there is no explosive gas or material before installation.

To avoid unexpected accidents (death, serious bodily injury and property damage), you must cut the power off before installation, inspection or maintenance.

6. Wiring



No special wiring method of DH-100F products.

To order A contact, B contact can be selected.

7. Precautions

⦿ Check the rating of the product switch, be careful not to exceed the electrical rating.

⦿ You must make sure that there is no explosive gas or material before installation. (You must cut the power off before installation, inspection or maintenance.)

⦿ Make sure the wiring is connected correctly.
(When you check a short circuit or poor contact, you must cut the power off first, and proceed the work.)

⦿ We should not pull the wires with excessive force during electrical wiring.

⦿ During electrical wiring, be cautious to avoid damage on the wires coating or wires cover.

8. Diagnosis and trouble shootin

– General diagnostic methods

◎ Check if liquid exist inside the sensor.

◎ Check if the float moves smoothly and according to level change.

◎ Check if the stopper is secured firmly in place.

◎ Check if thw wiring is correct.

Repair, disassembly must be conducted by professional egineers.
The product should not be disassembled without manufacturer's authorization.

– External device diagnostics

◎ Check if power is properly supplied. (DC 24V / DC 5V & DC 15V)

◎ Check if output is normal.

9. Warranty and Warranty Coverage

– General diagnostic methods

◎ The warranty period for this product is one year from a shipping date.
If it is not clear when to be shipped out, manufacturing date in the nameplate will be the base date.

– Exceptions against warranty coverage

◎ Problem occured due to the negligence of the users

◎ Any modifications or repair by the users without authority

◎ In case of force majeure clasue

◎ Any violation against the content in the nameplate or user's manual