TC-5972DP Pneumatic Shield Box



Features

- High RF Shielding
- Pneumatic control of lid open-close and optional test fixture motions
- EMI filters on all Data and DC lines
- Easily customizable to meet various test needs
- Red and Green LED's for Pass/Fail indication
- RS-232C Remote Control
- High performance absorber for radiation testing

TESCOM

Specifications

Mechanical Specifications

RF Connectors without I/O interface panel	
	four(4) N(f) outside and SMA(f) inside
Line voltage	
	DC 24 V, Max. 2 A.
Remote control	
	RS-232C, 3 wire, DB9(s)
Air connection	
Main connector	6 mm OD hose, one-touch push-on fitting
Fixture control connector	4 mm OD hose, one-touch push-on fitting
Input air pressure	5 to 10 bar
Dimension	
Inside	445(W) x 449(D) x 338(H) mm, 208(D) mm top side
Outside	582(W) x 661(D) x 451(H) mm
Weight	
TC-5972DP	approx. 32 kg
***Packing**	
Size	830(W) x 700(D) x 555(H) mm
Weight	approx. 42 kg
*The size or weight of a package may vary on how to pack a package.	

Copyright © Tescom Co., Ltd. All right reserved.
#927 Unitechvil 142, Ilsan-ro, Ilsandong-gu, Goyang-si, Gyeonggi-do, Korea [10442]
TEL: 82-31-920-6600 FAX: 82-31-920-6607 support@tescom.org http://www.tescom.co.kr

Dimensions

- TC-5972DP Inner Dimension

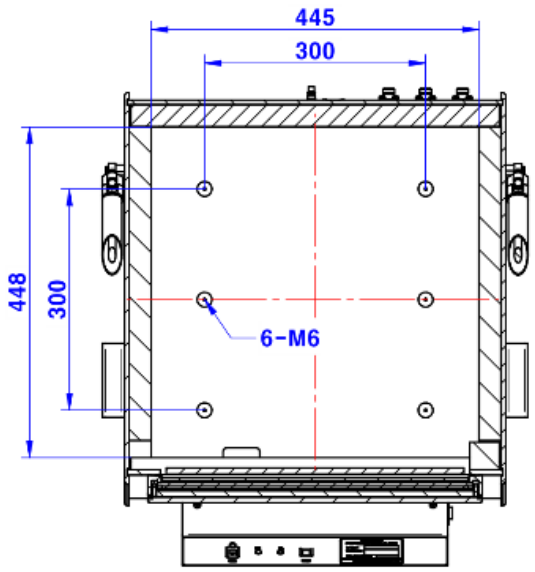

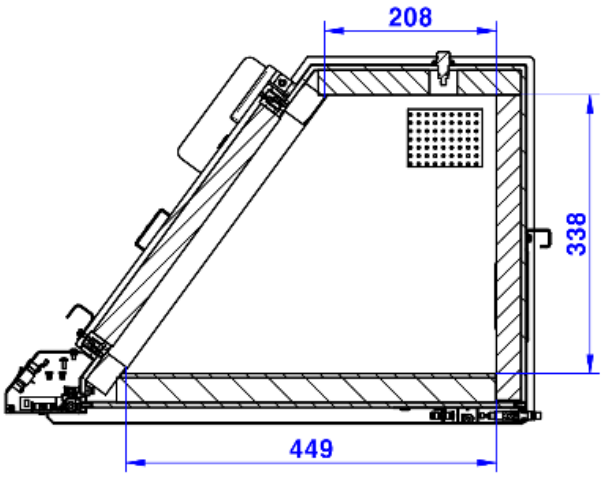

- TC-5972DP Outer Dimension

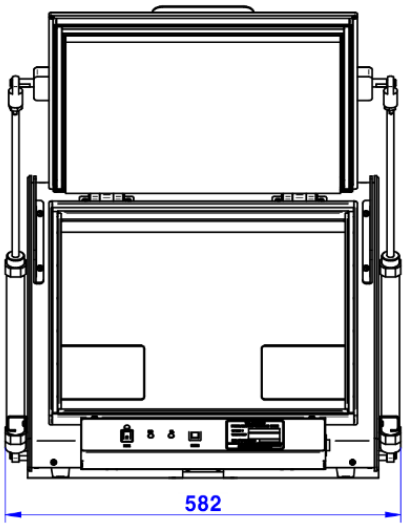

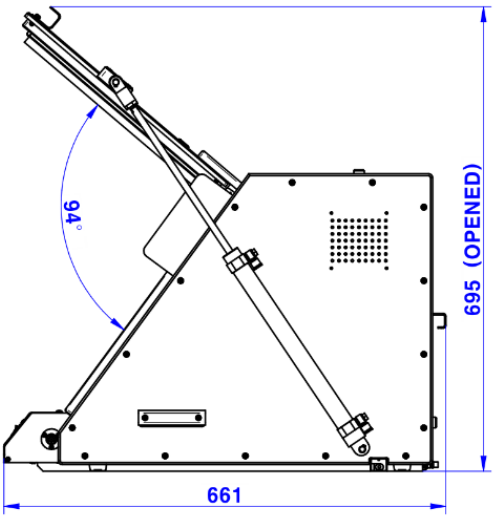

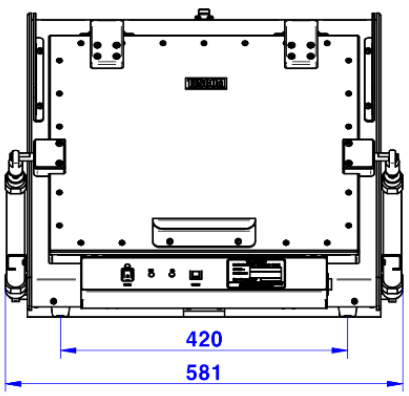

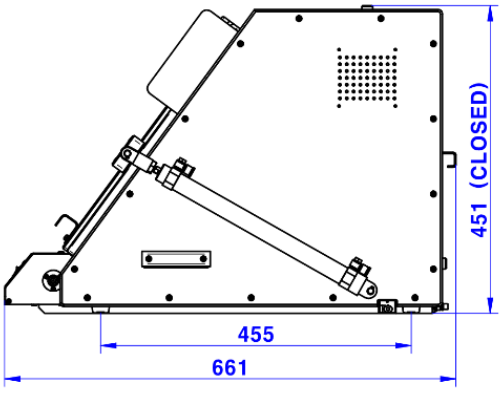

Copyright © Tescom Co., Ltd. All right reserved.
#927 Unitechvil 142, Ilsan-ro, Ilsandong-gu, Goyang-si, Gyeonggi-do, Korea [10442]
TEL: 82-31-920-6600 FAX: 82-31-920-6607 support@tescom.org http://www.tescom.co.kr

Typical RF Shielding

- The shielding effectiveness below is measured when the blank panel is mounted; other I/O interface panel results a different shielding effectiveness of the shield box.

Frequency	Shielding effectiveness (dB)
100 to 2000 MHz	⟩ 70 dB
2000 to 3000 MHz	⟩ 70 dB
3000 to 6000 MHz	⟩ 60 dB

Absorber Reflectivity

- Measured the reflected signal from the absorber with metal plate using the VNA.

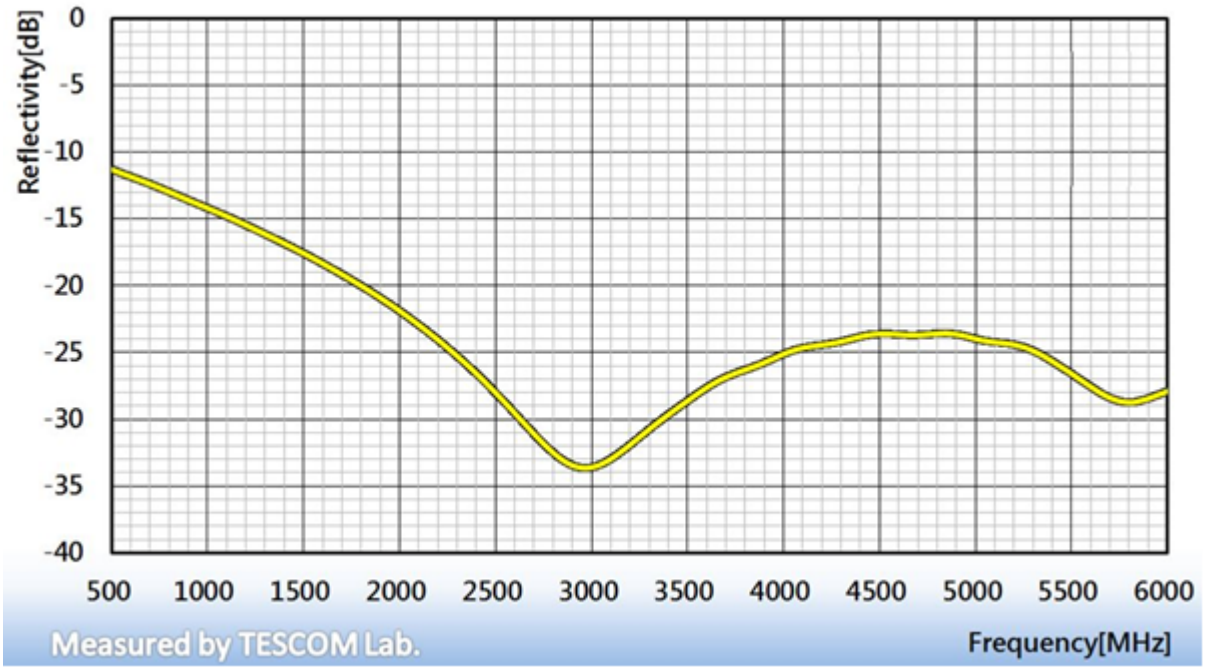

Copyright © Tescom Co., Ltd. All right reserved.
#927 Unitechvil 142, Ilsan-ro, Ilsandong-gu, Goyang-si, Gyeonggi-do, Korea [10442]
TEL: 82-31-920-6600 FAX: 82-31-920-6607 support@tescom.org http://www.tescom.co.kr

Ordering Information

Order Number	Description
TC-5972DP	**Pneumatic Shield Box (including accessories bellow)**
	Test Report RF Cable, RG-400S, N(m) to N(m) 1 m, 1 pc DATA Cable, DB9(p) to DB9(s) 2 m, 1 pc Air Coupler, 1 pc Switching Power Supply, 1 pc

Pre-Configured I/O Interface Panel

I/O Interface Panel	Order Number	Configuration
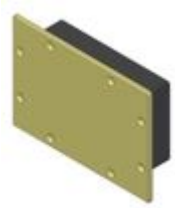 Blank Panel	M5970D01A	• Blank module (Absorber)
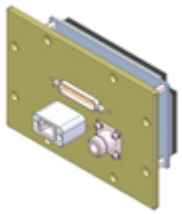 Data Interface Panel	M5970C03A	• one(1) N(f) outside and SMA(f) inside • one(1) RJ-45 outside and inside • one(1) DB25(p) outside and DB25(s) inside, 1000 pF Pi filter
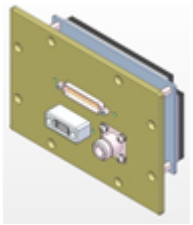 Data Interface Panel	M5970C04A	• one(1) N(f) outside and SMA(f) inside • one(1) USB 2.0 outside and inside • one(1) DB25(p) outside and DB25(s) inside, 1000 pF Pi filter
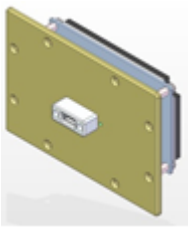 Data Interface Panel	M5970C08A	• one(1) USB 2.0 outside and inside

Copyright © Tescom Co., Ltd. All right reserved.
#927 Unitechvil 142, Ilsan-ro, Ilsandong-gu, Goyang-si, Gyeonggi-do, Korea [10442]
TEL: 82-31-920-6600 FAX: 82-31-920-6607 support@tescom.org http://www.tescom.co.kr

Custom I/O Interface Panel

- Customized I/O Interface panels are available. Please contact Tescom sales team or your local distri butor.

I/O Interface	Order Number	Typical Data Rate / Line Voltage	*Typical Shielding
 DB37, 1000pF pi Filter	3409-0012-1	3 Mbps / 100 VDC, 5 Amps max	>70 dB from 0.5 to 2 GHz >80 dB from 2 to 3 GHz >70 dB from 3 to 6 GHz
 DB25, 1000pF pi Filter	3409-0009-1	3 Mbps / 100 VDC, 5 Amps max	>70 dB from 0.5 to 2 GHz >80 dB from 2 to 3 GHz >70 dB from 3 to 6 GHz
 DB25, 100pF pi Filter	3409-0014-1	10 Mbps / 100 VDC, 5 Amps max	>50 dB from 0.5 to 2 GHz >60 dB from 2 to 3 GHz >60 dB from 3 to 6 GHz
 DB9, 1000pF pi Filter	3409-0008-1	3 Mbps / 100 VDC, 5 Amps max	>70 dB from 0.5 to 2 GHz >80 dB from 2 to 3 GHz >70 dB from 3 to 6 GHz
 DB9, 100pF pi Filter	3409-0010-1	10 Mbps / 100 VDC, 5 Amps max	>50 dB from 0.5 to 2 GHz >60 dB from 2 to 3 GHz >60 dB from 3 to 6 GHz
 USB 2.0 Filter	3409-0018A-3	480 Mbps / 5 V, 500 mA / Max Current: 5A	>60 dB from 0.5 to 2 GHz >70 dB from 2 to 3 GHz >70 dB from 3 to 6 GHz
 USB 3.0 Filter(Active)	3409-0042A-1	5000 Mbps / 5 V, 900 mA / Max Current: 1.5 A	>70 dB from 0.5 to 2 GHz >70 dB from 2 to 3 GHz >55 dB from 3 to 6 GHz
 RJ-45 Filter	3409-0022A	1 Gbit/s Copper-Line Ethernet (1000 BASE-T)	>60 dB from 0.5 to 2 GHz >70 dB from 2 to 3 GHz >70 dB from 3 to 6 GHz
 DC Power Adaptor,	3406-0004A	50 VDC, 3 Amps max	>70 dB from 0.5 to 2 GHz >80 dB from 2 to 3 GHz >80 dB from 3 to 6 GHz

Copyright © Tescom Co., Ltd. All right reserved.
#927 Unitechvil 142, Ilsan-ro, Ilsandong-gu, Goyang-si, Gyeonggi-do, Korea [10442]
TEL: 82-31-920-6600 FAX: 82-31-920-6607 support@tescom.org http://www.tescom.co.kr

I/O Interface	Order Number	Typical Data Rate / Line Voltage	*Typical Shielding
 DC Power Adaptor, Banana Jack Type	3406-0005A 3406-0006A	50 VDC, 10 Amps max	>70 dB from 0.5 to 2 GHz >80 dB from 2 to 3 GHz >80 dB from 3 to 6 GHz
 AC Power Adaptor	3103-0009A	250 VAC, 7 Amps max	>70 dB from 0.5 to 2 GHz >80 dB from 2 to 3 GHz >80 dB from 3 to 6 GHz
 RF, N-SMA Connector	3408-0038		>60 dB from 0.5 to 2 GHz >70 dB from 2 to 3 GHz >70 dB from 3 to 6 GHz
 RF, SMA-SMA Connector	3408-0039		>60 dB from 0.5 to 2 GHz >70 dB from 2 to 3 GHz >70 dB from 3 to 6 GHz

- Each shielding effectiveness is measured when each I/O interface panel, which is shown above, is mounted.
- Above data was measured by Tescom, The Shielding Effectiveness might be different based on the measuring method and condition.
- This data has been measured under the condition that the cables are not connected to each filters. When the cables are connected it can affect the shielding performance.

SPECIFICATIONS SUBJECT TO CHANGE WITHOUT PRIOR NOTICE

Copyright © Tescom Co., Ltd. All right reserved.
#927 Unitechvil 142, Ilsan-ro, Ilsandong-gu, Goyang-si, Gyeonggi-do, Korea [10442]
TEL: 82-31-920-6600 FAX: 82-31-920-6607 support@tescom.org http://www.tescom.co.kr