ENGINE STOP SOLENOID

MODEL DSC ENGINE STOP SOLENOID

Dong-Suh Control Co.,Ltd.





DESCRIPTION

The DSC Engine Stop Solenoids are designed to meet continuous duty operation in the most several engine environments. DSC engine stop solenoids are available in 24V and mounts directly to the engine without extra bracket.

APPLICATION

The DSC Engine Stop Solenoids are being supplied by OEM requirement. The connectors and wires can be designed and customized to meet customer requirement. It can be applied to most demanding heavy duty engines used on off-highway of Industrial Vehicle, Construction Machine, Agricultural Equipment, Commercial vehicle etc.

FEATURES

- Continuous duty operation under various temperature and vibration
- Simple installation
- Durable design for long life and safe

DIMENSIONS(mm)

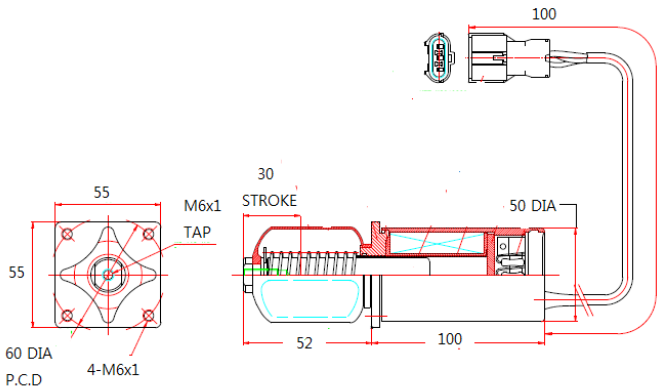

SPECIFICATIONS(TYPICAL)

- Rated voltage : DC24V
- Operating temperature : -20℃~ +80℃
- Storage temperature : -40℃~ +80℃
- Pulling/Holding forces : 4/10kgf, 8/12kgf(at 25℃)
- Pull current : 22A max.(at 24Vdc)
- Hold current : 1.2A max(at 24Vdc)
- Stroke : 30mm

www.dscontrol.co.kr

Note: As all contents in this catalogue is the typical information, it is subject to change without notice for product improvement and it could be different depending on the products.