DUT KOREA
Solution for Polyurethane

LIGHT WEIGHT PUMP FOR HIGH PRESSURE FOAMING MACHINE

DMP METERING PUMP



DUT
Solution for Polyurethane

Since 1992 copyright (c) 2015 DUT KOREA.,Ltd all right reserved





DUT KOREA is specialist of PU machine and offers high pressure mixing head, metering pump, foaming machine and all kinds of PU solutions.

DUT KOREA

DUT was established in 1992 and became a leading company as manufacturer & specialist in the field of High Pressure PU Solutions including Foaming Machine, Mixing Head, Metering Pump and all kinds of PU Applications in Korea.
DUT started as a PU business with a high quality Mixing Head, which is the core of PU technology, then the business expanded to various kinds of PU applications.
DUT's market share of this field is increasing rapidly and customer satisfaction for DUT's quality and service has been making strong band power.

Solution for Polyurethane

DUT's slogan is "Solution for Polyurethane". It means DUT does not just sell the product but care of products until customer's satisfaction. Our technology of polyurethane is started from customer's need and finished by their satisfaction.

Huge Sales Network

The sales department has a large international network with over 57 countries including USA, Germany, Italy, UK, Poland, Hungary, Egypt, China, Mexico, Japan, India, Iran, Thailand, New Zealand, and Brazil so customers are able to contact easily in their region.

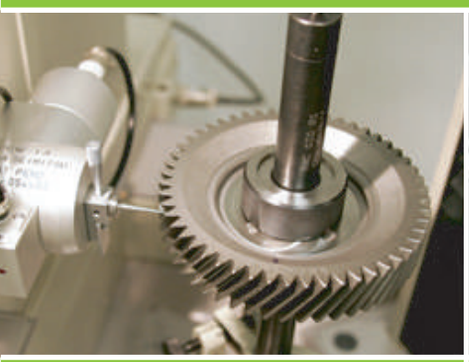





DUT KOREA introduces premium DMP METERING PUMP.

Our products are focused on operator's convenience and its innovative technologies make operator's work simply.

Compatibility

'DMP' gives perfect compatibility with your previous models.
(Perfect compatibility with A2VK type Pump)

Weight lightening

Using 'Duralumin' case and Simplification of parts inside make ultimate lightweight.

Maintenance

Parts simplification prevents to occure funamental malfunction of machine and it helps operator to maintain and repair simply.

INDEX

INTRODUCTION OF 'DMP'

FEATURES

SPECIFICATION

DIRECTION OF FLOW

MA MANUAL CONTROL

OPERATING PRESSURE RANGE (INLET)

OPERATING PRESSURE RANGE (OUTLET)

ORDER CODE

DIMENSION OF METERING PUMP (5, 12, 28, 55, 107cc)

INSTRUCTION - PART LIST FOR DMP PUMP - SERIES

GLOBAL NETWORK

INTRODUCTION OF 'DMP'

DUT has newly developed metering pump 'DMP' and it is the type of 'Axial Piston Variable Displacement'. The pump designed to improve from weaknesses of previous A2VK type's metering pump.
Screws for 'Mechanical Adjusting Gear' have replaced by 'Fine Pitch', so operators are able to make precise adjustment of output.
Although parts inside are all changed or improved, it still has perfect compatibility with your previous models(A2VK type) and weight lightening technology has applied via parts simplification inside and using duralumin case.
Simplification of design help operator's easy maintenance and repair and it makes their work efficiency higher.



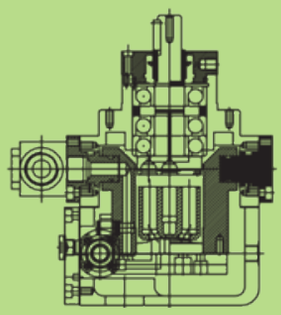

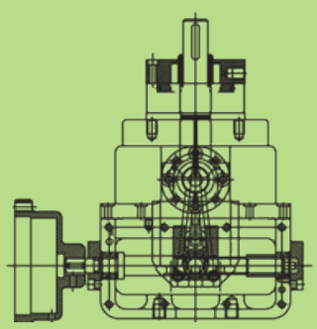

FEATURES

- High level of metering accuracy
- Operating pressure up to 250bar
- Very little pulsation of flow
- Quiet operation
- Optimum volumetric available
- Low suction pressure, even when pumping highly viscosity materials
- Perfect compatibility with previous model (A2VK type)
- Manual control via hand wheel with built-in- precision measuring scale or alternative mechanical rod control, for mounting pneumatic or hydraulic control cylinders

SPECIFICATION

Model			DMP 5	DMP 12	DMP 28	DMP 55	DMP 107
Displacement Vg max		cm^3	5.8	11.6	28.1	54.8	107
Flow Qmax In Open circuit and at speed (At a viscosity of $v=36mm^2/s$)	n = 735rpm	l/min	4.4	8.3	20	39	76
	n = 970rpm	l/min	5.8	10.9	26	51	100
	n = 1,450rpm	l/min	8.7	16.3	39	77	150
Power at ^p = 220bar and speed	n = 735rpm	kW	1.4	3	7.2	14	27.3
	n = 970rpm	kW	1.8	3.9	9.3	18.3	35.9
	n = 1,450rpm	kW	2.8	5.9	14	27.6	53.9

DIRECTION OF FLOW

Swivel Direction	Clockwise Open circuit	Rotation	Anti-Clockwise Open circuit	Rotation Closed circuit
Anti-Clockwise	S to A	B to A B plugged	S to A	A to B A plugged

MA Manual Control

By turning hand wheel, the pump swivel body and thus the displacement or output flow is infinitely varied within the range Q0 to Qmax via a self-locking added spindle.

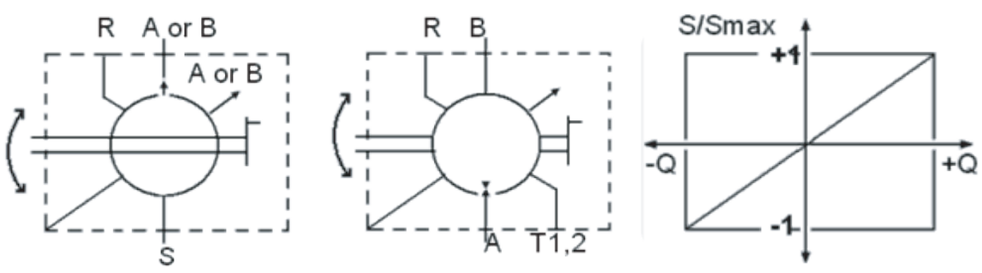

Specification		DMP5	DMP12	DMP28	DMP55	DMP107
Rotations of hand wheel V go to Vg max	Us		10.6	12.7	16	13.4
Max operating force on hand wheel	Kp	7	7	7	8	12
Pumps weight (Approx)	Kg	5	11	19	35	64

OPERATING PRESSURE RANGE – Inlet Side

OPEN CIRCUIT : Pre pressure 1~3bar absolute at section port S
CLOSED CIRCUIT : Sum of combined pressure at A and B ≤ 250 bar
(315 bar for short period), fit leakage at port T

OPERATING PRESSURE RANGE – Outlet Side

Pressure at port A or B
Nominal pressure ---------- Pn = 250 bar
Peak pressure ---------- Pmax = 315 bar
(Pressure data to DIN 24312)

ORDERING CODE (It has perfect compatibility with the pump 'A2VK' from Rexroth.)

Ordering Code Short Code

DMP	12	O	R	1	1

Pump Type

Variable pump	DMP

Size

05.0 cm^3	05
11,6 cm^3	12
28,1cm^3	28
54,8 cm^3	55
107,0 cm^3	107

(Displacement)

Type of Circuit

open circuit	O
closed circuit	C

Direction of Rotation (View on drive shaft)

Clockwise	R
Anti-clockwise	L

Assembly Design(Viewed on drive shaft)

MA-handwheel on left	1
MA-handwheel on right	2

Valve Assembly

without valve assembly	0
built-on-pressure relief valve	1

< Ordering Example >

■ DMP.12.O.R.1.1

- **Variable pump DMP**
- **Size 12**
- **Open circuits**
- **Clockwise rotation**
- **Built-on**
- **Assembly design 1**

DIMENSIONS OF METERING PUMP (5cc, 12cc, 28cc, 55cc, 107cc)

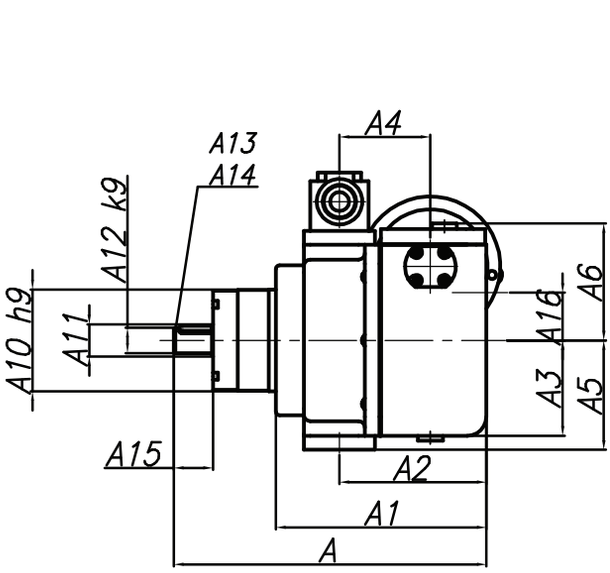

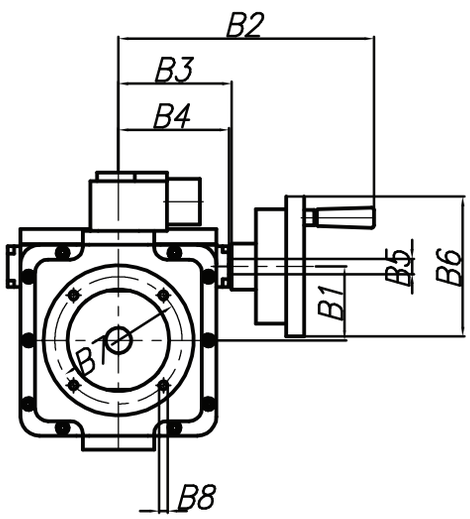

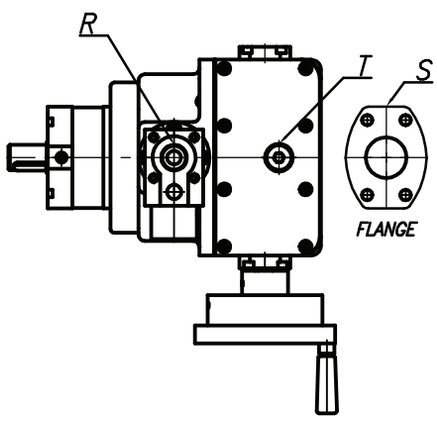

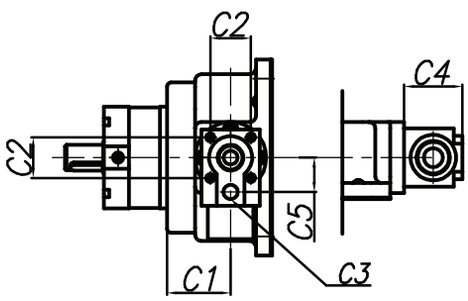

DMP	A	A1	A2	A3	A4	A5	A6	A7	A8	A9	A10	A11	A12	A13	A14	A15	A16
5cc	200	128	88	61	55	72	78	–	–	–	66	28	20	M6	20	31	31
12cc	245	166	116	75	72	86	92	–	–	–	80	28	20	M6	21	31	38
28cc	307	207	145	90	84	103	107	–	–	–	100	34	25	M10	27	46	45
55cc	362	239	181	107	104	122	125	–	–	–	125	40	30	M12	35	50	57
107cc	449	289	218	125	143	140	145	–	–	–	160	50	40	M12	28	68	70

DMP	B1	B2	B3	B4	B5	B6	B7	B8	C1	C2	C3	C4	C5	R	T	S
5cc	44	188	76	73	9	100	86	M8	40	26	PF 1/4"	46	27	M16xP1.5	PF 1/4"	¾"
12cc	58	202	90	87	12	110	100	M8	50	32	PF 1/4"	46	27	M22xP1.5	PF 1/4"	1¼"
28cc	71	222	110	107	12	110	125	M10	62	40	PF 3/8"	50	35	M27xP1.5	PF 1/4"	1½"
55cc	83	244	132	129	14	150	160	M16	58	48	PF 1/2"	66	45	M33xP2	PF 1/4"	2"
107cc	101	267	155	154	20	150	208	M16	71	48	PF 1/2"	66	45	M33xP2	PF 1/4"	2½"

INSTRUCTION - PART LIST FOR DMP PUMP - SERIES

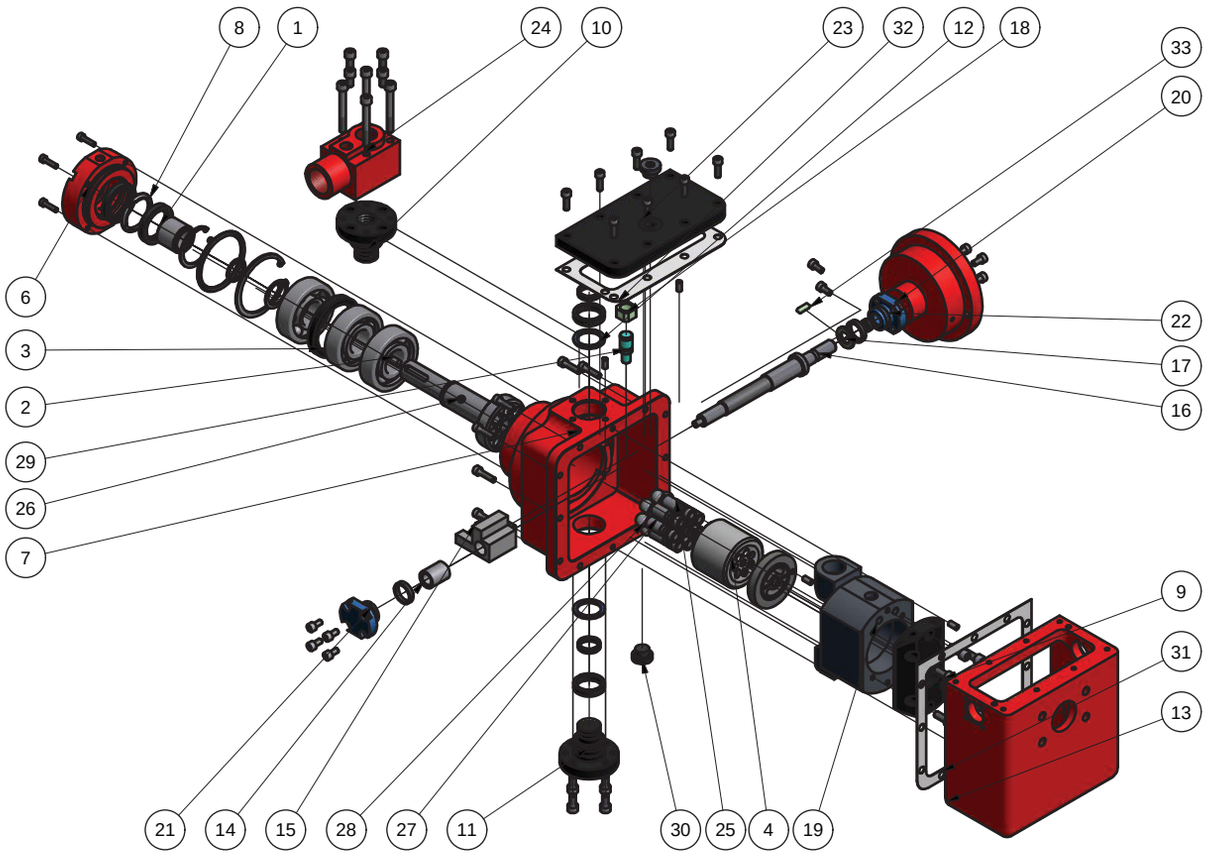

01	02	03	04	05	06	07	08	09	10	11
RUNNING BUSH	KEY	SPACER	PISTON HOUSING	-	FRONT COVER	HOUSING	COLLAR	END PLATE	TOP COVER	BOTTOM COVER

12	13	14	15	16	17	18	19	20	21	22
SLEEVE	END CASING	HANDLE STOPPER	ADJUSTER	SCREW ADJUSTER	COLLAR	KEY	SWASH BLOCK	HANDLE	SEAL COVER(1)	SEAL COVER(2)

23	24	25	26	27	28	29	30	31	32	33
COVER	RELIEF BLOCK		DRIVING SHAFT	CON ROD		PIN	PLUG	GRAND PACKING	GRAND PACKING	KEY

GLOBAL NETWORK

DUT-China
SHANGHAI
E-mail : Kimhongam@hotmail.com

SAMSUNG ELECTRONICS · LG Electronics · Duckyang Ind. Co., Ltd · HP Pelzer Automotive Systems, Inc. · TRW · faurecia · HYUNDAI Drive your way™ · Trèves · LEAR CORPORATION

DUT-Korea Head Office
914-4, Janglim-dong, Saha-gu, Busan, Korea 604-040
E-mail : webmaster@dutkorea.com

SAMSUNG ELECTRONICS · DAEWOO ELECTRONICS · Duckyang Ind. Co., Ltd · HYUNDAI Drive your way™

DUT-Russia
MOSCOW
E-mail : bkhmile@lprglobal.com

DUT-Europe
LUXEMBOURG
E-mail : fisselbrandjy@pofi.lu

SAMSUNG ELECTRONICS · faurecia · RAT · Trèves

DUT-Iran
TEHRAN
E-mail : info@bfgco.com

DUT-middle East
DUBAI
E-mail : business@dutkorea.com

DUT-India
BANGALORE
E-mail : siddhifoams@airtelmail.in
siddhi@bgl.vsnl.net.in

SINTEX · VIDEOCON · Godrej

DUT-South Africa
CAPE TOWN
E-amil : africa@dutkorea.com

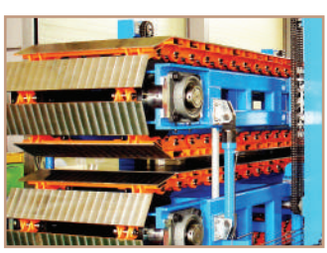
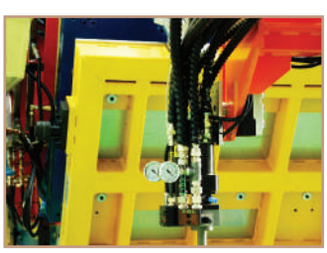



GLOBAL NETWORK











DUT KOREA
Solution for Polyurethane

LIGHT WEIGHT PUMP FOR HIGH PRESSURE FOAMING MACHINE

DMP METERING PUMP

R&D

DUT's R&D Team consists of PU specialists. They are always consider to solve customer's dificulties and DUT's innovative technology is created from customer's requirement. DUT's R&D center is totally set by customers.

Q/A

To offer reliable products, Q/A team has been working to control product's quality. The technical data and troubleshootings are stored in DUT's Q/A database, and it helps to produce DUT's better products.

PRODUCTION

The Production team has organized by skilled engineers and they manufacture DUT's innovative products by reliable equipments.

Korea Head Office

Address : 914-4, Janglim-dong, Saha-gu, Busan, Korea 604-040
E-mail : webmaster@dutkorea.com
Tel : + 82 51 202 0586
Fax : + 82 51 202 0647

China Office

Address : Rm501-A, Hengjie Bldg, No.1234, Xinsongjiang Road, Songjiang Shanghai, China, 201600
E-mail : Kimhongam@hotmail.com
Tel : + 86 216 782 5061
Mobile : + 86 13801883360

India Office

Address : 106/64, byraveshwara Industrial Estate, Andrahail Main Road, Hegganahalli, Peenya IInd Stage, Bangalore-560 091
E-mail : siddhifoams@airtelmail.in, siddhi@bgl.vsnl.net.in
Tel : +91 802 836 4563
Mobile : +91 984 527 1701

Europe Office

Address : 19, rue de Luxembourg L-4391 PONTPIERRE
E-mail : fisselbrandjy@pofi.lu
Mobile : + 33 6 78 66 41 26
Fax : (00 352) 26 55 68 55

Brazil Office

Address : Rua Dona Maria Fidélis, 161, Diadema - SP- Brasi, BRAZIL
E-mail : comex@amino.com.br
Tel : + 55 11 4077 3777

North America Office

USA Office.
Address : 2425 Amesbury Road - Akron, OH 44313, USA
E-mail : Jeff@hunterpure.com
Tel : + 1 330 805 4414
Mobile : +1 330 801 6766
Fax : +1 330 805 4414

Canada Office

Address : Toronto, Ontario, Canada
E-mail : khmile@lprglobal.com
Tel : + 1 905 370 0410
Fax : +1 416 572 3736

Iran Office

Address : No.11,Second floor, Build, NO.382, Moalem Blvd, Yaft Abad, Tehran-Iran
E-mail : info@bfgco.com
Tel : +9821 66211 994
Fax : +9821 6629 6919

Since 1992 company(c) 2015 DUT KOREA Co., Ltd. All rights