C-1500

Gas & Liquid Type Mass Flow meter



Features

- Fast Response flow meter ideal for inert gas and liquid mass flow measurement applications.
- Smart electronics permit field adjustment of critical flow meter settings.
- Field validation of flow meter calibration.
- 200 milisecond response to changes in flow rate
- Outstanding range ability.
- Optional 2×16 backlight LCD display
- Minimal flow blockage and low pressure drop
- RS-232 communication
- Gas & Liquid

Description

Series C-1500S Smart Insertion Mass flow meter provides an alternative for inert gas and clean water flow measurement applications. The meter's sensor offers long-term reliability and 200 milisecond response to changes in flow rate.

The versatile microprocessor-based transmitter intergrates the functions of flow-range adjustment, meter validation and diagnostics in a probe-mounted NEMA 4X(IP65) housing. Mass flow rate and totalized flow, as well as other configuration variables, can be displayed on the meter's optional 2×16 backlight LCD panel.

The meter also provides an optical / galvanic isolated 4-20 mA, 0-10VDC output and two alarm outputs.

The programmable trnsmitter is easily configured via RS-232 and Smart interface Windows®-based software minimum 8MB of RAM, preferred 16MB of RAM. This series C-1500S is suitable for pipes of ducts from 2 inches to 48 inches(DN 50 to DN 1200)

The information contained herein is subject to change without notice.

C-1500 Series Velocity Transmitter for HVAC Application (Gas, Liquid)

Performance Specifications

Accuracy of Point Velocity
±1% of full scale

Repeatability
±0.2% of full scale

Temperature Coefficient
±0.02% of reading per˚F within ±50 ˚F of customer specified conditions.
±0.03% of reading per˚F within ±50 ˚F to 100˚C of customer specified conditions.
±0.04% of reading per ˚C within ±25 ˚C of customer specified conditions.
±0.06% of reading per ˚C within ±25 ˚C to 25 ˚C of customer specified conditions.

Pressure Coefficient
0.02% per psig for air, consult factory for other gases, Liquid.

Pesponse Time
200 milliseconds to 63% of final velocity value.

Operating Specifications (Gas)

Gases
Most non-combustible, non-corrosive gases

Mass Flow rates
0 to 200 sfpm (0 to 1 nmps)minimum, 0 to 20,000 sfpm (0 to 100 nmps)maximum for air and nitrogen(maximum full scale varies with other gases consult factory)

Gas Pressure
145 psig(10 barg) maximum.

Pressure Drop
Negligible

Gas & Ambient Temperature
Gas---14˚F to 176˚F (-10˚C to 80˚C)
Ambient---Operating : 32˚F to 122˚F(0˚C to 50˚C)
Storage : -40˚F to 180˚F(-40˚C to 80˚C)
0 to 90% relative humidity, non-condensing conditions

Power Requirements
DC 24V ±10%(regulated), 150mA maximum
Warm-up time : 10 minutes(max)

Operating Specifications (Liquid)

Flow Rates
0 to 200 sfpm(0 to 1 nmps)minimum
0 to 2000 sfpm(0 to 10 nmps)maximum

Liquid Pressure
145 psig(10 barg)maximum

Pressure Drop
Negligible

Water & Ambient Temperature
Water.....14˚F to 176˚F (-10˚C to 80˚C)
Ambient.....Operating : 32˚F to 122˚F(0˚C to 50˚C)
Storage : -40˚F to 180˚F(-40˚C to 80˚C)
0 to 90% relative humidity, non-condensing conditions

Power Requirements
DC 24V ±10%(regulated), 300mA maximum
Warm-up time : 10 minutes(max)

Operating Specifications (Gas)

Output Signal
Linear 0~10VDC, 1000 ohms minimum load resistance or
Linear 4~20 mA proportional mass flow rate.
700 ohms maximum resistance power supply dependent
User-selectable...Active non-galvanic ally seperated or
passive galvanic ally seperated
(loop power required)

Alarms
Hard contact user-adjustable high and low dead band adjustable with Smart Interface windows® softwatre
Relay ratings....Maximum 42 VDC or VAC, 140mA

Displays
Alphanumeric 2×16 digit backlight LCD
Adjustable variables via on-board switches (password protected) or with Smart Interface windows® software
Adjustable variables... Full scale (50 to 100%)
Time Response (1 to 7 seconds)
Correction factor setting (0.5 to 5)
Zero and span
High and low alarm settings

Totalize
Seven digits(9,999,999.9)in engineering units
Reset table by software, on-board switches or external magnet

Software
Smart Interface Windows®-based software minimum
8 MB of RAM, preferred 16 MB of RAM
RS-232 communication
Additional features... Alarm dead band adjustment
Zero cut-off adjustment
Linearization adjustment
Save / Load configurations
Flow meter validation

Physical Specifications

Wetted Materials
316L, 304 stainless steel

Enclosure
NEMA 4X
Powder-coated cast aluminum

Electrical Connections
One 1/2 inch NPT ... NEMA 4X Enclosure (IP65)

Mounting (Optional)
1/2-inch tube compression fitting with 1/2-inch male NPT
1/2-inch duct mounting bracket

Certifications*
CE(All Enclosures)
CSA----------
(Explosion-proof for Class1, Division1, Groups B,C,D)
EEx (EEx d IIC T6...T2)
FM----------
(Explosion-proof for Class1, Division1, Groups B,C,D)

Mass Flow Ranges (Gas)

C-1500S-Minimum pipe diameter 1″

Gas Code	Spec(%FS)	Gas	Max Vel (SFPM)	Max Vel (NMPS)	Max psig
0	Standard accuracy	Air	20,000	102	145
1	Standard accuracy	Argon	28,000	142	145
2	Standard accuracy	CO_2	20,800	106	145
6	Standard accuracy	Helium	12,400	63	145
10	Standard accuracy	N_2	19,800	101	145
99	Other - consult factory				

Table

Length Chart		
Code	L	X
L06	6,0 (152,4)	8,6 (218,4)
L09	9,0 (228,6)	11,6 (294,6)
L13	13,0 (330,2)	15,6 (396,2)
L18	18,0 (457,2)	20,6 (523,2)
L24	24,0 (609,6)	26,6 (675,6)
L36	36,0 (914,4)	38,6 (980,4)

Dimensional Specification

Compression Fitting-Front View (EN2)

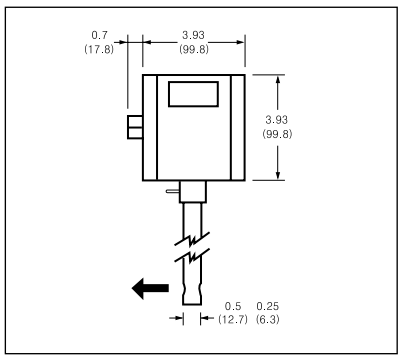

Compression Fitting-Side View (EN2)

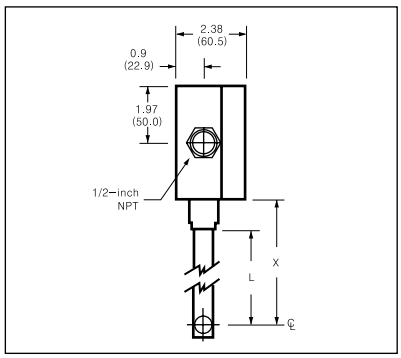

Remote Mount Junction Box-Front(EN4)

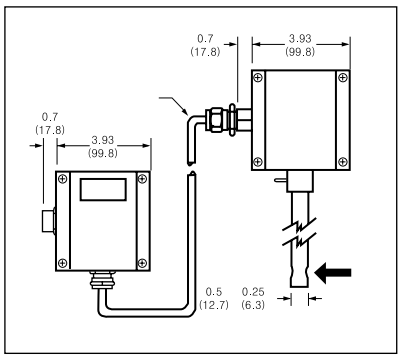

Remote Mount Junction Box-Side(EN4)

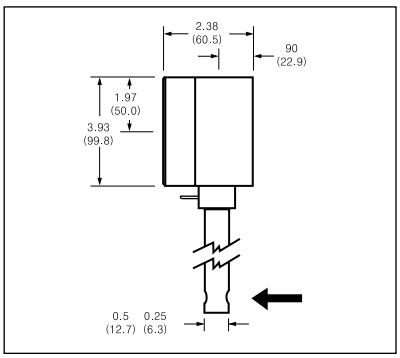

C-1800

Mini Flow Type Mass Flow Meter



Features

- Fast response flow meter ideal for inert gas and liquid mass flow measurement applications
- Smart electronics permit field adjustment of critical flow meter settings
- Field validation of flow meter cailbration
- 200 millisecond response to changes in flow rate
- Outsfanding range ability
- Optional 2×16 backlight LCD display
- Minimal flow blockage and low pressure drop
- RS-232 communication
- Gas & Liquid

Description

Flow Series C-1800S Smart Insertion mass flow meter provides an alternative for inert gas and clean water flow measurement applications. The meters sensor offers long-term reliability and 200 millisecond response to changes in flow rate.

The versatile microprocessor-based transmitter integrates the functions of flow-range adjustmentm meter validation and diagnostics in a probe-meuntde NEMA 4X (IP65) housing, Mass flow rate and totalized flow,as well as other configuration variables, can be displayed on the meters optional 2×16 backlight LCD panel,

The meter also provides an optical / galvanic isolated 4-20 mA,0-10VDC output and two alam outputs.

The programmable transmitter is easily configured via RS-232 and Smart Interface Windows®-based software minimum 8 MBof RAM, preferred 16 MB of RAM.

The information contained herein is subject to change without notice.

C-1800 Series Hi-Flow Gas Mass or Liquid Flow Meter with Digital Display

Dimensional Specification

Series C-1810 Side View

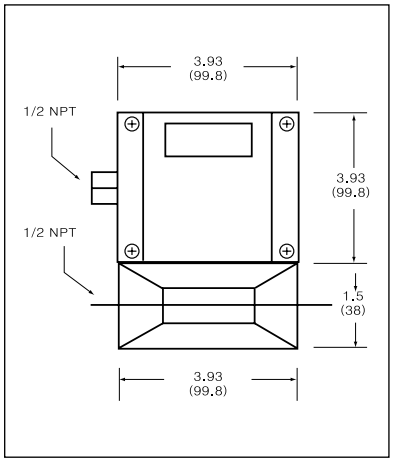

HFC-1810S-W-N2-EN2-P2

Series C-1810 – Outlet View

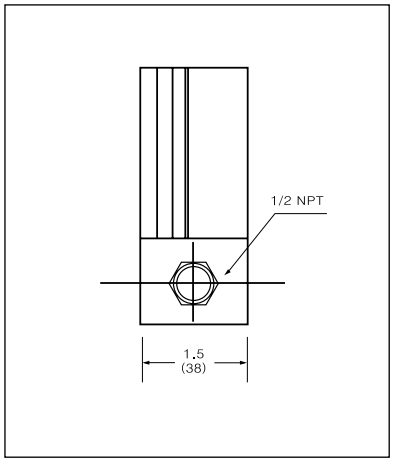

HFC-1810S-W-N2-EN2-P2

Series C-1810 – Bottom View

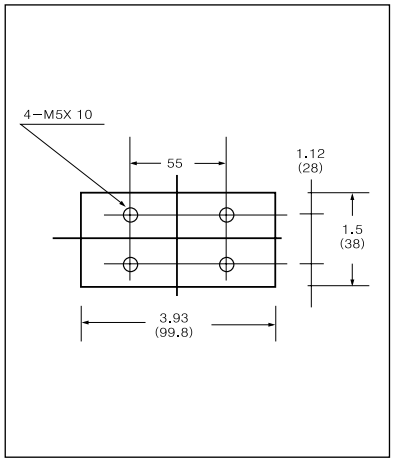

HFC-1810S-W-N2-EN2-P2

All dimensions are inches and in parentheses are millimeters. Certified drawings are available on request.

Performance Specifications

Accuracy

±1% of full scale including linearity over15° to 25°C and 5 to 60 psig (0.3 to 4 barg)
If the meter is mounted with a vetical (up or down) flow path the follwing accuracy de-rating applies;

	OPERATING PRESSURE (Gas)		
Inlet Pressure Deviation*	50 psig	100 psig	150 psig
± 1 psig	± 1.5% of full scale	± 1.5% of full scale	± 1.5% of full scale
± 5 psig	± 3.8% of full scale	± 4.5% of full scale	± 5.3% of full scale
± 10 psig	± 6% of full scale	± 7.5% of full scale	± 9% of full scale

Notes : (1) Do not exceed ±145 psig.
(2) Difference between inlet pressure and calibrated pressure
Do not exceed ±10 psig.

Repeatability

±0.5% of full scale

Temperature Coefficient

0.08% of full scale per °F(0.15% of full scale per °C), or better

Pressure Coefficient

0.01% of full scale per psig (0.15% of full scale per barg), or better

Response Time

800 ms time constant; six seconds (typical) within ±2% of final value over 25 to 100% of full scale

Operating Specifications

Fluid

Clean Gas, Air, Clean water, specify when ordering.

Flow Rates

Gas : 1-100 SLPM to 0-500 SLPM (50 m/s)
Liquid : 0-10 SLPM to 0-100 SLPM (10 m/s)

Fluid Pressure

145 psig(10 barg) maximum
20 psig(1.4 barg) optimum

Fluid & Ambient Temperature

Fluid : 14°F to 176°F (-10°C to 80°C)
Ambient : 32°F to 122°F (0°C to 50°C)

Leak Integrity

1×10^{-4} atm cc/sec of helium maximum

Pressure Drop

Gas		Liquid	
Flow Rate	Cm of water	Flow Rate	Cm of water
50 SLPM		10 SLPM	
100 SLPM		20 SLPM	
150 SLPM		40 SLPM	
200 SLPM		60 SLPM	
300 SLPM		70 SLPM	
400 SLPM		80 SLPM	
500 SLPM		100 SLPM	

Power Requirements

Gas : DC24 V ±10% (regulated), 150 mA maximutm
Liquid : DC24 V ±10% (regulated), 300 mA maximutm

Operating Specifications

Output Signal
Linear 0~10 VDC, 1000 ohms minimum load resistance or
Linear 4~20 mA proportional mass flow rate.
700 ohms maximum resistance power supply dependent
User-selectable...Active non-galvanic ally separated or
Passive galvanic ally separated
(loop power required)

Alarms
Hard contact user-adjustable high and low dead band adjustalble with Smart Interface™ software
Relay ratings... Maximum 42 VDC or VAC, 140 mA

Displays
Alphanumeric 2×16 digit backlight LCD
Adjustable variables via on-board switches (password protected) or
with Smart Interface windows® software
Adjustable variables... Full scale (50 to 100 %)
Time Response(1 to 7 seconds)
Corretion factor setting (0.5 to 5)
Zero and span
High and low alarm settings

Totalize
Seven digits (9,999,999.9) in engineering units
Reset table by software, on-board switches or extemal magnet

Softward
Smart Interface Windows® -based sofrware minimum 8MB of RAM, preferred 16 MB of RAM
RS-232 communication
Additional features ... Alarm dead band adjustment
Zero cut-off adjustment
Linearization adjustment
Save / Load configurations
Flow meter validation

Physical Specifications

Wetted Materials
316L, 304 stainless steel

Enclosure
NEMA 4X
(IP65)
Powder-coated cast aluminum

Electrical Connections
One1/2 inch NPT... NEMA 4X Enclosure (IP65)

Certifications*
CE (All enclosures)
CSA (Explosion-proof for Class, Division 1, Groups B, C, D)
EEx (EEx d IIC T6...T2)
FM (Explosion-proof for Class 1, Division 1, Groups B, C, D)

C-3100

Stack Type Mass Flow Meter



Features

- Close loop control
- 24 bit Analog digital converter(ADC)
- Output accuracy ±0.1%, ±2.5μA(4-20mA)
  Output accuracy ±0.01%, 1mV(0~10VDC)
- Field adjustment or critical flow meter settings Smart interface (RS-232)
- Field validation of flow meter calibration
- Direct mass flow monitoring eliminates need for temperature and pressure compensation
- Greatly reduces upstream piping requirements
- Outstanding Range ability
- One-second response to changes in flow rate
- CE, EEx, CENELEC (Pending)

Description

C-3100S Smart Insertion mass flow meter accommodates the change measurement requirements and instrument-validation demands of industrial gas flow monitoring installations.

The versatile microprocessor-based transmitter integrates the functions of flow-measurement, flow-range adjustment, meter validation and diagnostics, in either a probe-mounted or remote housing.

Mass flow rate and totalized flow, as well as other configuration variables, are displayed on the meter's optional 2×16 LCD panel. The programmable transmitter is easily configured via an RS-232 communication port and Smart Interface™ software, or via the display and magnetic switches on the instrument panel.

The C-3100S allows you to configure or change the following password protected parameters ; flow range, totalize, alarm settings, time response, low flow cutoff and a calibration correction factor that compensates for flow profile flow variations.

Smart Interface™ software guides you through a procedure to fully validate instrument performance.

The meter is available with a variety of input power, output signal, mounting and packaging options.

The information contained herein is subject to change without notice.

C-3100 Series Smart-IN™ Mass Flow Meter

Performance Specifications

Accuracy of Point Velocity
±2% of reading from 10 to 100% of calibrated range
±0.5% of full scale below 10% of calibrated range

Repeatability
±0.2% of full scale

Temperature Coefficient
±0.02% of reading per °F within ±50 °F of customer specified conditions.
±0.03% of reading per °F within ±50°F to 100°F of customer specified conditions.
±0.04% of reading per °C within ±25°C of customer specified conditions.
±0.06% of reading per °C within ±25°C to 50°C of customer specified conditions.

Pressure Coefficient
0.02% per psi for air, consult factory for other gases.

Response Time
One second 63% of final velocity value.

Operating Specifications

Gases
Most gases compatible with 316L stainless steel

Gas Pressure(2 Limitations)
Compression fittings : 500 psig(34 barg)
1-inch 150lb flange(-40°F to 150°F) : 185 psig(12.8 barg)
Low pressure Hot Tap : 100 psig(7 barg)
High pressure Hot Tap : 1000 psig(70 barg)
Application gas pressure :
See mass flow range tables for maximum application gas pressure.

Pressure Drop
Neligible for pipes three inches in diameter or larger

Gas & Ambient Temperature
Gas.....15°F to 250°F(-10°C to 120°C)
Optional -40°F to 450°F(-40°C to 230°C)
Application dependant
Higher temperature available, consult factory
Ambient...-5°F to 120°F(-20°C to 50°C)

Leak Integrity
5×10^{-4}atm cc/sec of helium maximum

Power Requirements
DC 24V ±10% (regurated), 625mA maximum
220VAC ±10% (regurated), 15watts maximum

Output Signal
Linear 0~10 VDC, 1000ohms minimum load resistance or
Linear 4~20mA proportional mass flow rate.
700 ohms maximum resistance power supply dependent
User-selectable...Active non-galvanically seperated or
passive galvanically seperated(loop power required)

Alarms
Hard contact user-adjustable high and low
Dead band adjustable with Smart Interface™ software
Relay ratings-maximum 42 VDC or VAC, 140mA

Displays
Alphanumeric 2×16 digit backlight LCD
Adjustable variables via on-board switches (password protected) or with Smart Interface™ software
Adjustable variables---Full scale(50 to 100%)
Time Response(1 to 7 seconds)
Correction factor setting(0.5 to 5)
Zero and span
High and low alarm settings

Totalize
Seven digits(9,999,999.9)in engineering units
Reset table by software, on-board switches or external magnet

Software
Smart Interface™ Windows®-bases software minimum 8 MB of RAM, preferred 16 MB of RAM
RS-232 communication
Additional features---Alarm dead band adjustment
Zero cut-off adjustment
Linearization adjustment
Save/Load configurations
Flow meter validation

Physical Specifications

Wetted Materials
316L stainless steel

Enclosure
Hazadous-Area Location Enclosure(IP67) or NEMA 4X(IP65)
Both are powder-coated cast aluminum

Electrical Connections
Two 3/4 inch NPT ..... Hazardos-Area Location Enclosure(IP67)
One 1/2 inch NPT ..... NEMA 4X Enclosure(IP65)

Mounting (optional)
ANSI 1-inch 150 lb flange
3/4-inch tube compression fitting with 1-inch male NPT.
Hot tap systems

Certifications*
CE (All enclosures)
CSA (Explosion-proof for Class 1, Division 1, Groups B,C,D)
EEx (EEx d IIC T6 · · · T2)
FM (Explosion-proof for Class 1, Division 1, Groups B,C,D)

Mass Flow Ranges

EEx approved meters maximum velocities and flow rate are 50% of standard values shown in charts.

C-3100S - Air - Gas Code 0 Application Temp. = 15-250°F

Spec (%rdg)	Pipe Size	Area (SqFt)	Max Vel (SFPM)	Max (SCFM)	Max nm³/hr	Max PSIG
standard accuracy	1"	0.0060	20,000	120	189	120
standard accuracy	1~1/2"	0.0142	20,000	264	448	120
standard accuracy	2"	0.0233	20,000	466	735	120
standard accuracy	3"	0.0513	20,000	1026	1618	120
standard accuracy	4"	0.0884	20,000	1768	2788	120
standard accuracy	6"	0.2010	20,000	4020	6340	120
standard accuracy	8"	0.3470	20,000	6940	10945	120
standard accuracy	10"	0.5480	20,000	10960	17285	120
standard accuracy	12"	0.7770	20,000	15540	24508	120
standard accuracy	14"	0.9390	20,000	18780	29618	120
standard accuracy	16"	1.2270	20,000	24540	38703	120
standard accuracy	18"	1.5530	20,000	31060	48985	120
standard accuracy	24"	2.7920	20,000	55840	88066	120
standard accuracy	36"	6.4920	20,000	129840	204773	120

C-3100S - Argon-Gas Code 1 Application Temp. = 15-250°F

Spec (%rdg)	Pipe Size	Area (SqFt)	Max Vel (SFPM)	Max (SCFM)	Max nm³/hr	Max PSIG
standard accuracy	1"	0.0060	28,000	168	265	120
standard accuracy	1~1/2"	0.0142	28,000	398	627	120
standard accuracy	2"	0.0233	28,000	652	1029	120
standard accuracy	3"	0.0513	28,000	1436	2265	120
standard accuracy	4"	0.0884	28,000	2475	3904	120
standard accuracy	6"	0.2010	28,000	5628	8876	120
standard accuracy	8"	0.3470	28,000	9716	15324	120
standard accuracy	10"	0.5480	28,000	15344	24199	120
standard accuracy	12"	0.7770	28,000	21756	34312	120
standard accuracy	14"	0.9390	28,000	26292	41486	120
standard accuracy	16"	1.2270	28,000	34356	54184	120
standard accuracy	18"	1.5530	28,000	43484	68579	120
standard accuracy	24"	2.7920	28,000	78176	123293	120
standard accuracy	36"	6.4920	28,000	181776	286683	120

C-3100S - CO2 -Gas Code 2 Application Temp. = 15-250°F

Spec (%rdg)	Pipe Size	Area (SqFt)	Max Vel (SFPM)	Max (SCFM)	Max nm³/hr	Max PSIG
standard accuracy	1"	0.0060	19,800	119	187	120
standard accuracy	1~1/2"	0.0142	19,800	281	443	120
standard accuracy	2"	0.0233	19,800	461	728	120
standard accuracy	3"	0.0513	19,800	1016	1602	120
standard accuracy	4"	0.0884	19,800	1750	2760	120
standard accuracy	6"	0.2010	19,800	3980	6277	120
standard accuracy	8"	0.3470	19,800	6871	10836	120
standard accuracy	10"	0.5480	19,800	10650	17112	120
standard accuracy	12"	0.7770	19,800	15385	24263	120
standard accuracy	14"	0.9390	19,800	18592	29322	120
standard accuracy	16"	1.2270	19,800	24295	38316	120
standard accuracy	18"	1.5530	19,800	30749	48495	120
standard accuracy	24"	2.7920	19,800	55282	87186	120
standard accuracy	36"	6.4920	19,800	128542	202726	120

C-3100S - Chlorine-Gas Code 3 Appilcation Temp. = 50-90°F

Spec (%rdg)	Pipe Size	Area (SqFt)	Max Vel (SFPM)	Max (SCFM)	Max nm³/hr	Max PSIG
5% correlation	1"	0.0060	3,261	1.5	1	120
5% correlation	1~1/2"	0.0142	3,333	6.5	10	120
5% correlation	2"	0.0233	3,380	12.0	19	120
5% correlation	3"	0.0513	3,333	20	32	120
5% correlation	4"	0.0884	3,169	45	71	120
5% correlation	6"	0.2010	3,219	75	118	120
5% correlation	8"	0.3470	3,411	175	276	120

C-3100S - Air - Gas Code 0 Application Temp. = 15-250°F

Spec (%rdg)	Pipe Size	Area (SqFt)	Max Vel (SFPM)	Max (SCFM)	Max nm³/hr	Max PSIG
standard accuracy	1"	0.0060	17,200	103	163	30
standard accuracy	1~1/2"	0.0142	17,200	244	385	30
standard accuracy	2"	0.0233	17,200	401	632	30
standard accuracy	3"	0.0513	17,200	882	1392	30
standard accuracy	4"	0.0884	17,200	1520	2398	30
standard accuracy	6"	0.2010	17,200	3457	5452	30
standard accuracy	8"	0.3470	17,200	5968	9413	30
standard accuracy	10"	0.5480	17,200	9426	14865	30
standard accuracy	12"	0.7770	17,200	13364	21077	30
standard accuracy	14"	0.9390	17,200	16151	25472	30
standard accuracy	16"	1.2270	17,200	21104	33284	30
standard accuracy	18"	1.5530	17,200	26712	42127	30
standard accuracy	24"	2.7920	17,200	48022	75737	30
standard accuracy	36"	6.4920	17,200	111662	176105	30

C-3100S - Digester-Gas Code 5 Application Temp. = 15-250°F

Spec (%rdg)	Pipe Size	Area (SqFt)	Max Vel (SFPM)	Max (SCFM)	Max nm³/hr	Max PSIG
4% correlation	1"	0.0060	17,200	103	163	120
4% correlation	1~1/2"	0.0142	17,200	244	385	120
4% correlation	2"	0.0233	17,200	401	632	120
4% correlation	3"	0.0513	17,200	882	1392	120
4% correlation	4"	0.0884	17,200	1520	2398	120
4% correlation	6"	0.2010	17,200	3457	5452	120
4% correlation	8"	0.3470	17,200	5968	9413	120
4% correlation	10"	0.5480	17,200	9426	14865	120
4% correlation	12"	0.7770	17,200	13364	21077	120
4% correlation	14"	0.9390	17,200	16151	25472	120
4% correlation	16"	1.2270	17,200	21104	33284	120
4% correlation	18"	1.5530	17,200	26712	42127	120
4% correlation	24"	2.7920	17,200	48022	75737	120
4% correlation	36"	6.4920	17,200	111662	176105	120

C-3100S - Digester-Gas Code 6 Application Temp. = 15-250°F

Spec (%rdg)	Pipe Size	Area (SqFt)	Max Vel (SFPM)	Max (SCFM)	Max nm³/hr	Max PSIG
standard accuracy	1"	0.0060	12,400	74	117	120
standard accuracy	1~1/2"	0.0142	12,400	176	287	120
standard accuracy	2"	0.0233	12,400	289	456	120
standard accuracy	3"	0.0513	12,400	636	1003	120
standard accuracy	4"	0.0884	12,400	1096	1729	120
standard accuracy	6"	0.2010	12,400	2492	3931	120
standard accuracy	8"	0.3470	12,400	4303	6786	120
standard accuracy	10"	0.5480	12,400	6795	10717	120
standard accuracy	12"	0.7770	12,400	9635	15195	120
standard accuracy	14"	0.9390	12,400	11644	18363	120
standard accuracy	16"	1.2270	12,400	15215	23996	120
standard accuracy	18"	1.5530	12,400	19257	30371	120
standard accuracy	24"	2.7920	12,400	34621	54601	120
standard accuracy	36"	6.4920	12,400	80501	126959	120

Mass Flow Ranges

EEx approved meters maximum velocities and flow rate are 50% of standard values shown in charts.

C-3100S - Hydrogen - Gas Code 7 Application Temp. = 50-90℉

Spec (%rdg)	Pipe Size	Area (SqFt)	Max Vel (SFPM)	Max (SCFM)	Max nm³/hr	Max PSIG
standard accuracy	1"	0.0060	9,600	58	91	135
standard accuracy	1~1/2"	0.0142	7,042	100	158	135
standard accuracy	2"	0.0233	4,290	100	158	135
standard accuracy	3"	0.0513	1,950	100	158	135
standard accuracy	4"	0.0884	1,130	100	158	135
standard accuracy	6"	0.2010	500	100	158	135
standard accuracy	8"	0.3470	290	100	158	135
See chart below for flows greater than 100 SCFM						
standard accuracy	1~1/2"	0.0142	9,600	136	215	85
standard accuracy	2"	0.0233	9,600	224	354	85
standard accuracy	3"	0.0513	4,873	250	395	85
standard accuracy	4"	0.0884	2,828	250	395	85
standard accuracy	6"	0.2010	1,243	250	395	85
standard accuracy	8"	0.3470	720	250	395	85
See chart below for flows greater than 250 SCFM						
standard accuracy	3"	0.0513	7,797	400	630	ambinet
standard accuracy	4"	0.0884	4,525	400	630	ambinet
standard accuracy	6"	0.2010	1,990	400	630	ambinet
standard accuracy	8"	0.3470	1,153	400	630	ambinet

C-3100S - CH_4-Gas Code 8 Application Temp. = 15-250℉

Spec (%rdg)	Pipe Size	Area (SqFt)	Max Vel (SFPM)	Max (SCFM)	Max nm³/hr	Max PSIG
standard accuracy	1"	0.0060	16,000	96	151	30
standard accuracy	1~1/2"	0.0142	16,000	227	358	30
standard accuracy	2"	0.0233	16,000	373	588	30
standard accuracy	3"	0.0513	16,000	821	1295	30
standard accuracy	4"	0.0884	16,000	1414	2231	30
standard accuracy	6"	0.2010	16,000	3216	5072	30
standard accuracy	8"	0.3470	16,000	5552	8756	30
standard accuracy	10"	0.5480	16,000	8768	13828	30
standard accuracy	12"	0.7770	16,000	12432	19607	30
standard accuracy	14"	0.9390	16,000	15024	23695	30
standard accuracy	16"	1.2270	16,000	19632	30962	30
standard accuracy	18"	1.5530	16,000	24848	39188	30
standard accuracy	24"	2.7920	16,000	44672	70453	30
standard accuracy	36"	6.4920	16,000	102872	163819	30

C-3100S - CH_4 -Gas Code 9 Application Temp. = 15-250℉

Spec (%rdg)	Pipe Size	Area (SqFt)	Max Vel (SFPM)	Max (SCFM)	Max nm³/hr	Max PSIG
4% correlation	1"	0.0060	16,000	96	151	120
4% correlation	1~1/2"	0.0142	16,000	227	358	120
4% correlation	2"	0.0233	16,000	373	588	120
4% correlation	3"	0.0513	16,000	821	1295	120
4% correlation	4"	0.0884	16,000	1414	2231	120
4% correlation	6"	0.2010	16,000	3216	5072	120
4% correlation	8"	0.3470	16,000	5552	8756	120
4% correlation	10"	0.5480	16,000	8768	13828	120
4% correlation	12"	0.7770	16,000	12432	19607	120
4% correlation	14"	0.9390	16,000	15024	23695	120
4% correlation	16"	1.2270	16,000	19632	30962	120
4% correlation	18"	1.5530	16,000	24848	39188	120
4% correlation	24"	2.7920	16,000	44672	70453	120
4% correlation	36"	6.4920	16,000	102872	163819	120

C-3100S - Nitrogen - Gas Code 10 Application Temp. = 15-250℉

Spec (%rdg)	Pipe Size	Area (SqFt)	Max Vel (SFPM)	Max (SCFM)	Max nm³/hr	Max PSIG
standard accuracy	1"	0.0060	19,800	119	187	120
standard accuracy	1~1/2"	0.0142	19,800	281	443	120
standard accuracy	2"	0.0233	19,800	461	728	120
standard accuracy	3"	0.0513	19,800	1016	1602	120
standard accuracy	4"	0.0884	19,800	1750	2760	120
standard accuracy	6"	0.2010	19,800	3980	6277	120
standard accuracy	8"	0.3470	19,800	6871	10836	120
standard accuracy	10"	0.5480	19,800	10650	17112	120
standard accuracy	12"	0.7770	19,800	15385	24263	120
standard accuracy	14"	0.9390	19,800	18592	29322	120
standard accuracy	16"	1.2270	19,800	24295	38316	120
standard accuracy	18"	1.5530	19,800	30749	48495	120
standard accuracy	24"	2.7920	19,800	55282	87186	120
standard accuracy	36"	6.4920	19,800	128542	202726	120

C-3100S - Oxygen-Gas Code 11 Application Temp. = 15-250℉

Spec (%rdg)	Pipe Size	Area (SqFt)	Max Vel (SFPM)	Max (SCFM)	Max nm³/hr	Max PSIG
4% correlation	1"	0.0060	19,800	119	187	120
4% correlation	1~1/2"	0.0142	19,800	281	443	120
4% correlation	2"	0.0233	19,800	461	728	120
4% correlation	3"	0.0513	19,800	1016	1602	120
4% correlation	4"	0.0884	19,800	1750	2760	120
4% correlation	6"	0.2010	19,800	3980	6277	120
4% correlation	8"	0.3470	19,800	6871	10836	120
4% correlation	10"	0.5480	19,800	10650	17112	120
4% correlation	12"	0.7770	19,800	15385	24263	120
4% correlation	14"	0.9390	19,800	18592	29322	120
4% correlation	16"	1.2270	19,800	24295	38316	120
4% correlation	18"	1.5530	19,800	30749	48495	120
4% correlation	24"	2.7920	19,800	55282	87186	120
4% correlation	36"	6.4920	19,800	128542	202726	120

C-3100S - Propane-Gas Code 12 Application Temp = 15-250℉

Spec (%rdg)	Pipe Size	Area (SqFt)	Max Vel (SFPM)	Max (SCFM)	Max nm³/hr	Max PSIG
standard accuracy	1"	0.0060	13,200	79	125	30
standard accuracy	1~1/2"	0.0142	13,200	187	296	30
standard accuracy	2"	0.0233	13,200	308	485	30
standard accuracy	3"	0.0513	13,200	677	1068	30
standard accuracy	4"	0.0884	13,200	1167	1840	30
standard accuracy	6"	0.2010	13,200	2653	4184	30
standard accuracy	8"	0.3470	13,200	4580	7224	30
standard accuracy	10"	0.5480	13,200	7234	11408	30
standard accuracy	12"	0.7770	13,200	10256	16176	30
standard accuracy	14"	0.9390	13,200	12395	19548	30
standard accuracy	16"	1.2270	13,200	16196	25544	30
standard accuracy	18"	1.5530	13,200	20500	32330	30
standard accuracy	24"	2.7920	13,200	36854	58124	30
standard accuracy	36"	6.4920	13,200	85694	135150	30

C-3100S - Propane-Gas Code 13 Application Temp. = 15-250℉

Spec (%rdg)	Pipe Size	Area (SqFt)	Max Vel (SFPM)	Max (SCFM)	Max nm³/hr	Max PSIG
4% correlation	1"	0.0060	13,200	79	125	120
4% correlation	1~1/2"	0.0142	13,200	187	296	120
4% correlation	2"	0.0233	13,200	308	485	120
4% correlation	3"	0.0513	13,200	677	1068	120
4% correlation	4"	0.0884	13,200	1167	1840	120
4% correlation	6"	0.2010	13,200	2653	4184	120
4% correlation	8"	0.3470	13,200	4580	7224	120
4% correlation	10"	0.5480	13,200	7234	11408	120
4% correlation	12"	0.7770	13,200	10256	16176	120
4% correlation	14"	0.9390	13,200	12395	19548	120
4% correlation	16"	1.2270	13,200	16196	25544	120
4% correlation	18"	1.5530	13,200	20500	32330	120
4% correlation	24"	2.7920	13,200	36854	58124	120
4% correlation	36"	6.4920	13,200	85694	135150	120

Dimensional Specifications

Compression Fitting – Front View(E2)

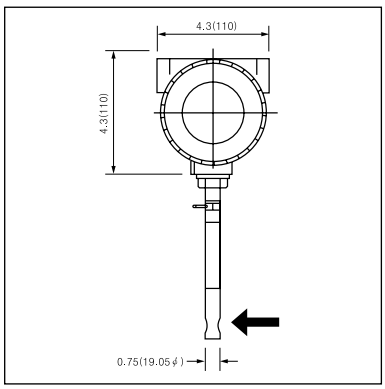

Compression Fitting – Side View (E2)

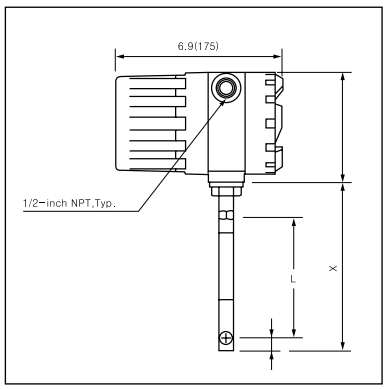

Flange Mounting – Front View (E2)

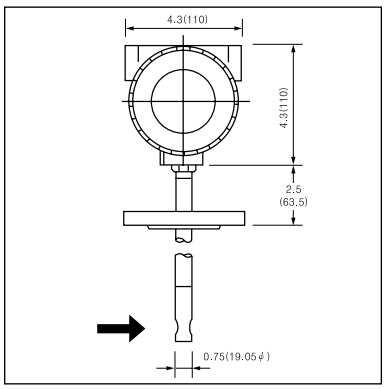

Flange Mounting – Side View (E2)

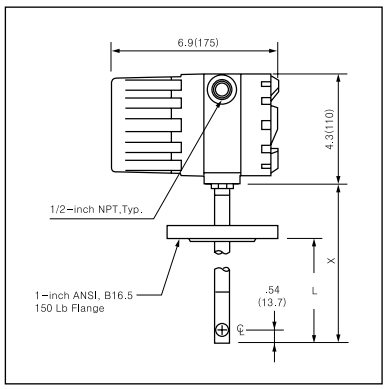

Remote Mount Junction Box – Front View (E4)

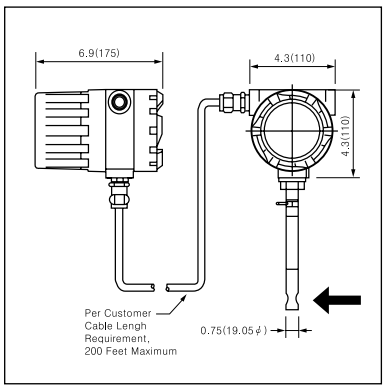

Remote Mount Junction Box – Side View (E4)

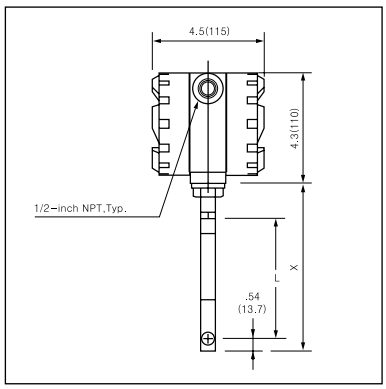

Remote Mount – Front View (E3, EEx only)

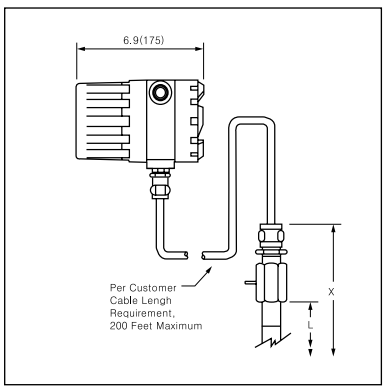

Remote Mount – Side View (E3, EEx only)

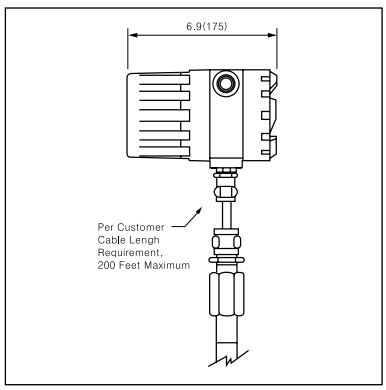

Mounting Holes for Remote Bracket

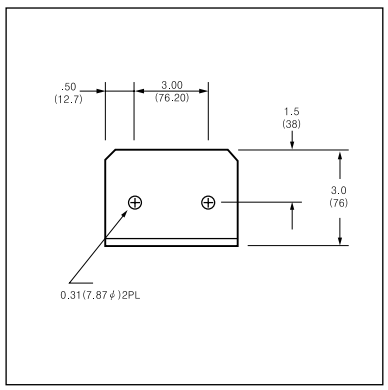

Tables

Length Chart		
Code	L	X
L06	6,0 (152,4)	7,0 (177,8)
LO9	9,0 (228,6)	10,0 (254,0)
L13	13,0 (330,2)	14,0 (355,6)
L18	18,0 (457,2)	19,0 (482,6)
L24	24,0 (609,6)	25,0 (635,0)
L36	36,0 (914,4)	37,0 (939,8)

Length Chart		
Code	L	X
L06	6,0 (152,4)	9,0 (228,6)
LO9	9,0 (228,6)	12,0 (304,8)
L13	13,0 (330,2)	16,0 (406,4)
L18	18,0 (457,2)	21,0 (533,4)
L24	24,0 (609,6)	27,0 (685,8)
L36	36,0 (914,4)	39,0 (990,6)

Length Chart		
Code	L	X
L06	6,0 (152,4)	7,5 (190,5)
LO9	9,0 (228,6)	10,5 (266,7)
L13	13,0 (330,2)	14,5 (368,3)
L18	18,0 (457,2)	19,5 (495,3)
L24	24,0 (609,6)	25,5 (647,7)
L36	36,0 (914,4)	37,5 (952,5)

All dimensions are inches, Millimeters are in parentheses, Certified drawings are available on request.

Dimensional Specifications (I)

Remote Rear Bracket Mounted Electronics

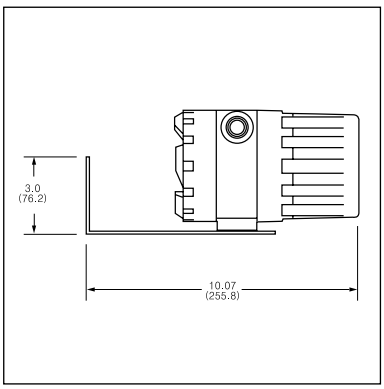

Remote Side Bracket Mounted Electronics

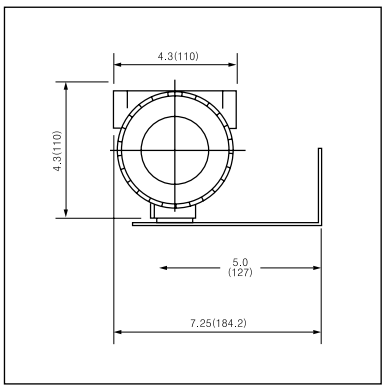

Tables

Length Chart		
Code	L	X
L06	6.1 (154.9)	7.1 (180.3)
LO9	9.1 (231.1)	10.1 (256.5)
L13	13.1 (322.7)	14.1 (358.1)
L18	18.1 (459.7)	19.1 (485.1)
L24	24.1 (612.1)	25.1 (637.5)
L36	36.1 (916.9)	37.1 (942.3)

Dimensional Specifications

Compression Fitting – Front View (EN2)

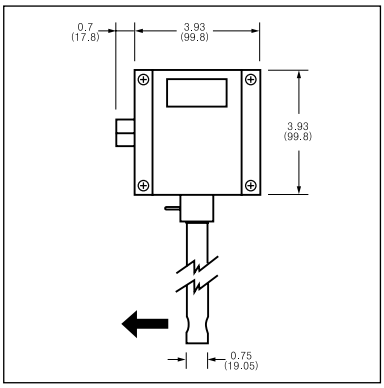

Compression Fitting – Side View (EN2)

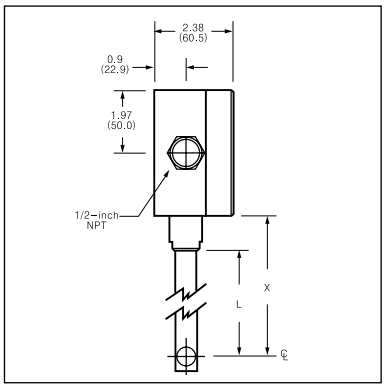

Remote Mount Junction Box – Front View (EN4)

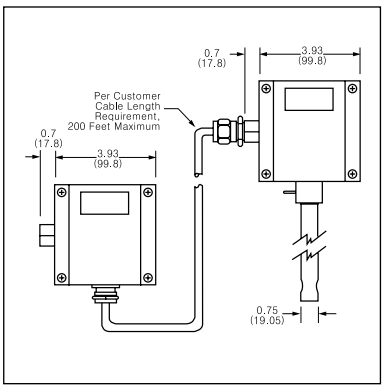

Remote Mount Junction Box – Side View (EN4)

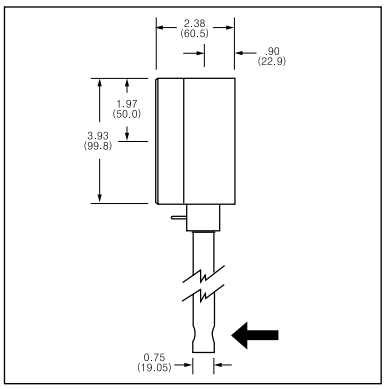

Tables

Length Chart		
Code	L	X
L06	6.0 (152.4)	8.6 (218.4)
LO9	9.0 (228.6)	11.6 (294.6)
L13	13.0 (330.2)	15.6 (396.2)
L18	18.0 (457.2)	20.6 (523.2)
L24	24.0 (609.6)	26.6 (675.6)
L36	36.0 (914.4)	38.6 (980.4)

All dimensions are inches, Millimeters are in parentheses. Alldrawings have a ±0.25 inch(6.4mm) tolerance.
Certified drawings are available on request.

Low Pressure Hot Tap Dimensional Specification

Side View

VARIABLES
L=Norminal Probe Length
D=Duct O.D.
C=Duct I.d.
T=Height of "threadolet"
or Customer Provided Weldolet
R=Restraint Cable Length

FORMULA
L≥12+D/2+T
So L must be equal or greater than 12-inches plus the height of the "threadolet" plus half the duct O.D.
R=D/2+T+8.8

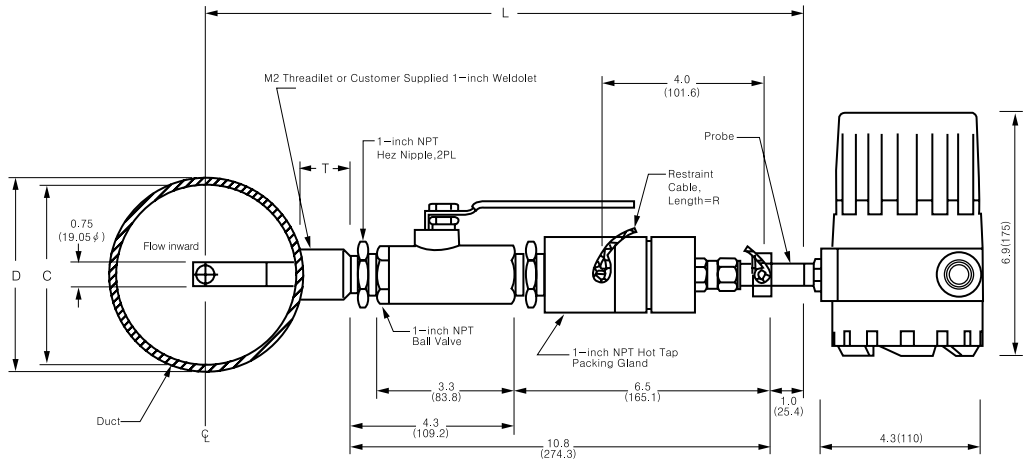

All dimensions are inches. Millimeters are in parentheses.
All drawings have a ±0.25 inch(6.4mm) tolerance, Certifide drawings are available on request.

Up & Downstream Requirements

Select an installation site that will minimize possible distortion distortion in the flow profile, Valves, elbows, control valves and other piping compinents may cause flow distrubances. Check your specific piping condition against the exampless shown below. In order to achieve accurate and repeatable performancen install the flow meter using the recommend number of straight run pioe diameters upstream and downstream of the sensor.

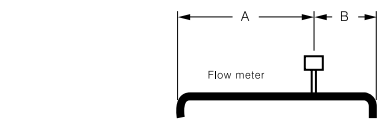

Example 1.
One 90° elbow before meter

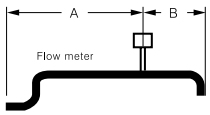

Example 2.
Two 90° elbow before meter in one plane

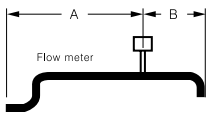

Example 3.
Two 90° elbow before meter out of plane(if three 90° bends present, double recommended length)

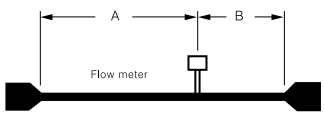

Example 4.
Reduction before meter

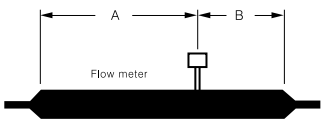

Example 5.
Expantion before meter

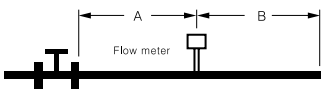

Example 6.
Regulator or valve partially closed before meter(if valve is always wide open, base lenght requirements on fitting directly precending it)

Example	A-Upstream(1)Requirements	B-Downstream(2)Requirements
1	15D	5D
2	20D	5D
3	40D	10D
4	15D	5D
5	30D	10D
6	40D	5D

(1) Number of diameter(D)of straight pipe required between upstream disturbance and the flow meter.
(2) Number of diameter(D)of straight pipe required downstream of the flow meter

C-3200

Inline Type Mass Flow Meter



Features

- Close loop control
- 24 bit Analog digital converter(ADC)
- Output accuracy ±0.1%, ±2.5μA(4~20mA)
  Output accuracy ±0.01%, ±1mv(0~10VDC)
- Field adjustment of critical flow meter
  settings Smart Interface (RS-232)
- Field validation of flow meter calbration
- Direct mass flow monitoring eliminates
  need for temperature and pressure compensation
- Greatly reduces upstream piping requirements
- Outstanding Range ability
- One-second response to changes in flow rate
- CE, EEx, CENELEC(Pending)

Description

The C-3200 Smart-IN™ flow body eliminates velocity profile distortions, swirl and tempreature stratifications in the gas stream and reduces the amount of upstream piping required for accurate flow measurement.

The versatile microprocessor-based transmitter integrates the functions of flow neasurement, flow-range adjusment, meter validation and diagnostics, in either a probe-mounted or remote housing.

Mass flow rate and totalized flow, as well as other configuration vanables, are displayed on the meter's optional 2×16 LCD panel, The programmable transmitter is easily configured via an RS-232 communication port and Smart Interface™ software,or via the display and magentic switches on the instrument panel.

The Series C-3200 allows you to conligure or change the following password protected parameters : flow range, totalize, alarm settings, time response, low flow cutoff and a calibvration correction factor that compensates for flow profile variations.

Smart Interface™ software guides you through a procedure to fully validate instrument performance.

The meter is available with a variety of input power, output signal, mounting and packaging options.

The information contained herein is subject to change without notice.

C-3200 Series Smart-IN™ FLG Mass Flow Meter

Physical Specifications

Accuracy
±2% of reading from 10 to 100% of calibrated range
±0.5% of full scale below 10% of calivrated range

Repeatability
±2% of full scale

Temperature Coefficient
±0.02% of reading per °F within ±50°F of customer specifled conditions.
±0.03% of reading per °F within ±50°F to 100°F of customer specifled conditions.
±0.04% of reading per °C within ±25°C of customer specifled conditions.
±0.06% of reading per °C within ±25°C to 50°C of customer specifled conditions.

Pressure Coefficient
0.02% per psi for air, consult factory for other gases

Response Time
One second 63% of final velocity value.

Operating Specifications

Gases
Most gases compatible with 316L, Stainless steel (consult factory)

Gas Pressure(2 limitations)
Mechanical design pressure :
Compression fittings : 500 psig(34.5 barg)
150 lb flange or PN16DIN(−40°F to 100°F)
: 230psig(15.9 barg)
150 lb flange or PN16DIN(250°F) : 185psig(12.8 barg)
150 lb flange or PN16DIN(450°F) : 155psig(10.7 barg)
NPT (−40°F to 250°F) :500psig(34.5 barg)
Application gas pressure : See mass flow range tables for maximum application gas pressures.

Pressure Drop

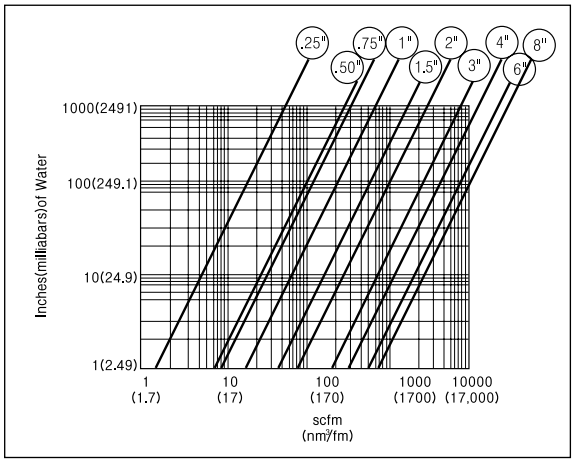

Mass Flow Ranges (Gas)

Gas & Ambient Temperature
Gas 15°F to 250°F(−10℃ to 120℃) Gas dependent.
See mass flow range tables for details
Ambient −5°F to 120°F (−20℃ to 50℃)

Leak Integrity
5×10 atm cc/sec of helium maximun

Power Requirements
DC 24 V±10% (regulated), 625mA maximum
220VAX ±10%, 50/60Hz, 15watts maximum

Output Signal
Linear 0~10 VDC, 1000 ohms minimum load resistance or
Linear 4~20mA proportional to mass flow rate,
700 ohms maximum resistance power supply dependent
User− selectable... Active non−galvanically separated or
Passive galvanically separated
(loop power required)

Alarms
Hard contact user−adjustable high and low
Dead band adjustable with Smart Interface™ software
Relay ratings− Maximum 400VDC or VAC(peak),140mA

Displays
Alphanumeric 2×16 digit backlight LCD
Adjustable variables via on−board switchs
(password protected) or with Smart Interface™ software
Adjustable variables... Full scale(50 to 100%)
Time Response (1 to 7 seconds)
Correction factor setting (0.5 to 5)
Zero and span
High and low alarm settings

Totalize
Seven digits(9,999,999.9) in engineering units
Reset table by software, on−board swithches or extenal magnet

Software
Smart Interface™ Windows®−bases software minimum 8 MB of RAM, perferred 16 MB of RAM
RS−232 communication
Additional features ... Alarm dead band adjustment
Zero cut−off adjustment
Linearization adjustmant
Save/Load configurations
Flow meter validation

Physical Specifications

Wetted Materials
316L, stainless steel
Carbon steel flow bodies available in some sizes

Enclosure
Hazadous-Area Location Enclosure(IP67) or NEMA 4X (IP65)
are powder-coated cast aluminum

Electrical Connections
Two 3/4 inch NPT... ... Hazardous-Area Location Enclosurre (IP67)
One 1/2 inch NPT... ... NEMA 4X Enclosure (IP65)

Piping Requirements

STRAIGHT PIPE LENGTH REQUIREMENTS AT 1 ATM			
Piping Condition	C-3210S Smart-IN™		Orifice Plate(3)
	Upstream(1)	Downstream(2)	
Single 90 Eblow or T-Piece	1D	0D	28D
Reduction(4:1)	3D	0D	14D
Expansion(4:1)	3D	0D	30D
After Control Valve	3D	0D	32D
Two 90 Eblow (In Same Plane)	3D	0D	36D
Two 90 Eblow (Different Planes)	5D	0D	62D

Notes : (1)Number of diamenters (D) of straight pipe required between upstream disturbance and the flow meter.
(2) Number of diameters (D) of straight pipe required downstream of the flow meter.
(3) For comparison purposes only. Table shows number of diameters (D) of upstream straght pipe length required for an ISO Standard 5167 Orifice Plate with a beta ratio of 0.7
(4) Consult factory for pressure effects.

Certificaions*
CE (All enclosures)
CSA (Explosion-proof for Class 1, Division 1, Groups B,C,D)
EEx (EEx d IIC T6... T2) CENELEC
FM (Explosion-proof for Class 1, Division 1, Groups B,C,D)

Dimensional Specifications

1/4 – inch–NPT – Front View(E2)

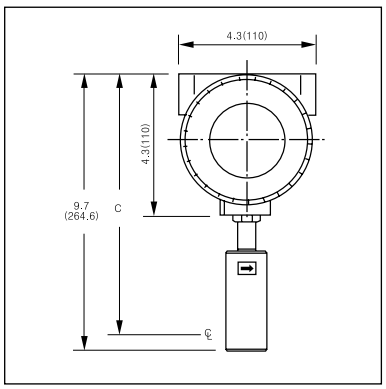

Compression Fitting – Side View (E2)

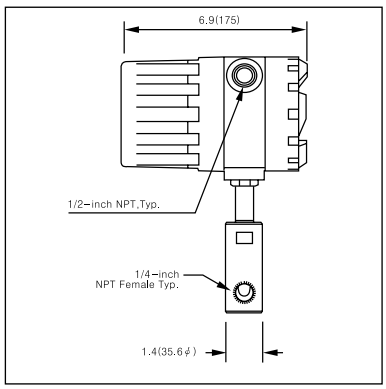

1/2, 3/4 – inch–NPT – Front View(E2)

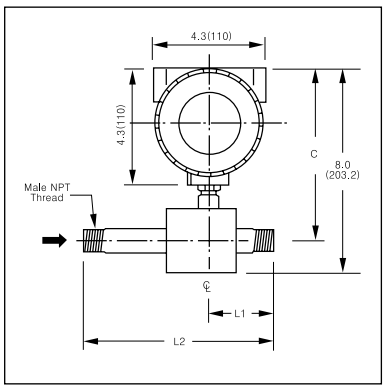

1/2, 3/4 – inch–NPT – Side View (E2)

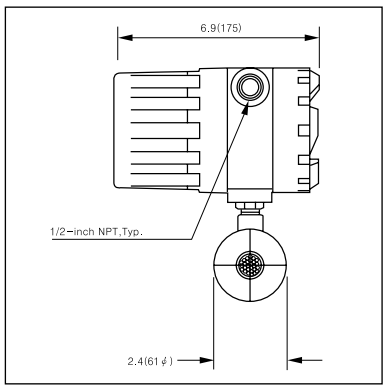

SIZES FOR NPT				
Size	H1	C	L1	L2
1/4-inch	8,41 (213,6)	9,28 (235,7)	—	—
1/2-inch	7,79 (197,9)	6,94 (176,3)	2,20 (55,9)	6,50 (165,1)
3/4-inch	7,79 (197,9)	6,94 (176,3)	2,20 (55,9)	7,00 (177,8)
1-inch	8,97 (227,8)	9,00 (228,6)	1,50 (38,1)	3,50 (88,9)
1,5-inch	8,97 (227,8)	9,00 (228,6)	2,25 (57,2)	5,25 (133,4)
2-inch	8,97 (227,8)	10,46 (265,4)	3,50 (88,9)	7,50 (190,5)
3-inch	8,97 (227,8)	11,45 (290,8)	4,00 (101,6)	10,00 (254)
4-inch	8,98 (228,1)	11,45 (290,8)	4,00 (101,6)	12,00 (304,8)
6-inch	10,98 (278,9)	12,45 (316,2)	6,00 (152,4)	18,00 (457,2)
8-inch	12,98 (329,7)	13,45 (341,6)	8,00 (203,2)	24,00 (609,6)

1–inch Through 8–inch NPT–Font View (E2)

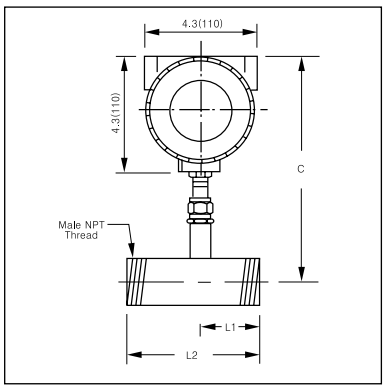

1–inch Through 8–inch NPT–Side View (E2)

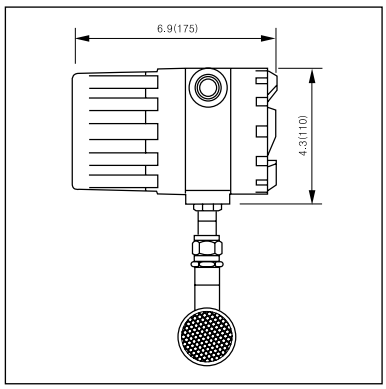

1/2, 3/4 – inch 150 lb Flange–Front View (E2)

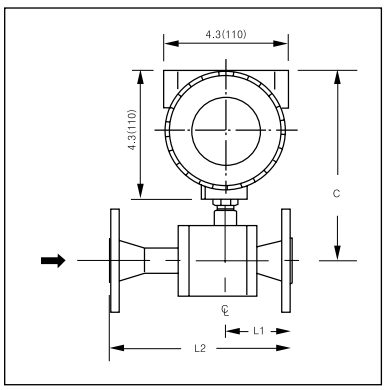

1/2, 3/4 – inch 150 lb Flange–Side View (E2)

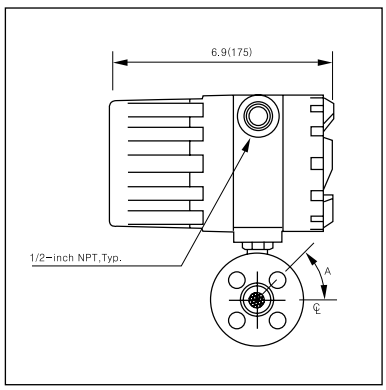

SIZES FOR 150 LB ANSI FLANGES					
Size	H1	C	L1	L2	A
1/2-inch	7,79 (197,9)	6,94 (176,3)	2,60 (66,0)	7,79 (197,9)	45°
3/4-inch	7,79 (197,7)	6,94 (176,3)	2,78 (70,6)	7,79 (197,9)	45°

Dimensional Specifications

1″ Through 8″150 lb Flange – Front View (E2)

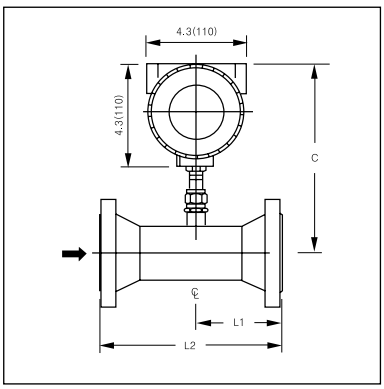

1″ Through 8″150 lb Flange – Side View (E2)

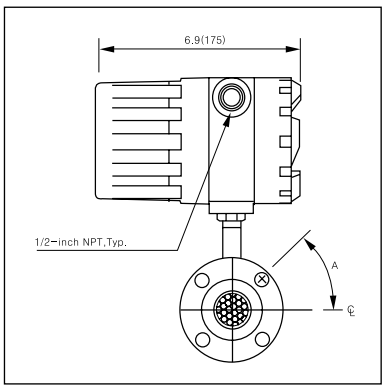

DIN Flange – Front View (E2)

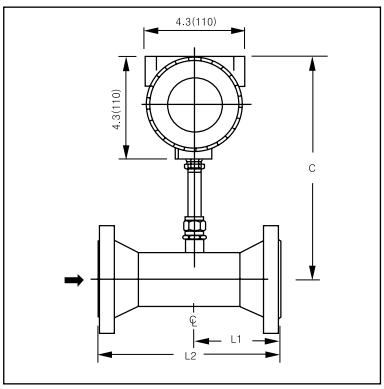

DIN Flange – Side View (E2)

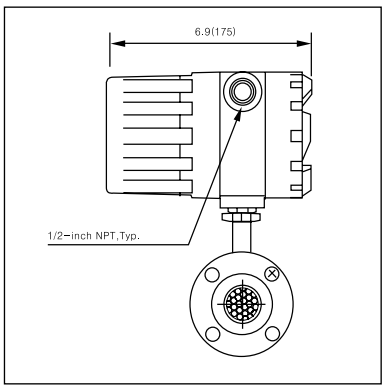

Remote Mounted With Junction Box (E4)

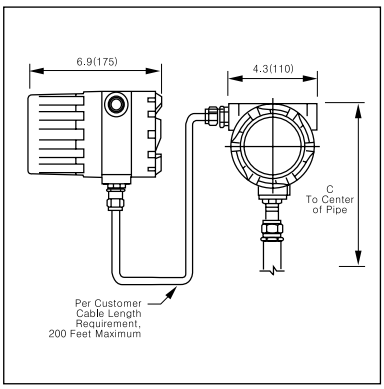

Remote Mounted

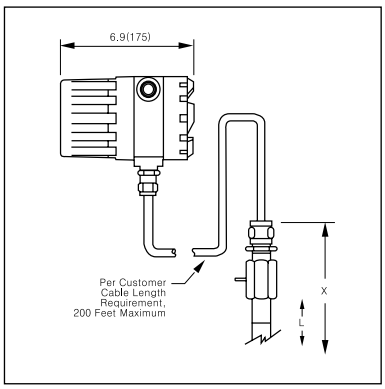

Remote Mounted With Junction Box (EN4)

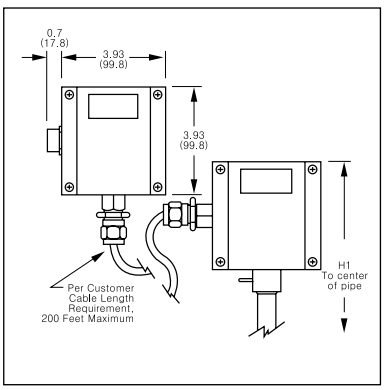

NEMA 4X Emclosure(EN2)

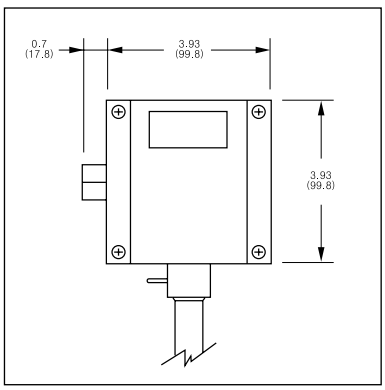

Tables

SIZES FOR 150 LB ANSI FLANGES					
Size	H1	C	L1	L2	A
1-inch	6,35 (161,3)	9,47 (240,5)	3,60 (91,4)	7,40 (188,0)	45°
1,5-inch	7,35 (186,7)	9,47 (240,5)	3,80 (96,5)	7,50 (190,5)	45°
2-inch	7,35 (186,7)	9,47 (240,5)	3,50 (88,9)	7,50 (190,5)	45°
3-inch	8,35 (212,1)	9,47 (240,5)	4,00 (101,6)	10,00 (254,0)	45°
4-inch	8,35 (212,1)	9,47 (240,5)	4,00 (101,6)	12,00 (304,8)	22,5°
6-inch	9,35 (237,5)	11,47 (291,3)	6,00 (152,4)	18,00 (457,2)	22,5°
8-inch	10,35 (262,9)	13,47 (342,1)	8,00 (203,2)	24,00 (609,6)	22,5°

SIZES FOR PN16 DIN FLANGES				
Size	H1	C	L1	L2
DIN 25	8,30 (210,8)	8,88 (225,6)	3,18 (80,8)	7,40 (188,0)
DIN 40	8,90 (226,1)	9,50 (241,3)	3,61 (91,7)	7,40 (188,0)
DIN 50	10,10 (256,5)	10,70 (271,8)	3,34 (3,34)	7,10 (180,3)
DIN 80	9,90 (251,5)	10,50 (266,7)	4,14 (105,2)	10,20 (259,1)
DIN 100	10,00 (254,0)	10,60 (269,2)	4,57 (116,1)	12,60 (320,0)
DIN 150	11,80 (299,7)	12,40 (315,0)	6,77 (172,0)	18,90 (480,1)
DIN 200	13,90 (353,1)	14,50 (368,3)	8,47 (215,1)	24,40 (619,8)

SIZES FOR REMOTE MOUNTED	
Size	H2
1/4 - inch	6,28 (159,5)
1/2 - inch	5,21 (132,3)
3/4 - inch	5,21 (132,3)
1 - inch	6,41 (162,8)
1.5 - inch	6,41 (162,8)
2 - inch	7,32 (185,9)
3 - inch	8,32 (211,3)
4 - inch	6,32 (160,5)
6 - inch	8,32 (211,3)
8 - inch	10,32 (262,1)

C-3400

Insertion Type Mass Flow Meter



Features

Insertion Tyoe Mass Flow Meter
(Model : C-3400 Serise)

Features
- Close loop control
- 24 bit Analog digital converter(ADC)
- Output accuracy ±0.1%, ±2.5μA(4-20mA)
  Output accuracy ±0.01%, 1mV(0~10VDC)
- Field adjustment or critical flow meter
  settings Smart interface (RS-232)
- Field validation of flow meter calibration
- Direct mass flow monitoring eliminates
  need for temperature and pressure compensation
- Greatly reduces upstream piping requirements
- Outstanding Range ability
- One-second response to changes in flow rate
- CE, EEx, CENELEC (Pending)

Description

C-3400S Stack mass flow meter accommodates the change measurement requirements and instrument-validation demands of industrial gas flow monitoring installations.

The versatile microprocessor-based transmitter integrates the functions of flow-measurement, flow-range adjustment, meter validation and diagnostics, in either a probe-mounted or remote housing.

Mass flow rate and totalized flow, as well as other configuration variables, are displayed on the meter's optional 2×16 LCD panel. The programmable transmitter is easily configured via an RS-232 communication port and Smart Interface™ software, or via the display and magnetic switches on the instrument panel.

C-3400S allows you to configure or change the following password protected parameters ; flow range, totalize, alarm settings, time response, low flow cutoff and a calibration correction factor that compensates for flow profile flow variations.

Smart Interface™ software guides you through a procedure to fully validate instrument performance.

The meter is available with a variety of input power, output signal, mounting and packaging options.

The information contained herein is subject to change without notice.

C-3400 Series Smart-IN™ Stack Mass Flow Meter

Performance Specifications

Accuracy of Point Velocity
±2% of reading from 10 to 100% of calibrated range
±0.5% of full scale below 10% of calibrated range

Repeatability
±0.02% of full scale

Temperature Coefficient
±0.02% of reading per °F within ±50°F of customer specified conditions.
±0.03% of reading per °F within ±50°F to 100°F of customer specified conditions.
±0.04% of reading per °C within ±25°C of customer specified conditions.
±0.06% of reading per °C within ±25°C to 50°C of customer specified conditions.

Pressure Coefficient
0.02% per psi for air, consult factory for other gases.

Response Time
One second 63% of final velocity value.

Operating Specifications

Gases
Most gases compatible with 316L stainless steel

Gas Pressure(2 Limitations)
Compression fittings : 500 psig(34 barg)
1-inch 150lb flange(-40°F to 150°F) : 185 psig(12.8 barg)
Low pressure Hot Tap : 100 psig(7 barg)
High pressure Hot Tap : 1000 psig(70 barg)
Application gas pressure :
See mass flow range tables for maximum application gas pressure.

Pressure Drop
Neligible for pipes three inches in diameter or larger

Gas & Ambient Temperature
Gas.....15°F to 250°F(-10°C to 120°C)
Optional -40°F to 450°F(-40°C to 230°C)
Application dependant
Higher temperature available, consult factory
Ambient...-5°F to 120°F(-20°C to 50°C)

Leak Integrity
5×10^{-4}atm cc/sec of helium maximum

Power Requirements
DC 24V ±10% (regurated), 625mA maximum
220VAC ±10% (regurated), 15watts maximum

Output Signal
Linear 0~10 VDC, 1000ohms minimum load resistance or
Linear 4~20mA proportional mass flow rate.
700 ohms maximum resistance power supply dependent
User-selectable...Active non-galvanically seperated or
passive galvanically seperated(loop power required)

Alarms
Hard contact user-adjustable high and low
Dead band adjustable with Smart Interface™ software
Relay ratings-maximum 42 VDC or VAC, 140mA

Displays
Alphanumeric 2×16 digit backlight LCD
Adjustable variables via on-board switches (password protected) or with Smart Interface™ software
Adjustable variables---Full scale(50 to 100%)
Time Response(1 to 7 seconds)
Correction factor setting(0.5 to 5)
Zero and span
High and low alarm settings

Totalize
Seven digits(9,999,999.9)in engineering units
Reset table by software, on-board switches or external magnet

Software
Smart Interface™ Windows®-bases software minimum 8 MB of RAM, preferred 16 MB of RAM
RS-232 communication
Additional features---Alarm dead band adjustment
Zero cut-off adjustment
Linearization adjustment
Save/Load configurations
Flow meter validation

Physical Specifications

Wetted Materials
316L stainless steel

Enclosure
Hazadous-Area Location Enclosure(IP67) or NEMA 4X(IP65)
Both are powder-coated cast aluminum

Electrical Connections
Two 3/4 inch NPT ..... Hazardos-Area Location Enclosure(IP67)
One 1/2 inch NPT ..... NEMA 4X Enclosure(IP65)

Mounting (optional)
ANSI 1-inch 150 lb flange
3/4-inch tube compression fitting with 1-inch male NPT.
Hot tap systems

Certifications*
CE (All enclosures)
CSA (Explosion-proof for Class 1, Division 1, Groups B,C,D)
EEx (EEx d IIC T6 · · · T2)
FM (Explosion-proof for Class 1, Division 1, Groups B,C,D)

Mass Flow Ranges

EEx approved meters maximum velocities and flow rate are 50% of standard values shown in charts.

C-3400S - Air - Gas Code 0 Application Temp. = 50-250°F

Spec (%rdg)	Pipe Size	Area (SqFt)	Max Vel (SFPM)	Max (SCFM)	Max nm³/hr	Max PSIG
standard accuracy	1"	0.0060	20,000	120	189	120
standard accuracy	1~1/2"	0.0142	20,000	264	448	120
standard accuracy	2"	0.0233	20,000	466	735	120
standard accuracy	3"	0.0513	20,000	1026	1618	120
standard accuracy	4"	0.0884	20,000	1768	2788	120
standard accuracy	6"	0.2010	20,000	4020	6340	120
standard accuracy	8"	0.3470	20,000	6940	10945	120
standard accuracy	10"	0.5480	20,000	10960	17285	120
standard accuracy	12"	0.7770	20,000	15540	24508	120
standard accuracy	14"	0.9390	20,000	18780	29618	120
standard accuracy	16"	1.2270	20,000	24540	38703	120
standard accuracy	18"	1.5530	20,000	31060	48985	120
standard accuracy	24"	2.7920	20,000	55840	88066	120
standard accuracy	36"	6.4920	20,000	129840	204773	120

C-3400S - Argon-Gas Code 1 Application Temp. = 15-250°F

Spec (%rdg)	Pipe Size	Area (SqFt)	Max Vel (SFPM)	Max (SCFM)	Max nm³/hr	Max PSIG
standard accuracy	1"	0.0060	28,000	168	265	120
standard accuracy	1~1/2"	0.0142	28,000	398	627	120
standard accuracy	2"	0.0233	28,000	652	1029	120
standard accuracy	3"	0.0513	28,000	1436	2265	120
standard accuracy	4"	0.0884	28,000	2475	3904	120
standard accuracy	6"	0.2010	28,000	5628	8876	120
standard accuracy	8"	0.3470	28,000	9716	15324	120
standard accuracy	10"	0.5480	28,000	15344	24199	120
standard accuracy	12"	0.7770	28,000	21756	34312	120
standard accuracy	14"	0.9390	28,000	26292	41486	120
standard accuracy	16"	1.2270	28,000	34356	54184	120
standard accuracy	18"	1.5530	28,000	43484	68579	120
standard accuracy	24"	2.7920	28,000	78176	123293	120
standard accuracy	36"	6.4920	28,000	181776	286683	120

C-3400S - CO_2-Gas Code 2 Application Temp. = 15-250°F

Spec (%rdg)	Pipe Size	Area (SqFt)	Max Vel (SFPM)	Max (SCFM)	Max nm³/hr	Max PSIG
standard accuracy	1"	0.0060	19,800	119	187	120
standard accuracy	1~1/2"	0.0142	19,800	281	443	120
standard accuracy	2"	0.0233	19,800	461	728	120
standard accuracy	3"	0.0513	19,800	1016	1602	120
standard accuracy	4"	0.0884	19,800	1750	2760	120
standard accuracy	6"	0.2010	19,800	3980	6277	120
standard accuracy	8"	0.3470	19,800	6871	10836	120
standard accuracy	10"	0.5480	19,800	10650	17112	120
standard accuracy	12"	0.7770	19,800	15385	24263	120
standard accuracy	14"	0.9390	19,800	18592	29322	120
standard accuracy	16"	1.2270	19,800	24295	38316	120
standard accuracy	18"	1.5530	19,800	30749	48495	120
standard accuracy	24"	2.7920	19,800	55282	87186	120
standard accuracy	36"	6.4920	19,800	128542	202726	120

C-3400S - Chlorine-Gas Code 3 Application Temp. = 50-90°F

Spec (%rdg)	Pipe Size	Area (SqFt)	Max Vel (SFPM)	Max (SCFM)	Max nm³/hr	Max PSIG
5% correlation	1"	0.0060	3,261	1.5	1	120
5% correlation	1~1/2"	0.0142	3,333	6.5	10	120
5% correlation	2"	0.0233	3,380	12.0	19	120
5% correlation	3"	0.0513	3,333	20	32	120
5% correlation	4"	0.0884	3,169	45	71	120
5% correlation	6"	0.2010	3,219	75	118	120
5% correlation	8"	0.3470	3,411	175	276	120

C-3400S - Digester - Gas Code 4 Application Temp. = 15-250°F

Spec (%rdg)	Pipe Size	Area (SqFt)	Max Vel (SFPM)	Max (SCFM)	Max nm³/hr	Max PSIG
standard accuracy	1"	0.0060	17,200	103	163	30
standard accuracy	1~1/2"	0.0142	17,200	244	385	30
standard accuracy	2"	0.0233	17,200	401	632	30
standard accuracy	3"	0.0513	17,200	882	1392	30
standard accuracy	4"	0.0884	17,200	1520	2398	30
standard accuracy	6"	0.2010	17,200	3457	5452	30
standard accuracy	8"	0.3470	17,200	5968	9413	30
standard accuracy	10"	0.5480	17,200	9426	14865	30
standard accuracy	12"	0.7770	17,200	13364	21077	30
standard accuracy	14"	0.9390	17,200	16151	25472	30
standard accuracy	16"	1.2270	17,200	21104	33284	30
standard accuracy	18"	1.5530	17,200	26712	42127	30
standard accuracy	24"	2.7920	17,200	48022	75737	30
standard accuracy	36"	6.4920	17,200	111662	176105	30

C-3400S - Digester-Gas Code 5 Application Temp. = 15-250°F

Spec (%rdg)	Pipe Size	Area (SqFt)	Max Vel (SFPM)	Max (SCFM)	Max nm³/hr	Max PSIG
4% correlation	1"	0.0060	17,200	103	163	120
4% correlation	1~1/2"	0.0142	17,200	244	385	120
4% correlation	2"	0.0233	17,200	401	632	120
4% correlation	3"	0.0513	17,200	882	1392	120
4% correlation	4"	0.0884	17,200	1520	2398	120
4% correlation	6"	0.2010	17,200	3457	5452	120
4% correlation	8"	0.3470	17,200	5968	9413	120
4% correlation	10"	0.5480	17,200	9426	14865	120
4% correlation	12"	0.7770	17,200	13364	21077	120
4% correlation	14"	0.9390	17,200	16151	25472	120
4% correlation	16"	1.2270	17,200	21104	33284	120
4% correlation	18"	1.5530	17,200	26712	42127	120
4% correlation	24"	2.7920	17,200	48022	75737	120
4% correlation	36"	6.4920	17,200	111662	176105	120

C-3400S - Helium - Gas Code 6 Application Temp. = 15-250°F

Spec (%rdg)	Pipe Size	Area (SqFt)	Max Vel (SFPM)	Max (SCFM)	Max nm³/hr	Max PSIG
standard accuracy	1"	0.0060	12,400	74	117	120
standard accuracy	1~1/2"	0.0142	12,400	176	287	120
standard accuracy	2"	0.0233	12,400	289	456	120
standard accuracy	3"	0.0513	12,400	636	1003	120
standard accuracy	4"	0.0884	12,400	1096	1729	120
standard accuracy	6"	0.2010	12,400	2492	3931	120
standard accuracy	8"	0.3470	12,400	4303	6786	120
standard accuracy	10"	0.5480	12,400	6795	10717	120
standard accuracy	12"	0.7770	12,400	9635	15195	120
standard accuracy	14"	0.9390	12,400	11644	18363	120
standard accuracy	16"	1.2270	12,400	15215	23996	120
standard accuracy	18"	1.5530	12,400	19257	30371	120
standard accuracy	24"	2.7920	12,400	34621	54601	120
standard accuracy	36"	6.4920	12,400	80501	126959	120

Mass Flow Ranges

EEx approved meters maximum velocities and flow rate are 50% of standard values shown in charts.

C-3400S - Hydrogen - Gas Code 7 Application Temp. = 50-90℉

Spec (%rdg)	Pipe Size	Area (SqFt)	Max Vel (SFPM)	Max (SCFM)	Max nm³/hr	Max PSIG
standard accuracy	1"	0.0060	9,600	58	91	135
standard accuracy	1~1/2"	0.0142	7,042	100	158	135
standard accuracy	2"	0.0233	4,290	100	158	135
standard accuracy	3"	0.0513	1,950	100	158	135
standard accuracy	4"	0.0884	1,130	100	158	135
standard accuracy	6"	0.2010	500	100	158	135
standard accuracy	8"	0.3470	290	100	158	135
See chart below for flows greater than 100 SCFM						
standard accuracy	1~1/2"	0.0142	9,600	136	215	85
standard accuracy	2"	0.0233	9,600	224	354	85
standard accuracy	3"	0.0513	4,873	250	395	85
standard accuracy	4"	0.0884	2,828	250	395	85
standard accuracy	6"	0.2010	1,243	250	395	85
standard accuracy	8"	0.3470	720	250	395	85
See chart below for flows greater than 250 SCFM						
standard accuracy	3"	0.0513	7,797	400	630	ambinet
standard accuracy	4"	0.0884	4,525	400	630	ambinet
standard accuracy	6"	0.2010	1,990	400	630	ambinet
standard accuracy	8"	0.3470	1,153	400	630	ambinet

C-3400S - CH_4-Gas Code 8 Application Temp. = 15-250℉

Spec (%rdg)	Pipe Size	Area (SqFt)	Max Vel (SFPM)	Max (SCFM)	Max nm³/hr	Max PSIG
standard accuracy	1"	0.0060	16,000	96	151	30
standard accuracy	1~1/2"	0.0142	16,000	227	358	30
standard accuracy	2"	0.0233	16,000	373	588	30
standard accuracy	3"	0.0513	16,000	821	1295	30
standard accuracy	4"	0.0884	16,000	1414	2231	30
standard accuracy	6"	0.2010	16,000	3216	5072	30
standard accuracy	8"	0.3470	16,000	5552	8756	30
standard accuracy	10"	0.5480	16,000	8768	13828	30
standard accuracy	12"	0.7770	16,000	12432	19607	30
standard accuracy	14"	0.9390	16,000	15024	23695	30
standard accuracy	16"	1.2270	16,000	19632	30962	30
standard accuracy	18"	1.5530	16,000	24848	39188	30
standard accuracy	24"	2.7920	16,000	44672	70453	30
standard accuracy	36"	6.4920	16,000	102872	163819	30

C-3400S - CH_4 -Gas Code 9 Application Temp. = 15-250℉

Spec (%rdg)	Pipe Size	Area (SqFt)	Max Vel (SFPM)	Max (SCFM)	Max nm³/hr	Max PSIG
4% correlation	1"	0.0060	16,000	96	151	120
4% correlation	1~1/2"	0.0142	16,000	227	358	120
4% correlation	2"	0.0233	16,000	373	588	120
4% correlation	3"	0.0513	16,000	821	1295	120
4% correlation	4"	0.0884	16,000	1414	2231	120
4% correlation	6"	0.2010	16,000	3216	5072	120
4% correlation	8"	0.3470	16,000	5552	8756	120
4% correlation	10"	0.5480	16,000	8768	13828	120
4% correlation	12"	0.7770	16,000	12432	19607	120
4% correlation	14"	0.9390	16,000	15024	23695	120
4% correlation	16"	1.2270	16,000	19632	30962	120
4% correlation	18"	1.5530	16,000	24848	39188	120
4% correlation	24"	2.7920	16,000	44672	70453	120
4% correlation	36"	6.4920	16,000	102872	163819	120

C-3400S - Nitrogen - Gas Code 10 Application Temp. = 15-250℉

Spec (%rdg)	Pipe Size	Area (SqFt)	Max Vel (SFPM)	Max (SCFM)	Max nm³/hr	Max PSIG
standard accuracy	1"	0.0060	19,800	119	187	120
standard accuracy	1~1/2"	0.0142	19,800	281	443	120
standard accuracy	2"	0.0233	19,800	461	728	120
standard accuracy	3"	0.0513	19,800	1016	1602	120
standard accuracy	4"	0.0884	19,800	1750	2760	120
standard accuracy	6"	0.2010	19,800	3980	6277	120
standard accuracy	8"	0.3470	19,800	6871	10836	120
standard accuracy	10"	0.5480	19,800	10650	17112	120
standard accuracy	12"	0.7770	19,800	15385	24263	120
standard accuracy	14"	0.9390	19,800	18592	29322	120
standard accuracy	16"	1.2270	19,800	24295	38316	120
standard accuracy	18"	1.5530	19,800	30749	48495	120
standard accuracy	24"	2.7920	19,800	55282	87186	120
standard accuracy	36"	6.4920	19,800	128542	202726	120

C-3400S - Oxygen-Gas Code 11 Application Temp. = 15-250℉

Spec (%rdg)	Pipe Size	Area (SqFt)	Max Vel (SFPM)	Max (SCFM)	Max nm³/hr	Max PSIG
4% correlation	1"	0.0060	19,800	119	187	120
4% correlation	1~1/2"	0.0142	19,800	281	443	120
4% correlation	2"	0.0233	19,800	461	728	120
4% correlation	3"	0.0513	19,800	1016	1602	120
4% correlation	4"	0.0884	19,800	1750	2760	120
4% correlation	6"	0.2010	19,800	3980	6277	120
4% correlation	8"	0.3470	19,800	6871	10836	120
4% correlation	10"	0.5480	19,800	10650	17112	120
4% correlation	12"	0.7770	19,800	15385	24263	120
4% correlation	14"	0.9390	19,800	18592	29322	120
4% correlation	16"	1.2270	19,800	24295	38316	120
4% correlation	18"	1.5530	19,800	30749	48495	120
4% correlation	24"	2.7920	19,800	55282	87186	120
4% correlation	36"	6.4920	19,800	128542	202726	120

C-3400S - Propane-Gas Code 12 Application Temp = 15-250℉

Spec (%rdg)	Pipe Size	Area (SqFt)	Max Vel (SFPM)	Max (SCFM)	Max nm³/hr	Max PSIG
standard accuracy	1"	0.0060	13,200	79	125	30
standard accuracy	1~1/2"	0.0142	13,200	187	296	30
standard accuracy	2"	0.0233	13,200	308	485	30
standard accuracy	3"	0.0513	13,200	677	1068	30
standard accuracy	4"	0.0884	13,200	1167	1840	30
standard accuracy	6"	0.2010	13,200	2653	4184	30
standard accuracy	8"	0.3470	13,200	4580	7224	30
standard accuracy	10"	0.5480	13,200	7234	11408	30
standard accuracy	12"	0.7770	13,200	10256	16176	30
standard accuracy	14"	0.9390	13,200	12395	19548	30
standard accuracy	16"	1.2270	13,200	16196	25544	30
standard accuracy	18"	1.5530	13,200	20500	32330	30
standard accuracy	24"	2.7920	13,200	36854	58124	30
standard accuracy	36"	6.4920	13,200	85694	135150	30

C-3400S - Propane-Gas Code 13 Application Temp. = 15-250℉

Spec (%rdg)	Pipe Size	Area (SqFt)	Max Vel (SFPM)	Max (SCFM)	Max nm³/hr	Max PSIG
4% correlation	1"	0.0060	13,200	79	125	120
4% correlation	1~1/2"	0.0142	13,200	187	296	120
4% correlation	2"	0.0233	13,200	308	485	120
4% correlation	3"	0.0513	13,200	677	1068	120
4% correlation	4"	0.0884	13,200	1167	1840	120
4% correlation	6"	0.2010	13,200	2653	4184	120
4% correlation	8"	0.3470	13,200	4580	7224	120
4% correlation	10"	0.5480	13,200	7234	11408	120
4% correlation	12"	0.7770	13,200	10256	16176	120
4% correlation	14"	0.9390	13,200	12395	19548	120
4% correlation	16"	1.2270	13,200	16196	25544	120
4% correlation	18"	1.5530	13,200	20500	32330	120
4% correlation	24"	2.7920	13,200	36854	58124	120
4% correlation	36"	6.4920	13,200	85694	135150	120

Dimensional Specifications

Compression Fitting – Front View(E2)

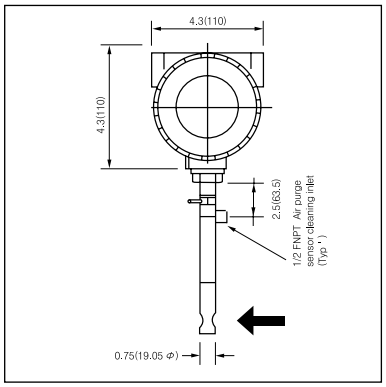

Compression Fitting – Side View (E2)

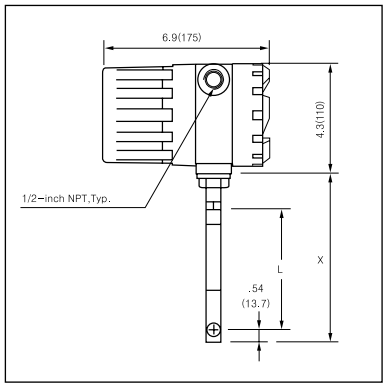

Flange Mounting – Front View (E2)

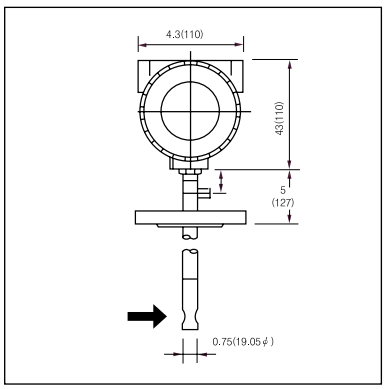

Flange Mounting – Side View (E2)

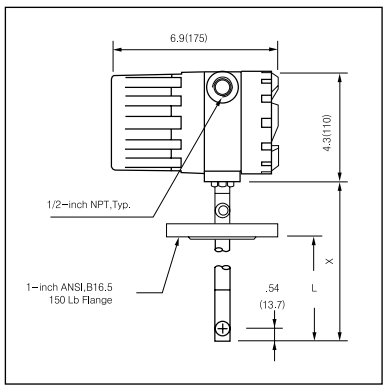

Remote Mount Junction Box – Front View (E4)

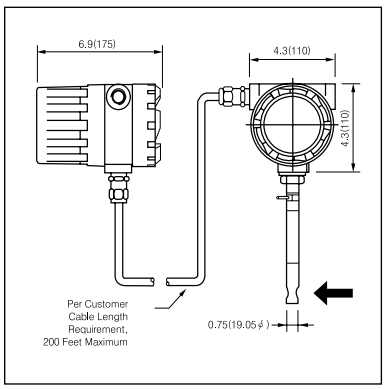

Remote Mount Junction Box – Side View (E4)

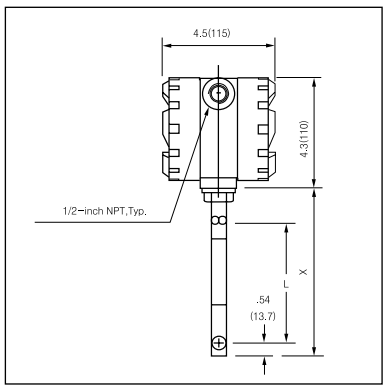

Remote Mount – Front View (E3, EEx only)

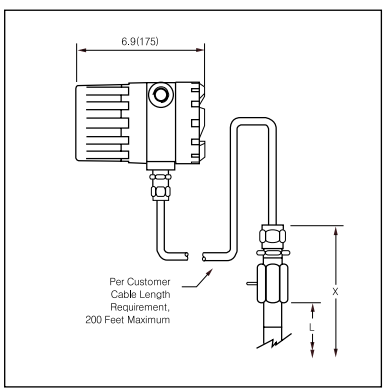

Remote Mount – Side View (E3, EEx only)

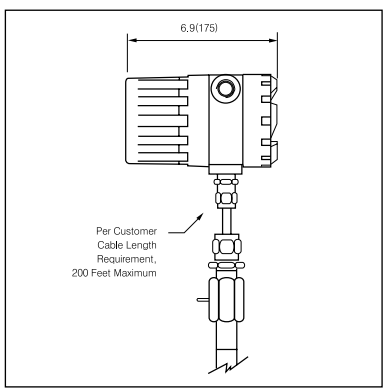

Mounting Holes for Remote Bracket

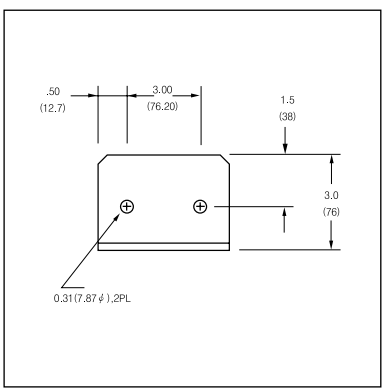

All dimensions are inches, Millimeters are in parentheses, Certified drawings are availaable in request.

Tables

Length Chart		
Code	L	X
L06	6,0 (152,4)	7,0 (177,8)
LO9	9,0 (228,6)	10,0 (254,0)
L13	13,0 (330,2)	14,0 (355,6)
L18	18,0 (457,2)	19,0 (482,6)
L24	24,0 (609,6)	25,0 (635,0)
L36	36,0 (914,4)	37,0 (939,8)

Length Chart		
Code	L	X
L06	6,0 (152,4)	11,54 (293,1)
LO9	9,0 (228,6)	14,54 (369,3)
L13	13,0 (330,2)	18,54 (470,9)
L18	18,0 (457,2)	23,54 (597,9)
L24	24,0 (609,6)	29,54 (750,3)
L36	36,0 (914,4)	41,54 (1055,1)

Length Chart		
Code	L	X
L06	6,0 (152,4)	13,04 (331,2)
LO9	9,0 (228,6)	16,04 (407,4)
L13	13,0 (330,2)	20,04 (509,0)
L18	18,0 (457,2)	25,04 (636,0)
L24	24,0 (609,6)	31,04 (788,4)
L36	36,0 (914,4)	43,04 (1093,2)

Dimensional Specifications (I)

Remote Rear Bracket Mounted Electronics

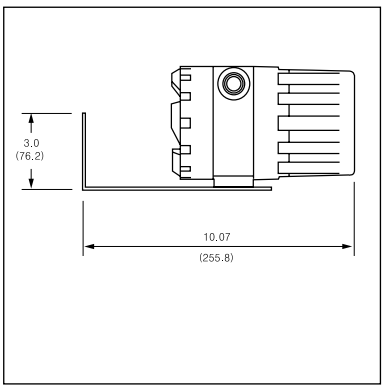

Remote Side Bracket Mounted Electronics

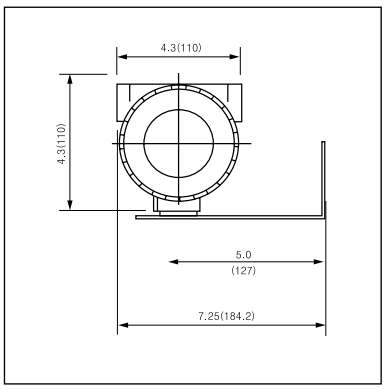

Tables

Length Chart		
Code	L	X
L06	6.1 (154.9)	12.64 (321.0)
LO9	9.1 (231.1)	15.64 (397.2)
L13	13.1 (322.7)	19.64 (498.8)
L18	18.1 (459.7)	24.64 (625.8)
L24	24.1 (612.1)	30.64 (778.2)
L36	36.1 (916.9)	42.64 (1083.0)

NEMA 4X Dimensional Specifications

Compression Fitting – Front View (EN2)

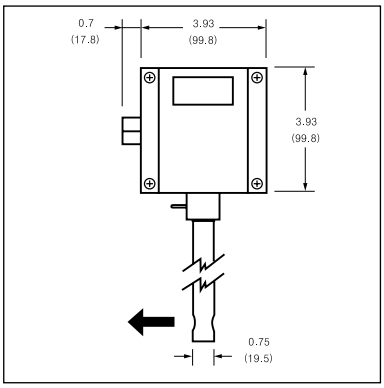

Compression Fitting – Side View (EN2)

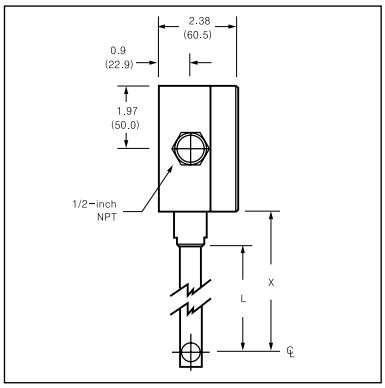

Remote Mount Junction Box – Front View (EN4)

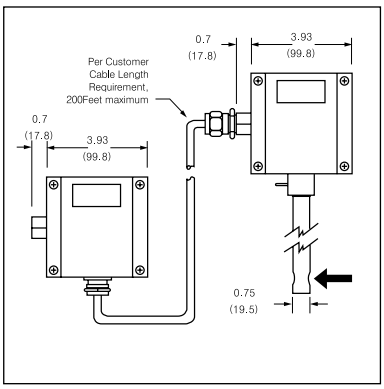

Remote Mount Junction Box – Side View (EN4)

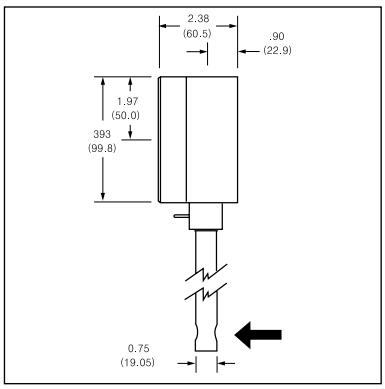

Tables

Length Chart		
Code	L	X
L06	6.0 (152.4)	13.6 (345.4)
LO9	9.0 (228.6)	16.6 (421.6)
L13	13.0 (330.2)	20.6 (523.2)
L18	18.0 (457.2)	25.6 (650.2)
L24	24.0 (609.6)	31.6 (802.6)
L36	36.0 (914.4)	43.6 (1107.4)

All dimensions are inches, Millimeters are in parentheses. Alldrawings have a ±0.25 inch(6.4mm) tolerance.
Certified drawings are availaable in request.

Low Pressure Hot Tap Dimensional Specification

Side View

VARIABLES

L=Norminal Probe Length
D=Duct O.D.
C=Duct I.d.
T=Height of "threadolet"

or Customer Provided Weldolet

R=Restraint Cable Length

FORMULA

L≥12+D/2+T

So L must be equal or greater than 12-inches plus the height of the "threadolet" plus half the duct O.D.

R=D/2+T+8.8

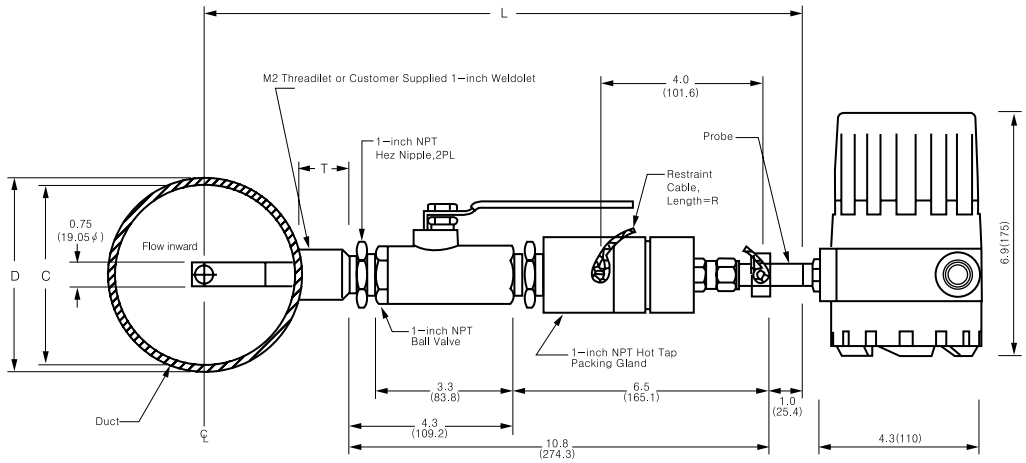

All dimensions are inches. Millimeters are in parentheses.
All drawings have a ±0.25 inch(6.4mm) tolerance, Certifide drawings are available on request.

Up & Downstream Requirements

Select an installation site that will minimize possible distortion in the flow profile Valves, elbows, control valves and other piping components may cause flow distrubances. Check your specific piping condition against the examples shown below. In order to achieve accurate and repeatable performance install the flow meter using the recommended number of straight run pipe diameters upstream and downstream of the sensor.

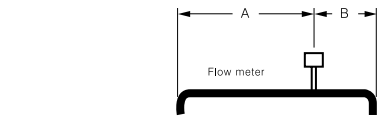

Example 1.
One 90° elbow before meter

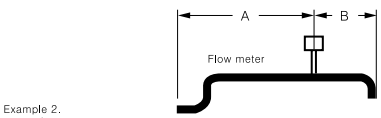

Example 2.
Two 90° elbow before meter in one plane

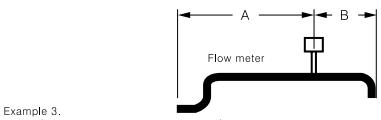

Example 3.
Two 90° elbow before meter out of plane(if three 90° bends present, double recommended length)

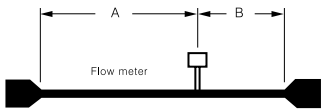

Example 4.
Reduction before meter

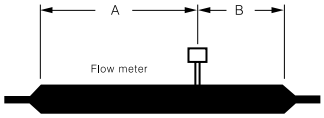

Example 5.
Expantion before meter

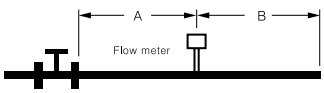

Example 6.
Regulator or valve partially closed before meter(if valve is always wide open, base lenght requirements on fitting directly precending it)

Example	A-Upstream(1)Requirements	B-Downstream(2)Requirements
1	15D	5D
2	20D	5D
3	40D	10D
4	15D	5D
5	30D	10D
6	40D	5D

(1) Number of diameter(D)of straight pipe required between upstream disturbance and the flow meter.
(2) Number of diameter(D)of straght pipe required downstream of the flow meter