MICRO BORING BAR

BCA

MAS - 403 BT



FIG. 1

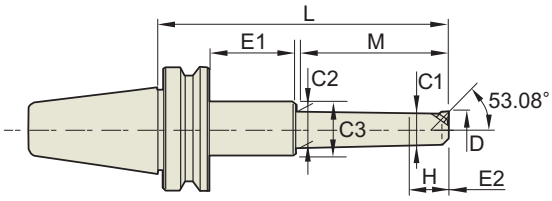

FIG. 2

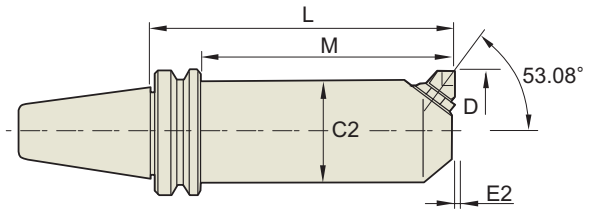

MAS - BT 403	Taper Accuracy	G Value	RPM	Coolant System
	AT3			

TAPER No.	CODE No.	FIG.	D		L	M	C1	C2	C3	H	E1	E2	UNIT	INSERT	중량 (KG)	재고
			Min	Max												
30	BT30-BCA13.5-105	1	13.5	16	105	68	12	13.0	44	15	5	0.2	M1B2 E/F	BRAZED TYPE		
	BT30-BCA14.5-105	1	14.5	17	105	68	13	14.0	44	15	5	0.2	M1B2 E/F	BRAZED TYPE		
	BT30-BCA16-105	3	16	22.5	105	73	14	15	–	18	–	0.2	M1A2 E/F	BRAZED TYPE		
	BT30-BCA19-120	1	19	23	120	85	16	18	44	23	3	0.2	M2B 2XC	CCGT0401	0.70	
	BT30-BCA23-135	3	23	29	135	105	19	22	–	24	–	0.2	M3B 2XT	TBGT0601	0.70	
	BT30-BCA29-150	1	29	41	150	115	25	28	44	30	8	0.2	M3A 2XT	TBGT0601	0.90	
	BT30-BCA29-195	1	29	41	195	115	25	28	44	30	53	0.2	M3A 2XT	TBGT0601		
	BT30-BCA38-150	1	38	49	150	115	33	35	55	41	8	0.2	M5B 2XT	TCMT1102	1.40	
	BT30-BCA38-210	1	38	49	210	175	33	37	55	41	8	0.2	M5B 2XT	TCMT1102		
	BT30-BCA46-150	1	46	66	150	115	38	41	55	45	8	0.2	M5A 2XT	TCMT1102	2.10	
	BT30-BCA46-210	1	46	66	210	175	38	45	55	45	8	0.2	M5A 2XT	TCMT1102		
	BT30-BCA62-165	2	62	87	165	135	51	–	–	–	–	0.2	M7A 2XT	TCMT16T3		
40	BT40-BCA13.5-105	1	13.5	16	105	68	12	13.0	44	15	5	0.2	M1B2 E/F	BRAZED TYPE		
	BT40-BCA14.5-105	1	14.5	17	105	68	13	14.0	44	15	5	0.2	M1B2 E/F	BRAZED TYPE		
	BT40-BCA16-105	3	16	22.5	105	73	14	15	–	18	–	0.2	M1A2 E/F	BRAZED TYPE		
	BT40-BCA19-120	1	19	23	120	85	16	18	44	23	3	0.2	M2B2XC	CCGT0401	1.50	
	BT40-BCA23-135	3	23	29	135	105	19	22	–	24	–	0.2	M3B2XT	TBGT0601	1.50	
	BT40-BCA29-150	1	29	41	150	115	25	28	44	30	8	0.2	M3A2XT	TBGT0601	1.50	
	BT40-BCA29-195	1	29	41	195	115	25	28	44	30	53	0.2	M3A2XT	TBGT0601	2.00	
	BT40-BCA38-150	1	38	49	150	115	33	35	55	41	8	0.2	M5B2XT	TCMT1102	1.80	
	BT40-BCA38-210	1	38	49	210	175	33	37	55	41	8	0.2	M5B2XT	TCMT1102	2.20	
	BT40-BCA46-150	1	46	66	150	115	38	41	55	45	8	0.2	M5A2XT	TCMT1102	2.10	
	BT40-BCA46-210	1	46	66	210	175	38	45	55	45	8	0.2	M5A2XT	TCMT1102	2.30	
	BT40-BCA62-165	2	62	87	165	135	51	–	–	–	–	0.2	M7A2XT	TCMT16T3	2.90	
	BT40-BCA62-210	2	62	87	210	180	51	–	–	–	–	0.2	M7A2XT	TCMT16T3	3.60	
	BT40-BCA83-150	2	83	108	150	120	63	–	–	–	–	0.2	M7A2XT	TCMT16T3		
	BT40-BCA83-210	2	83	108	210	180	63	–	–	–	–	0.2	M7A2XT	TCMT16T3		
	BT40-BCA98-150	4	98	142	150	120	83	–	–	85	–	0.2	M10A2XT	TCMT16T3		

MICRO BORING BAR

MAS - 403 BT

FIG. 3

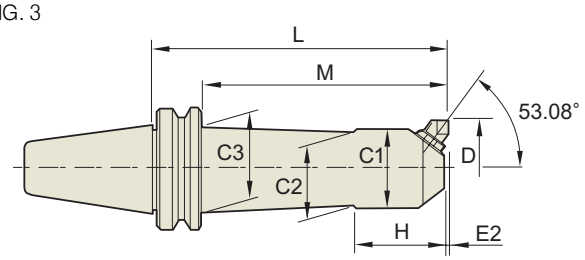

FIG. 4

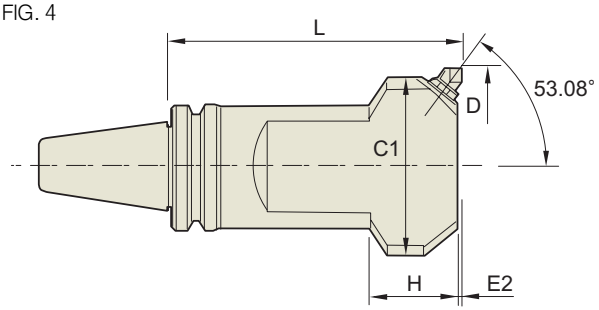

MAS - BT 403	Taper Accuracy	G Value	RPM	Coolant System
	AT3			

TAPER No.	CODE No.	FIG.	D		L	M	C1	C2	C3	H	E1	E2	UNIT	INSERT	중량 (KG)	재고
			Min	Max												
	BT50-BCA13.5-120	1	13.5	16	120	67	12	13	44	15	10	0.2	M1B2 E/F	–		
	BT50-BCA13.5-195	1	13.5	16	195	67	12	13	44	15	85	0.2	M1B2 E/F	–		
	BT50-BCA14.5-120	1	14.5	17	120	67	13	14	44	15	10	0.2	M1B2 E/F	–		
	BT50-BCA14.5-195	1	14.5	17	195	67	13	14	44	15	85	0.2	M1B2 E/F	–		
	BT50-BCA16-120	1	16	22.5	120	73	14	15	44	18	4	0.2	M1A2 E/F	–		
	BT50-BCA16-195	1	16	22.5	195	73	14	15	44	18	79	0.2	M1A2 E/F	–		
	BT50-BCA19-135	1	19	23	135	86	16	18	44	23	6	0.2	M2B2XC	CCGT0401	3.80	
	BT50-BCA19-210	1	19	23	210	86	16	18	44	23	81	0.2	M2B2XC	CCGT0401		
	BT50-BCA23-150	1	23	29	150	105	19	22	44	24	2	0.2	M3B2XT	TBGT0601	3.90	
	BT50-BCA23-225	1	23	29	225	105	19	22	44	24	77	0.2	M3B2XT	TBGT0601		
	BT50-BCA29-165	1	29	41	165	115	25	28	44	30	7	0.2	M3A2XT	TBGT0601	4.50	
	BT50-BCA29-225	1	29	41	225	115	25	28	44	30	67	0.2	M3A2XT	TBGT0601		
	BT50-BCA38-165	1	38	49	165	115	33	35	55	41	7	0.2	M5B2XT	TCMT1102		
	BT50-BCA38-225	1	38	49	225	172	33	37	55	41	10	0.2	M5B2XT	TCMT1102	5.00	
	BT50-BCA46-165	1	46	66	165	115	38	41	55	45	7	0.2	M5A2XT	TCMT1102	5.20	
50	BT50-BCA46-225	3	46	66	225	182	38	–	–	45	–	0.2	M5A2XT	TCMT1102		
	BT50-BCA46-255	1	46	66	255	206	38	–	55	45	6	0.2	M5A2XT	TCMT1102	5.70	
	BT50-BCA62-180	2	62	87	180	137	51	–	–	–	–	0.2	M7A2XT	TCMT16T3	7.00	
	BT50-BCA62-240	1	62	87	240	184	51	57	70	60	13	0.2	M7A2XT	TCMT16T3	7.60	
	BT50-BCA62-330	1	62	87	330	280	51	60	70	60	7	0.2	M7A2XT	TCMT16T3	9.50	
	BT50-BCA83-165	2	83	108	165	122	63	–	–	–	–	0.2	M7A2XT	TCMT16T3		
	BT50-BCA83-240	1	83	108	240	190	63	62	90	95	7	0.2	M7A2XT	TCMT16T3		
	BT50-BCA83-345	1	83	108	345	295	63	62	90	95	7	0.2	M7A2XT	TCMT16T3		
	BT50-BCA98-165	2	98	142	165	122	83	–	–	–	–	0.2	M10A2XT	TCMT16T3		
	BT50-BCA98-240	2	98	142	240	197	83	–	–	–	–	0.2	M10A2XT	TCMT16T3		
	BT50-BCA98-345	3	98	142	345	302	83	92	–	85	–	0.2	M10A2XT	TCMT16T3		
	BT50-BCA132-210	4	132	176	210	–	108	–	–	65	–	0.2	M10A2XT	TCMT16T3		
	BT50-BCA132-315	4	132	176	315	–	108	–	–	65	–	0.2	M10A2XT	TCMT16T3		
	BT50-BCA166-225	4	166	210	225	–	142	–	–	70	–	0.2	M10A2XT	TCMT16T3		
	BT50-BCA166-315	4	166	210	315	–	142	–	–	70	–	0.2	M10A2XT	TCMT16T3		
	BT50-BCA200-210	4	200	244	210	–	176	–	–	75	–	0.2	M10A2XT	TCMT16T3		

MICRO BORING BAR

ST



FIG. 1

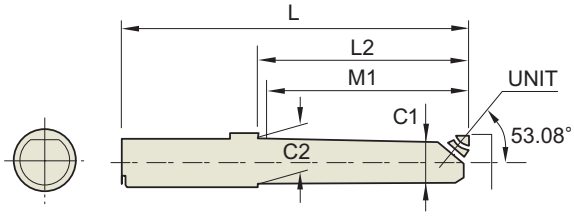

FIG. 2

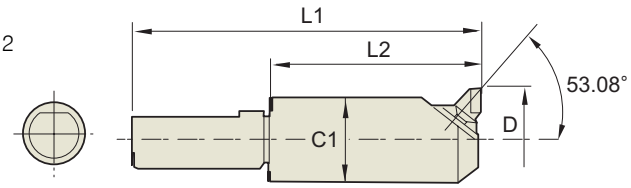

K	Taper Accuracy	G Value	RPM	Coolant System
	AT3			

STYLE	CODE No.	FIG.	D		L1	L2	M1	C1	C2	MICRO UNIT	중량 (KG)	재고
			Min	Max								
32	ST32-BCA13.5-75	1	13.5	16	135	75	67	12	13	M1B2E/F	0.5	
	ST32-BCA14.5-75	1	14.5	17	145	75	67	12	14	M1B2E/F	0.5	
	ST32-BCA16-90	1	16	22.5	160	90	82	14	15	M1A2E/F	0.5	
	ST32-BCA19-90	1	19	23.0	160	90	82	16	18	M2B-2XC	0.5	●
	ST32-BCA23-120	1	23	29.0	190	120	110	19	22	M3B-2XT	1	●
	ST32-BCA29-120	1	29	41.0	190	120	110	25	28	M3A-2XT	1	●
	ST32-BCA38-120	2	38	49.0	190	120	115	33	35	M5B-2XT	1.5	●
	ST32-BCA46-120	2	46	66	190	120	115	38	–	M5A-2XT	1.5	●
	ST32-BCA62-120	2	62	87.0	190	120	115	51	–	M7A-2XT	2.5	
42	ST42-BCA13.5-85	1	13.5	16	165	85	67	12	13	M1B2E or F	1.0	
	ST42-BCA14.5-85	1	14.5	17	165	85	67	12	14	M1B2E or F	1.0	
	ST42-BCA16-100	1	16	22.5	180	100	82	14	15	M1A2E or F	1.0	
	ST42-BCA19-100	1	19	23.0	180	100	82	16	18	M2B2E or F	1.0	
	ST42-BCA23-120	1	23	29.0	200	120	110	19	22	M3B-2XT	1.5	●
	ST42-BCA29-120	1	29	41.0	200	120	110	25	28	M3A-2XT	1.5	●
	ST42-BCA38-130	1	38	49.0	210	130	125	33	35	M5B-2XT	1.5	●
	ST42-BCA46-135	1	46	66.0	215	135	130	38	44	M5A-2XT	1.5	●
	ST42-BCA62-135	2	62	87.0	215	135	130	51	–	M7A-2XT	2.5	●
	ST42-BCA83-150	2	83	108	230	150	145	63	–	M7A-2XT	3.0	●

LARGE SIZE MICRO CUT BORING BAR(BRA) - MAS 403 BT

■ BORING RING HOLDER

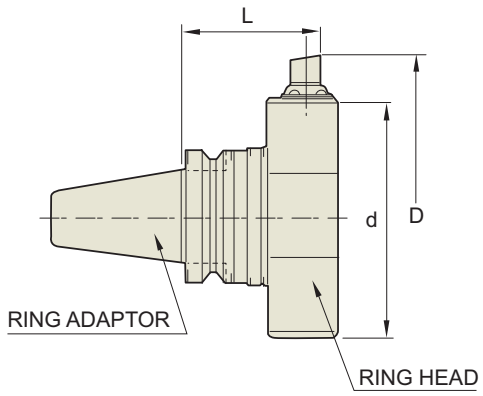

CODE No.	d	D	L
BT50-BRA140-105	140	197	105
BT50-BRA140-165	140	197	165
BT50-BRA191-105	191	248	105
BT50-BRA191-165	191	248	165
BT50-BRA242-105	242	299	105
BT50-BRA242-165	242	299	165
BT50-BRA293-105	293	350	105
BT50-BRA293-165	293	350	165
BT50-BRA344-105	344	401	105
BT50-BRA344-165	344	401	165
BT50-BRA395-105	395	452	105
BT50-BRA395-165	395	452	165

■ RING ADAPTER

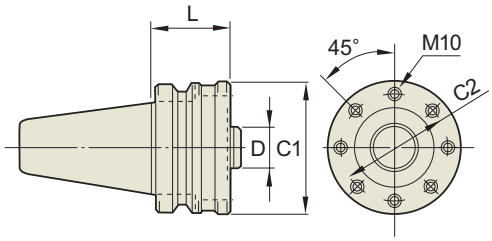

CODE No.	D(h6)	L	C1	C2
BT50-RAA32- 60	32	60	102	82
BT50-RAA32-120	32	120	102	82

■ RING HEAD

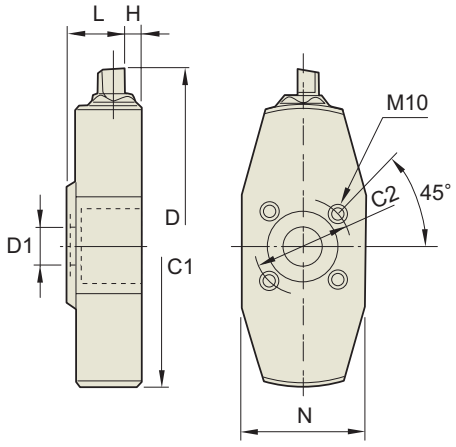

CODE No.	D1 (H7)	D		L	C1	C2	H	N	MICRO UNIT
		MIN	MAX						
RH32-BCA140	32	140	197	45	102	82	14	–	M10A2XT
RH32-BCA191	32	191	248	45	136	82	14	–	M10A2XT
RH32-BCA242	32	242	299	45	184	82	14	103	M10A2XT
RH32-BCA293	32	293	350	45	234	82	14	103	M10A2XT
RH32-BCA344	32	344	401	45	284	82	14	103	M10A2XT
RH32-BCA395	32	395	452	45	36	82	14	103	M10A2XT

BORING BAR의 강성 및 MICRO UNIT 비교표



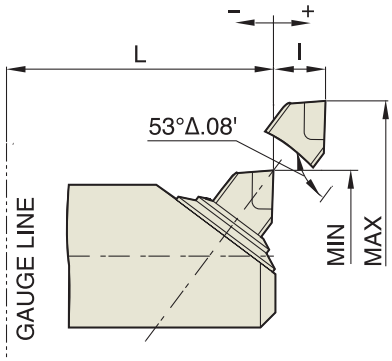

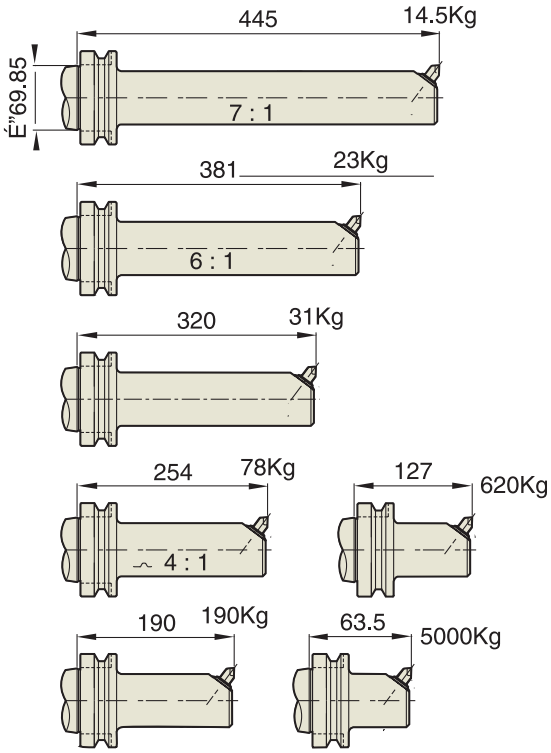

BORING BAR CODE No.	BRAZED TYPE B EF		SCREW ON TYPE			사용INSERT 규격
	MIN	MAX	MIN	MAX	⊿L	
BCA 19	M2B2	M2B2				CCGT0401
	19	23			-1.9	CCGT0401
BCA 23	M3B2	M3B2	M3B2XT	M3B2XT	M3B2XT	TBGT 060102
	23	29	24.9	30.9	-1.9	TBGT 060102
BCA 29	M3A2	M3A2	M3A2XT	M3A2XT	M3A2XT	TBGT 060102
	29	41.8	30.9	43.8	-1.9	TBGT 060102
BCA 38	M5B2	M5B2	M5B2XT	M5B2XT	M5B2XT	TCMT 110204
	38	49.2	40.9	52.1	-1.9	TCMT 110204
BCA 46	M5A2	M5A2	M5A2XT	M5A2XT	M5A2XT	TCMT 110204
	46	66.6	48.9	69.5	-1.9	TCMT 110204
BCA 62	M7A2	M7A2	M7A2XT	M7A2XT	M7A2XT	TCMT 16T304
	62	87.4	62	87.4	0	TCMT 16T304
BCA 83	M7A2	M7A2	M7A2XT	M7A2XT	M7A2XT	TCMT 16T304
	83	108.4	83	108.4	0	TCMT 16T304
BCA 98	M10A2	M10A2	M10A2XT	M10A2XT	M10A2XT	TCMT 16T304
	98	142.4	98	142.4	0	TCMT 16T304
BCA 132	M10A2	M10A2	M10A2XT	M10A2XT	M10A2XT	TCMT 16T304
	132	176.4	132	176.4	0	TCMT 16T304
BCA 166	M10A2	M10A2	M10A2XT	M10A2XT	M10A2XT	TCMT 16T304
	166	210.4	166	210.4	0	TCMT 16T304
BCA 200	M10A2	M10A2	M10A2XT	M10A2XT	M10A2XT	TCMT 16T304
	200	244.4	200	244.4	0	TCMT 16T304

MICRO UNIT SPARE PART

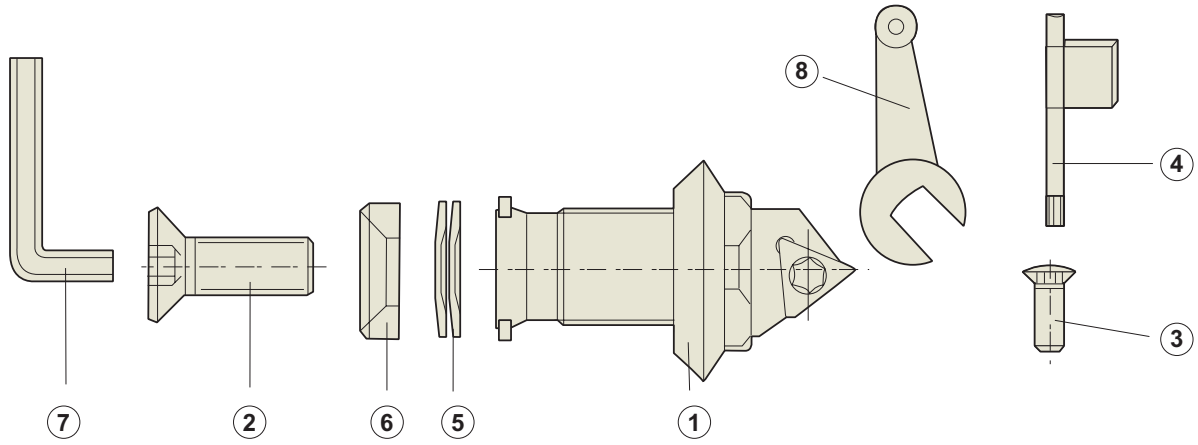

PART NAME / ORDER No.			M1A-B	M2A-B	M3A-B	M5A-B	M5A-B	M7A-B	M10A-B
1	DIAL NUT	경사취부형	1-40	2-40	3-40	5-40	5-40	7-80	10-80
	DIAL NUT	직각취부형	1-50	2-50	3-50	5-50	5-50	7-100	10-100
2	CARTRIDGE BOLT	M-A	F-M3-0.5-8	F-M3-0.5-12	F-M4-0.7-15	F-M6-1.0-25	F-M6-1.0-25	F-M10-1.5-30	M12-1,75-50
	CARTRIDGE BOLT	M-B	M-M3-0.5-6	M-M3-0.5-10	M-M4-0.7-12	M-M6-1.0-20	M-M6-1.0-20	M-M10-1.5-25	M12-1,75-35
3	INSERT SCREW		S1845L5	S1845L5	S2045L6	S2555L6	S2555L6	S4095L6	S4095L6
4	T-WRENCH		T6	T6	T6	T8	T8	T15	T15
5	SPRING WASHER			CB-2	CB-3	CB-5	CB-5	CB-7	CB-10
6	MOUNTING WASHER			2306	3306	5306	5306	7306	10306
7	L-WRENCH		WR-2	WR-2	WR-2.5	WR-4	WR-4	WR-6	WR-8
8	SPANNER		GS12	GS12	GS35	GS35	GS35	GS710	GS710

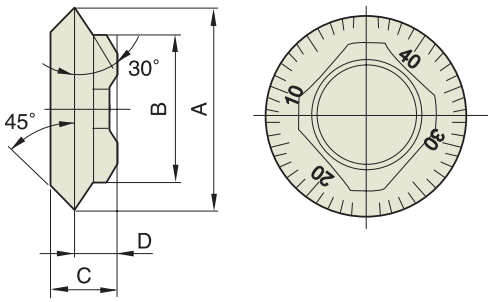

GRADUATED DIAL UNIT

SIZE	A	B	C	D
M1	9.53	6.99	4.45	2.54
M2	12.7	9.53	5.08	3.30
M3	15.88	11.3	5.59	3.56
M5	25.4	19.05	8.76	4.83
M7	34.93	25.40	11.68	7.11
M10	44.45	34.93	13.84	7.49

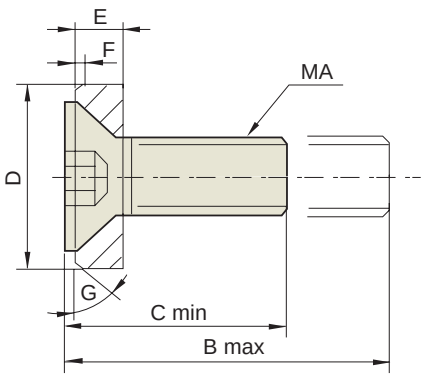

LOCK SCREW AND WASHER

SIZE	A	B	C	D	E	F	G
M1	M3	8	6	-	-	-	-
M2	M3	12	10	7.82	1.83	0.5	45°
M3	M4	15	12	10.9	2.46	1.0	45°
M5	M6	25	20	15.7	4.32	0.8	37°
M7	M10	30	25	23.7	6.35	1.30	37°
M10	M12	50	35	31.6	7.92	2.5	37°