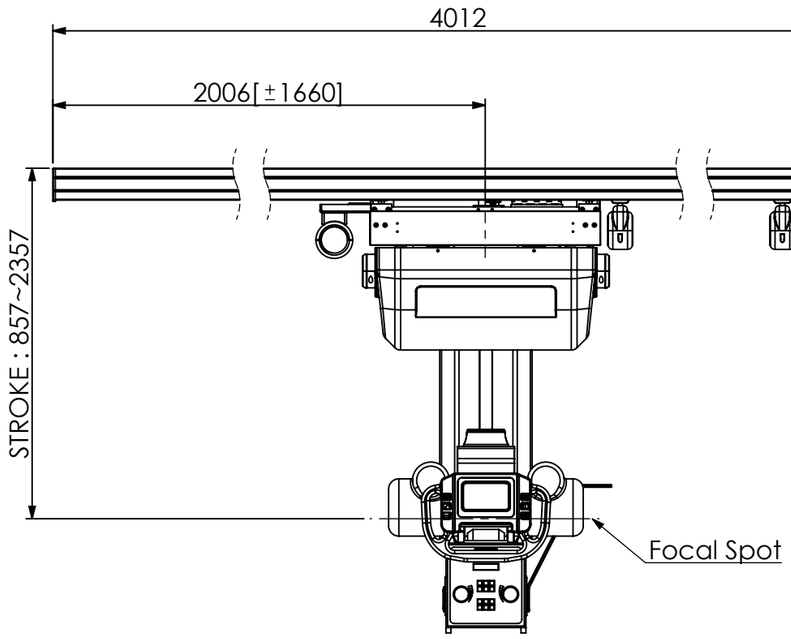

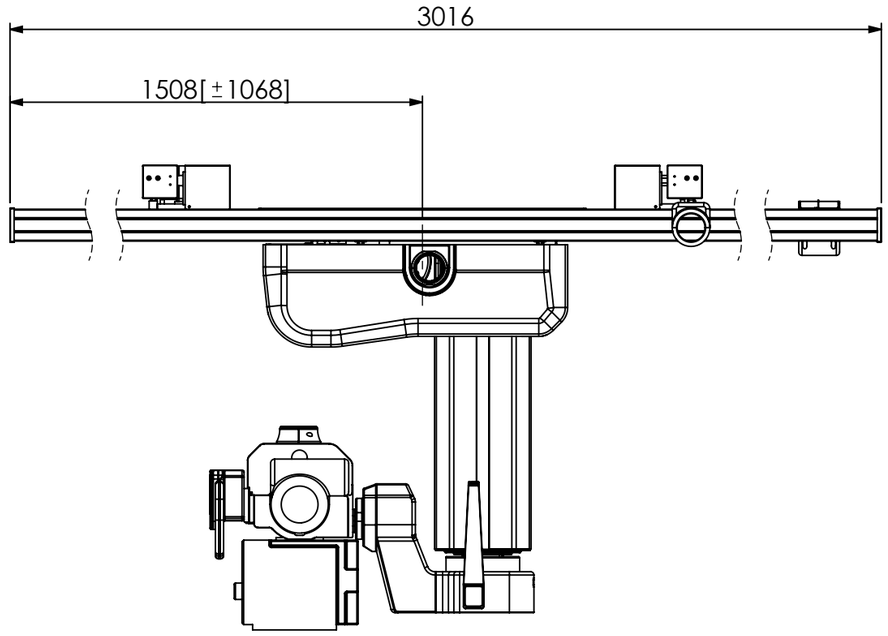

Z-axis : Both motorized and non-motorized

Rotation range around the vertical axis : - 150° to + 180° manual
Detent at 0°; ± 90°

Rotation range around the horizontal axis : ± 150° manual
Detent at 0°; ± 90°