Safety Precautions

The following notation conventions are used in this manual to indicate Safety Precautions.

⚠CAUTION

A CAUTION statement indicates a potentially hazardous situation that may result in personnel injury or equipment damage.

Note: Provides additional information needed to properly use the balance.

⚠CAUTION

To ensure the proper operation of the balance, observe the following precautions.

- Do not use the balance in hazardous areas.
  This includes areas where the balance is exposed to dust and flammable gases or liquids.
- Use the AC adapter supplied by CAS.
  To prevent the risk of electric shock, never disassemble the AC adapter.

  The AC adapter is designed for indoor use. Do not use the adapter in exterior environments or where it may be splashed by water.

  Ensure that the power supply voltage meets the indicated range of the AC adapter.
- Handle the balance carefully.
  The balance is a precision instrument. The door to the weighing chamber is glass, open and close it carefully.
- Do not connect the peripheral devices other than those recommended by CAS to the balance.
  The balance may not operate properly if peripheral devices other than those specified in this manual are used. When using the RS-232C interface, follow the instructions in Section *34.* ***"Windows® DIRECT FUNCTION"*** and Section ***37. "Configuration Diagram of Peripheral Units."***
- DO NOT disassemble the balance, accessories, or peripheral unit.

INTRODUCTION

The CAS corporation CAW, CAX, and CAY series electronic balances are high performance, multiple function balances.

The CAW/CAX/CAY series of balances are equipped with various application weighing functions, and unit conversion functions. These functions allow for a great variety of applications when used in conjunction with the peripheral units described in this manual.

The CAW/CAX series of balances incorporates clock functions, a built-in motor-driven calibration weight that can automatically calibrate sensitivity without the use of external weights and also has ISO and GLP corresponding outputs included in the standard specifications.

Read this manual carefully and keep it with the balance for future reference.

CONTENTS

1. BALANCE COMPONENTS....1

2. INSTALLATION....5

3. WARM-UP....6

4. PRECAUTIONS....6

5. MEASUREMENT PROCEDURE....7

6. MENU SELECTION....7

6.1 OPERATION MENU....8
6.2 FUNC.SEL MENU....10
6.3 SETTING MENU....12
6.4 INTFACE MENU....16
6.5 UNIT.SEL MENU....18
6.6 IF:USER MENU....20

7. SPAN CALIBRATION (SENSITIVITY ADJUSTMENT)....22

7.1 SPAN CALIBRATION USING THE BUILT-IN WEIGHT....22
7.2 SPAN CALIBRATION USING AN EXTERNAL WEIGHT....23
7.3 SPAN CHECK USING THE BUILT-IN WEIGHT....24
7.4 SPAN CHECK USING AN EXTERNAL WEIGHT....25

8. ZERO TRACKING....26

9. STABILITY DETECTION BAND....26

10. REGISTRATION, RELEASE, AND SELECTION OF MEASURE-MENT UNITS....26

10.1 PERCENTAGE....27
10.2 NUMBER OF PIECES....28
10.3 SOLID SPECIFIC GRAVITY....29
10.4 LIQUID SPECIFIC GRAVITY....30

11. AUTO PRINT....31

12. ANALOG DISPLAY....31

13. ADD LOAD WEIGHING....32

14. STANDARD SPAN CALIBRATION (SENSITIVITY ADJUSTMENT)....33

15. EXTERNAL WEIGHT VALUE FOR SPAN CALIBRATION....34

16. EXTERNAL WEIGHT VALUE FOR BUILT-IN WEIGHT CALIBRATION (CAW/CAX SERIES ONLY)....34

17. CALIBRATION OF THE BUILT-IN WEIGHT (CAW/CAX SERIES ONLY) 35
18. BALANCE ID NUMBER 35
19. OUTPUT CORRESPONDING TO GLP/GMP 36
20. AUTOMATIC SPAN CALIBRATION (PSC)(CAW SERIES ONLY) 37
21. CLOCK-CAL (CAW SERIES ONLY) 38
22. CLOCK-CAL STARTING TIME (CAW SERIES ONLY) 38
23. SOLVENT SPECIFIC GRAVITY FOR SOLID SPECIFIC GRAVITY MEASUREMENT 39
24. SINKER VOLUME FOR LIQUID SPECIFIC GRAVITY MEASUREMENT 40
25. DATE (CAW/CAX SERIES ONLY) 40
26. TIME (CAW/CAX SERIES ONLY) 41
27. PRINTING THE DATE & TIME (CAW/CAX SERIES ONLY) 42
28. PERFORMANCE CHECK 42
29. MAINTENANCE 44
30. TROUBLESHOOTING 44
30.1 ERROR MESSAGE 46
31. SPECIFICATIONS 47
32. PARTS LIST 51
33. USING PERIPHERAL UNITS 51
34. WINDOWS® DIRECT FUNCTION 52
35. INPUT AND OUTPUT DATA FORMAT 55
36. COMMAND CODE 56
37. CONFIGURATION DIAGRAM OF PERIPHERAL UNITS 58

1. BALANCE COMPONENTS

Composition:

The Instruction Manual and Inspection Acceptance Certificate & Installation Tag are included along with the items depicted below. Verify that all of the items are included in the shipping carton.

Name of Each Part:

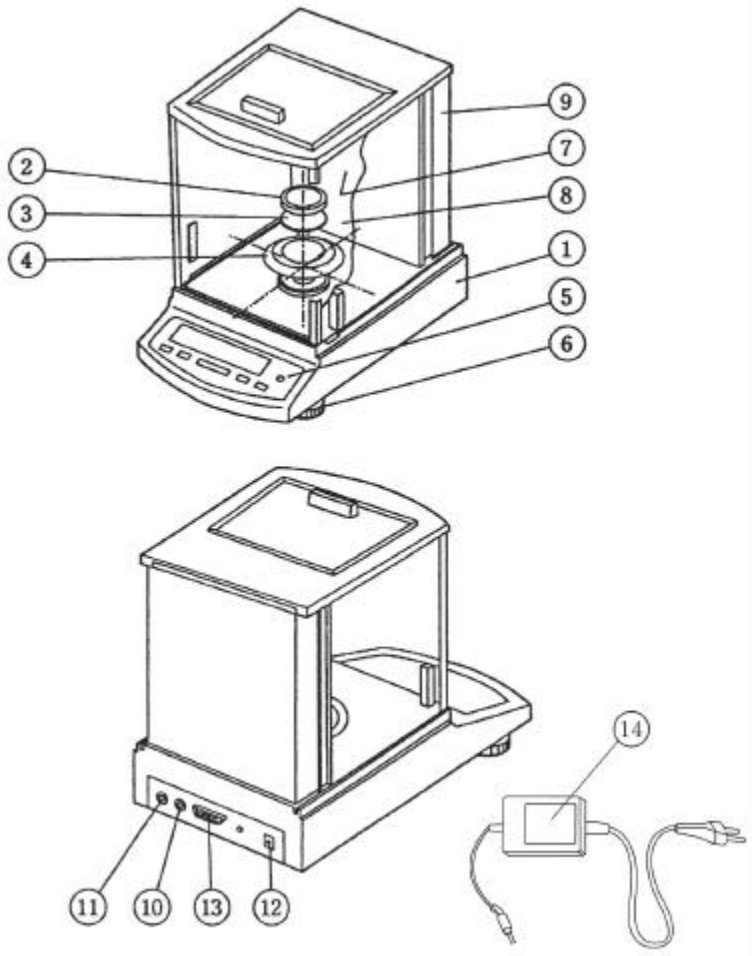

1. Main Balance Body
2. Pan
3. Pan Supporter
4. Anti-draft Ring
5. Level
6. Leveling Screw
7. Glass Doors
8. Weighing Chamber
9. Case Side Wall
10. Keyboard Connector
11. DATA I/O Connector
12. DCIN Connector
13. RS-232C Connector
14. AC Adapter

Symbol Displays



Analog display Unit display

An example of ìwhole lightingî display.

Display	How to read	Meaning during weighing
➡	Stability symbol	In mass display this symbol indicates that the balance is stable. In menu display, this symbol indicates the current menu setting. (*1)
	Weight symbol	Blinks when sensitivity adjustment is necessary. This symbol continues to blink until either a manual or automatic sensitivity adjustment is made. This symbol also blinks when the pre-set time for the Clock-CAL function is reached.
#	Num symbol	Indicates numeric value entry.
MENU	Menu symbol	Illuminates during menu selection.
*	Asterisk	Indicates that the displayed numeric value is not a mass value.
	Add Load Weighing symbol	Indicates that Add Load Weighing is ON for the application measurement function.
	Communication symbol	Illuminates during communication to external equipment through the RS-232C or DATA I/O connector.
BATT	Battery symbol	When the balance is operated with the optional external battery pack, this symbol illuminates to indicate that the battery voltage has dropped.
AP	Auto-Print symbol	Indicates that Auto-Print is ON for the application measurement function.
STAND-BY	STAND-BY symbol	Illuminates when the power is in STAND-BY mode.
▼	Inverse triangle symbol	Illuminates when the solid specific gravity unit is used. This symbol is also used as a substitute for the decimal point.

*1 Stability symbol
The displayed value may change while the stability symbol remains illuminated if the load is changing slowly or if the stability detection band has been set to a large value.

Key Functions

Key	During weighing		During menu selection (*1)	
	Pressing Once and Releasing	Pressing and Holding for About 3 Seconds	Pressing Once and Releasing	Pressing and Holding for About 3 Seconds
BRK / POWER	Switches between the operation and STAND-BY modes.	Exits the Application Measurement function.	Returns to the previous menu.	Returns to the mass display.
MENU / CAL	Enters sensitivity calibration or menu selection. Sets the sample weight in the air for solid specific gravity measurement.	Enters the setting menus when piece counting or % units are displayed.	Moves to the next Menu Map item.	
↵ / →O/T←	Tares the balance. (Displays zero) (*5)		Selects and sets the currently displayed Menu Map item.	
▲ / UNIT	Changes the unit selection. (*2)	Switches between the 1d and 10d display. (*3)	Increases the numeric value of the blinking digit by 1.	
► / PRINT	Sends the displayed value to an attached peripheral device.	During STAND-BY or mass display, the current time is sent to an attached peripheral device. (*4)	Moves the blinking cursor to the next digit.	

*1 Refer to Section 6. “MENU SELECTION”.

*2 Units other than “g” must be registered and set before they can be used for measurement. Gramme (or gram) (g) is the only unit that is registered

before shipment. To register other units, refer to Section 10. “REGISTRATION, RELEASE, AND SELECTION OF MEASUREMENT UNITs”.

*3 When the unit is set to 10d, the resolution of the minimum display is decreased by one decimal place.

*4 Applicable to CAW/CAX Series balances only.

*5 TARE may be printed on the key instead of →O/T←. However, the functions of the key are the same.

2. INSTALLATION

⚠ **Power Supply Voltage**

- Do not use any AC adapters other than the one provided as a standard accessory.
- Confirm the power supply voltage.
- Confirm that the voltage of the power supply conforms to the one indicated on the AC adapter.

Installation Site

The ideal operating environment for the balance is in a location where the temperature is 20°C ± 2°C with a relative humidity of 45 - 60% RH and the conditions are stable.

Install the balance on a solid table. Ideally the table should be made of stone. Choose a site that is dust free and is not exposed to vibrations, wind, direct sunlight or electromagnetic fields.

⚠ **Do not place the balance in an environment where it will be exposed to corrosive or flammable gasses.**

Installation Procedure

(1) Install the pan supporter then the anti-draft ring and finally the pan in this order.
(2) Level the balance by turning the leveling screws to bring the bubble of the level indicator into the red circle.
(3) Verify that the pan is empty and connect the AC adaptor to the outlet.
(4) After self-check, the balance automatically performs span calibration and OFF is displayed. It is not possible to interrupt the span calibration that occurs right after the power is turned ON. Span calibration is not performed with the CAY series balances.
(5) Press the POWER/BRK key. "Whole lighting" is displayed for about 1 second then the balance automatically goes to a zero mass display and the balance is ready for weighing.
(6) Press the POWER/BRK key in the mass display to put the balance in the STAND-BY mode. The STAND-BY symbol illuminates indicating that the balance is in the STAND-BY mode.
(7) Allow the balance to warm up for 4 hours in the STAND-BY mode.
(8) Conduct the Performance Check. ☞ See Section ***28. "Performance Check."***
(9) Set the date and time on the balance.
☞ See Section ***25 "DATE"*** and Section ***26 "TIME."***

Moving the Balance

- Before moving the balance, confirm that it is not in the process of span calibration. Unplug the AC adapter from the power outlet and transfer the balance.

⚠ Disconnecting the power supply or moving the balance during span calibration or check may cause balance failure.

3. WARM-UP

- Warming-up the balance for at least four (4) hours allows for accurate measurement.
- Do not disconnect the AC adapter even when the balance is not in use.
  Instead, press the POWER/BRK key to put the balance in the STAND-BY (warm-up) mode.
- Disconnect the AC adapter from the outlet if the balance will not be used for a period of one month or longer.

4. PRECAUTIONS

Observe the following precautions.

Note:

- Do not insert metal tools inside the balance housing.
- Do not open the balance housing.
- Do not allow water or other liquids to enter the balance housing.
- Do not place a load on the pan that exceeds the mass range of the balance.
- Do not allow magnetized articles near the balance.
- Do not connect any instruments to the balance connectors other than those designated in this manual.
- Do not drop anything on the pan.
- The doors to the weighing chamber are glass. Open and close them carefully.
- Before transporting the balance, pack the balance into the original shipping carton to prevent damage.

5. MEASUREMENT PROCEDURE

Preparations Before Measurement

Warm-up the balance before starting measurement.

Setting the Measuring Mode

(1) Press the POWER/BRK key.

(2) The STAND-BY indicator goes out and whole lighting is displayed. Verify that all segments of the display illuminate.

If the balance is set to automatically perform span calibration it is executed before zero is displayed.

(3) Zero is displayed and the balance is in the measuring mode.

Measurement

(1) If a weighing vessel (tare) is used, place it on the pan and wait for the stability symbol ( ) to illuminate, then press the →O/T← key.

(2) Verify that 0 is displayed.

(3) Add the sample and read the display after the stability symbol appears.

6. MENU SELECTION

This balance is designed to ensure efficient measurement by selecting measuring parameters to properly fit the environment and purpose of the weighing. Use Menu Selection to edit the measurement parameters.

The menu of an CAW, CAX, and CAY series balance consists of four levels. Press the CAL/MENU key to cycle through the items within a menu level. Press the →O/T← key to choose the current item or move to the next menu level. Press the POWER/BRK key to move back one level. Press and hold the POWER/BRK key for more than three seconds to return to the mass display.

6.1 Operation Menu

Frequently used menus are contained in the first menu level

(1) Press the CAL/MENU key during mass display.

(2) "i CAL" (or standard span calibration) is displayed. (CAW/CAX series only)

(3) The display changes each time the CAL/MENU key is pressed.

When the desired item is displayed, press the →O/T← key to select it.

(→): Press the →O/T← key (←): Press the POWER/BRK key
(↓): Press the CAL/MENU key

0.0000 → Mass display

↓

iCAL → Performs selected standard span calibration. (CAW/CAX series only)

↓

St.b1t → A display of the currently set conditions ☞ See the example of the default conditions at the ***bottom of this page.***

↓

Stnd → Sets the Standard Measurement mode

↓

SAmPLE → Sets the Sample Pouring mode

↓

Hi-Stb → Sets the High Stability mode

↓

FUnC.SEL ↔ Enters the next menu level (application measurement and individual setting modes).
☞ See Section ***6.1 "FunC.SEL Menu."***

↓

SettinG ↔ Enters the next menu level (system setting mode).
☞ See Section ***6.2 "SEttinG Menu."***

↓

IntFACE ↔ Enter the next menu level (input/output format setting mode).
☞ See Section ***6.3 "intFACE Menu."***

- Normal measurement is performed with the CAW, CAX, and CAY series balances by setting the balance to "Stnd" (Standard Measurement mode). No other settings are required.
- If the balance environment is poor and the display does not stabilize easily, select "Hi-Stb" (High Stability mode).
- To perform high speed sampling or sample minute amounts, select "SAmPLE" (Sample Pouring mode).

(→): Press the →O/T← key (←): Press the POWER/BRK key
(↓): Press the CAL/MENU key

Display of the Currently Set Conditions (Example)

The current balance conditions are displayed in abbreviation.

Indicates that automatic span calibration is ON.

Indicates that the GLP corresponding output is ON.

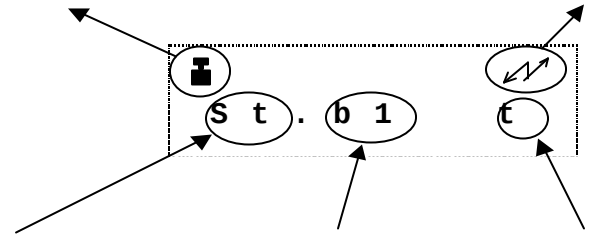

Measuring mode		Stability detection band		Zero tracking
Standard:	St	0.1mg:	b1	ON: t is displayed.
Sample Pouring:	SA	0.5mg:	b5	OFF:t is not displayed.
High Stability:	Hi	1.0mg:	b10	

6.2 FUnC.SEL Menu

From the mass display, press the CAL/MENU key repeatedly until "FUnC.SEL" is displayed. Press the →O/T← key to enter the next menu level. Items in this menu level include span calibration, zero tracking, stability detection band, selection or release of units, automatic PRINT, analog display and Add Load Weighing.

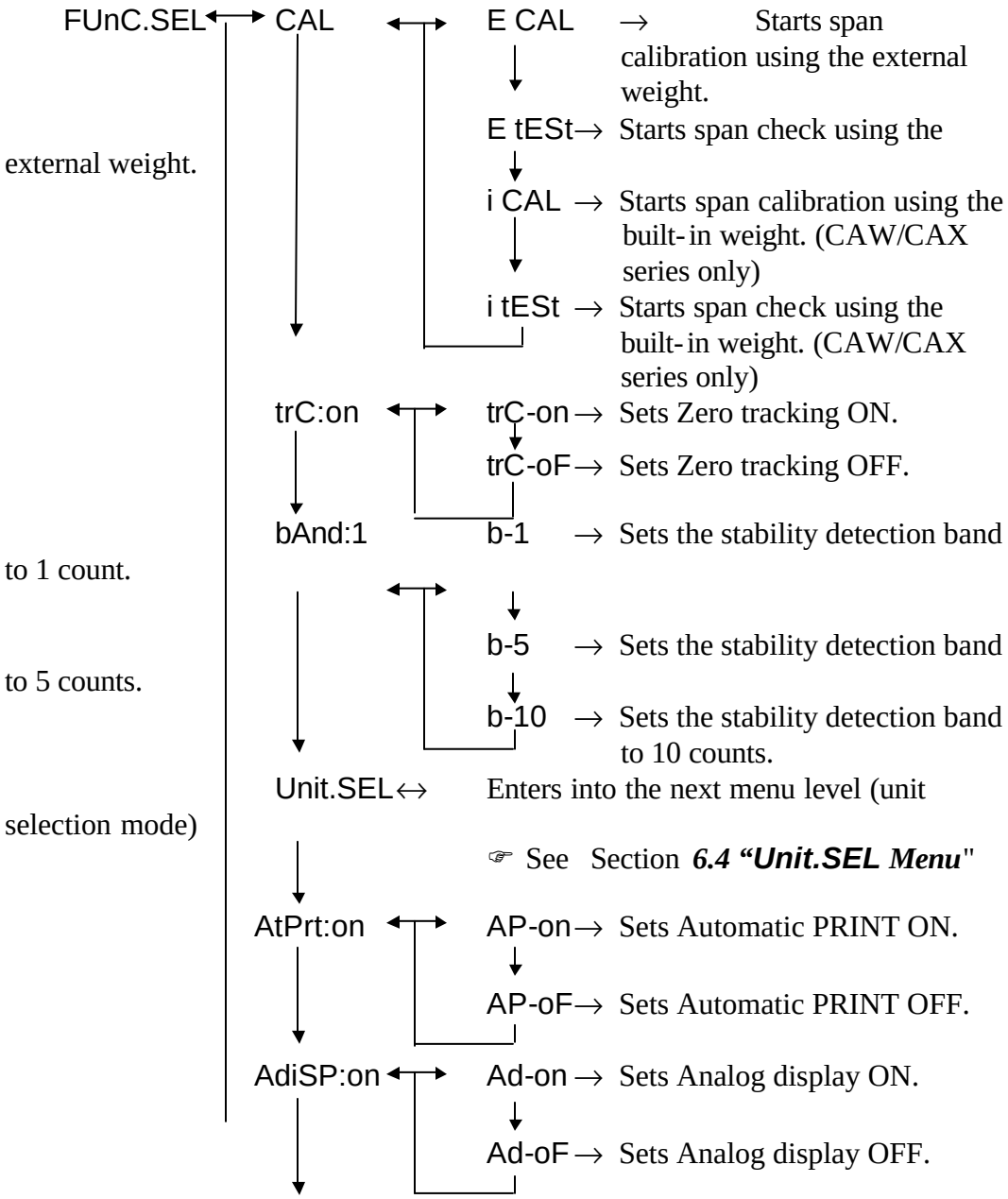

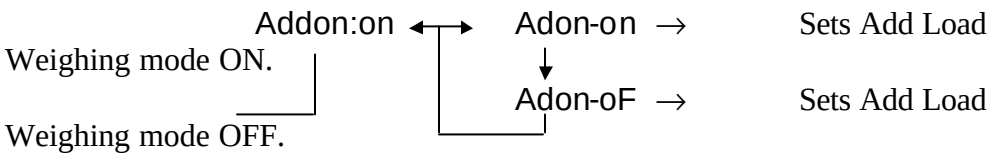

(→): Press the →O/T← key (←): Press the POWER/BRK key.
(↓): Press the CAL/MENU key.

- For better stability at zero point, set the zero tracking ("trC-on" and "trC-oF") to "trC-on." To observe the variation of the mass amount when a liquid or powder is slowly injected, set zero tracking to "trC-oF."
- The stability detection band is normally set to "b-1."
- When the stability detection band is set larger, a less stable mass display is required to light the stability mark.

6.3. SEttinG Menu

From the mass display, press the CAL/MENU key repeatedly until "SEttinG" is displayed. Press the →O/T← key to enter into the next menu level. Items that are set in this menu level include calibration of the built-in weight, standard span calibration, external weight value for span calibration, external weight value for calibration of the built-in weight, balance ID, solvent and sinker specific gravity, execution time for Clock-CAL, date, time, printing corresponding to GLP/GMP, automatic span calibration, Clock-CAL and date/time print.

Operate the keys according to the following descriptions to set each item.

Select standard span calibration method:

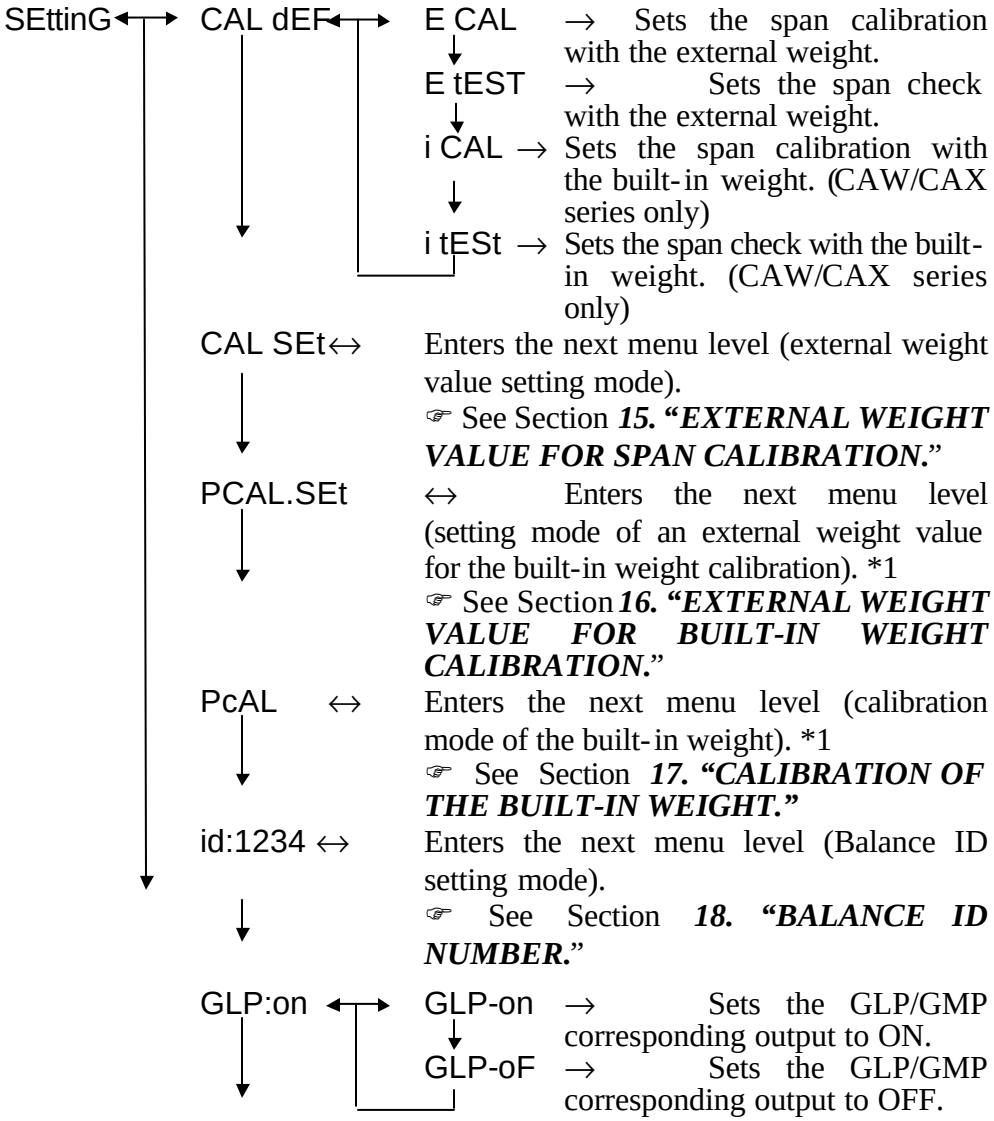

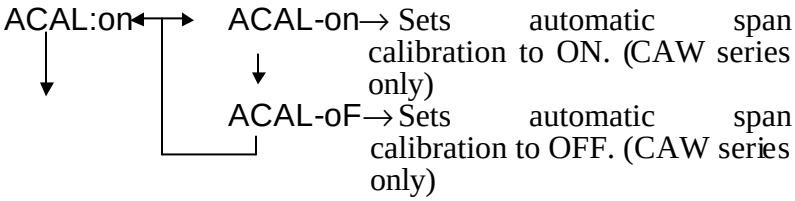

A B

(→): Press the →O/T← key (←): Press the POWER/BRK key.

(↓): Press the CAL/MENU key.

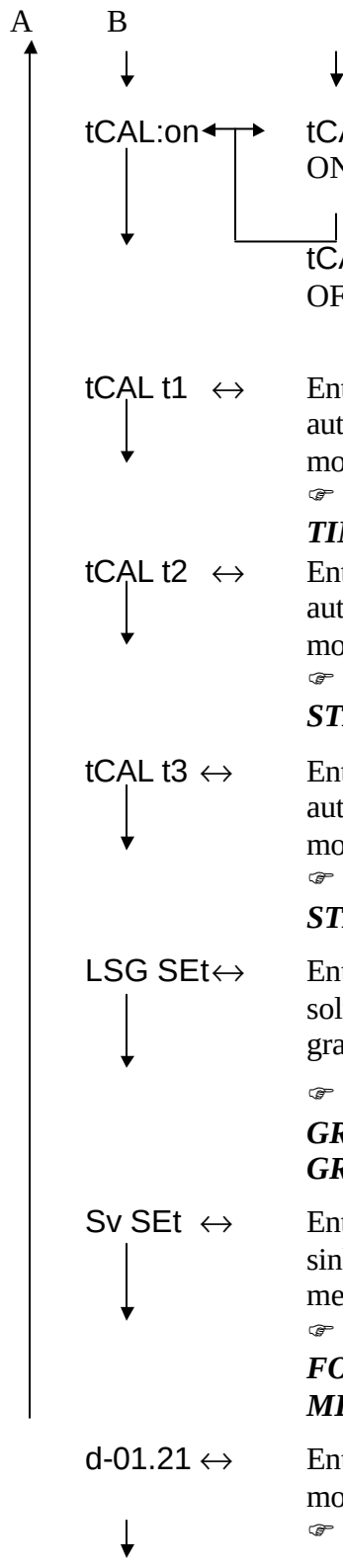
A
B
tCAL:on
tCAL-on →
Set Clock-CAL to ON. (CAW series only)
tCAL oF →
Set Clock-CAL to OFF. (CAW series only)
tCAL t1 ↔
Enters the next menu level (Clock-CAL automatic span calibration time setting mode). (CAW series only)
☞ See Section 22."Clock-CAL STARTING TIME."
tCAL t2 ↔
Enters the next menu level (Clock-CAL automatic span calibration time setting mode). (CAW series only)
☞ See Section 22. "Clock- CAL STARTING TIME."
tCAL t3 ↔
Enters the next menu level (Clock-CAL automatic span calibration time setting mode). (CAW series only)
☞ See Section 22. "Clock- CAL STARTING TIME."
LSG SEt↔
Enters the next menu level (setting of the solvent specific gravity for solid specific gravity measurement)
☞ See Section 23. "SOLVENT SPECIFIC GRAVITY FOR SOLID SPECIFIC GRAVITY MEASUREMENT."
Sv SEt ↔
Enters the next menu level (setting of the sinker volume for liquid specific gravity measurement)
☞ See Section 24. "SINKER VOLUME FOR LIQUID SPECIFIC GRAVITY MEASUREMENT."
d-01.21 ↔
Enters the next menu level (date setting mode). (CAW/CAX series only)
☞ See Section 25. "DATE."

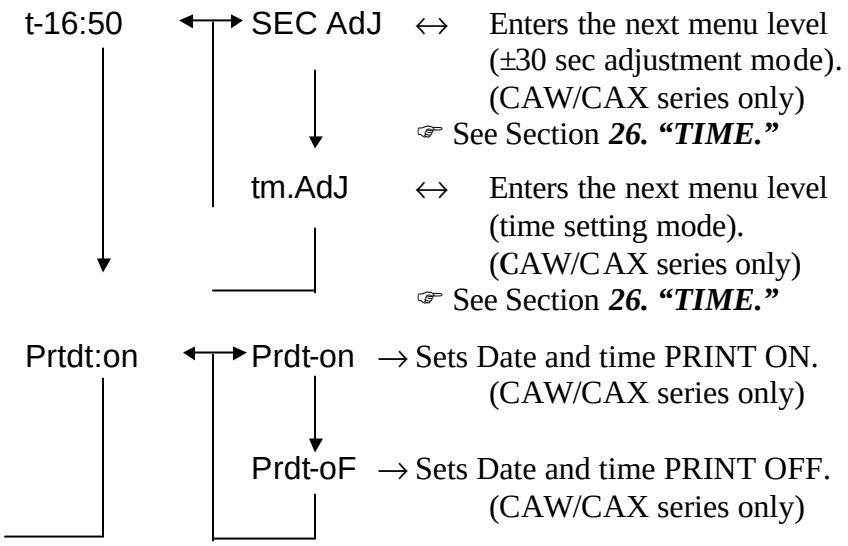

(→): Press the →O/T← key (←): Press the POWER/BRK key. (↓): Press the CAL/MENU key.

6.4 intFACE Menu

From the mass display, press the CAL/MENU key repeatedly until "intFACE" is displayed. Press the →O/T← key to enter the next menu level. Select the input and output format in this menu. Five preset configurations are available.

Select a standard format to set the registered baud rate, parity (and bit length), stop bit, delimiter, and data format all at the same time.

A user format is provided in addition to the preset formats. The user can edit the communication parameters individually in the user format.

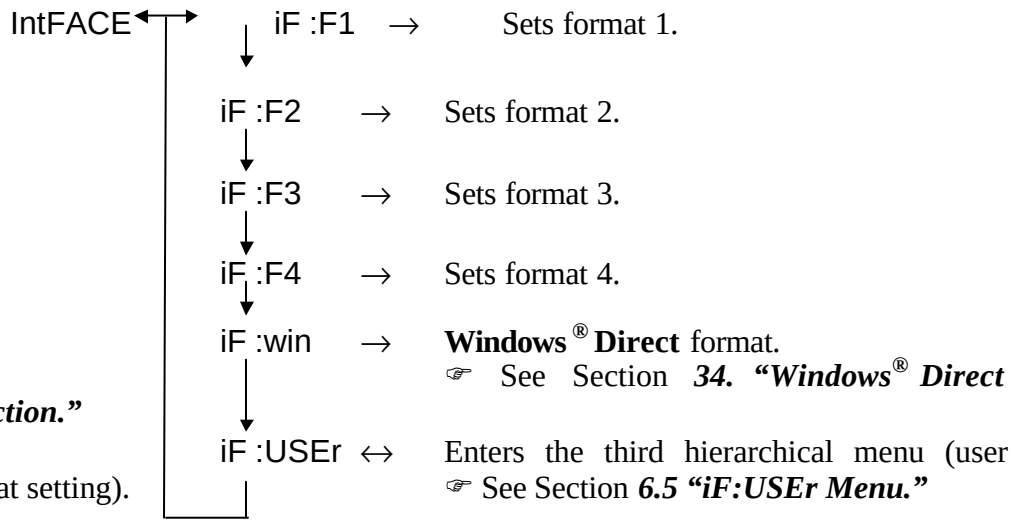

(→): Press the →O/T← key (←): Press the POWER/BRK key.
(↓): Press the CAL/MENU key.

Communication parameters for intFACE --- F1s to F4

LCD display	Applicable model (manufacturer)	Baud rate	Hand-shake	Delimiter	Parity (bit length)	Stop bit	Format
iF:F1	AEG	1200	Hardware	C/R	None (8)	1	UF1
iF:F2	AEG expansion format	1200	Hardware	C/R	None (8)	1	UF2
iF:F3	Mettler	2400	Hardware	C/R+L/F	Even number (7)	1	UF3
iF:F4	Sartorius	1200	Hardware	C/R+L/F	Odd number (7)	1	UF4
iF:win	Windows® Direct	300	Software	win	None (8)	1	UF1
iF:USEr	User setting	←	←	←	←	←	←

*F1 is the standard communication format used by CAS corporation.

*Set the format to “F1” when using an Electric Printer EP-60A.

*F2 is the expansion of F1. When this format is set, the balance will send the mass result to the PC.

6.5 Unit.SEL Menu

The units available for selection by pressing the UNIT key during mass display are set in this menu.

From the mass display, press the CAL/MENU key repeatedly until "FUnC.SEL" is displayed. Then press the →O/T← key repeatedly until "Unit.SEL" is displayed to enter the unit registration and release menu.

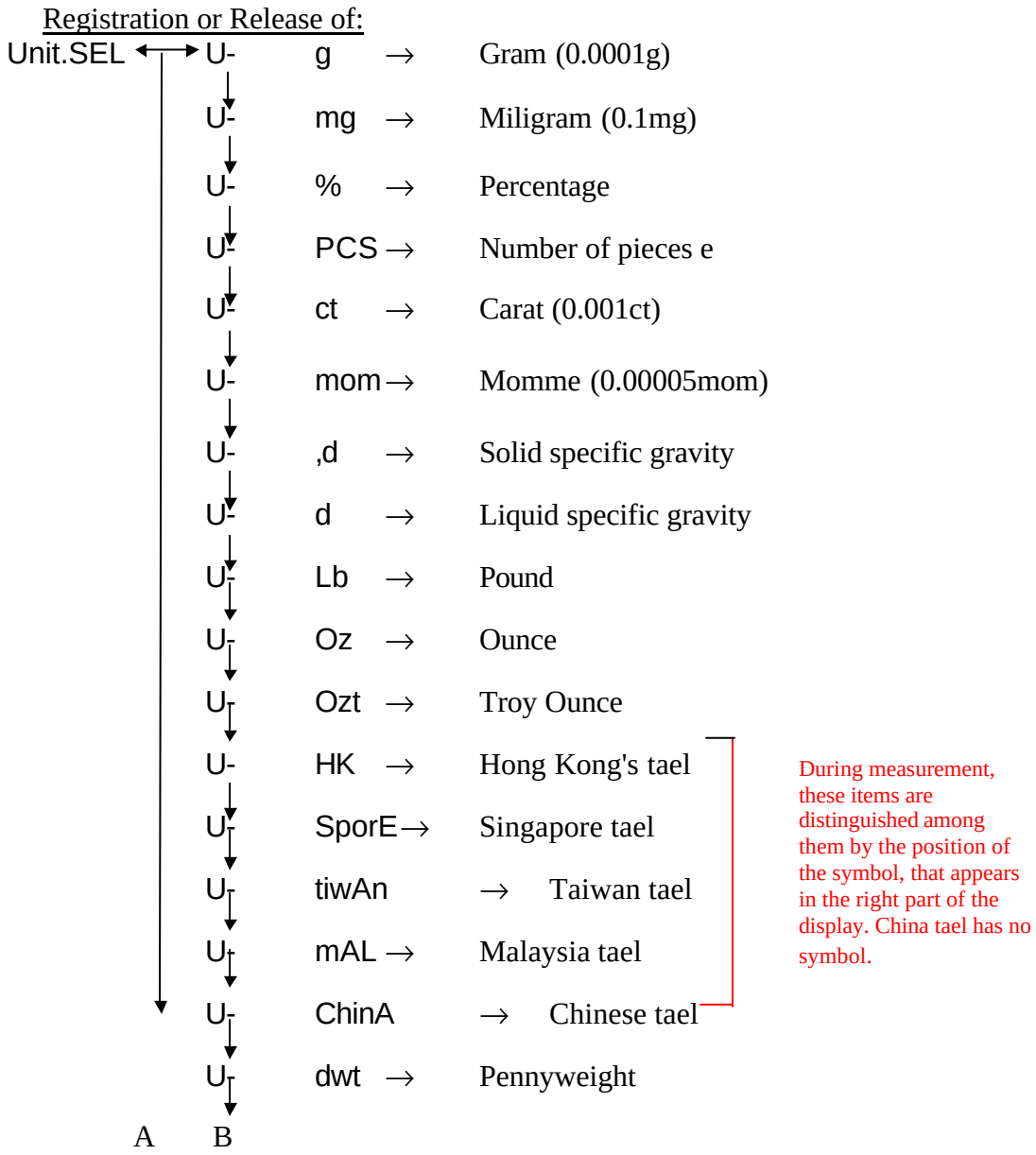

(→): Press the →O/T← key (←): Press the POWER/BRK key.
(↓): Press the CAL/MENU key.

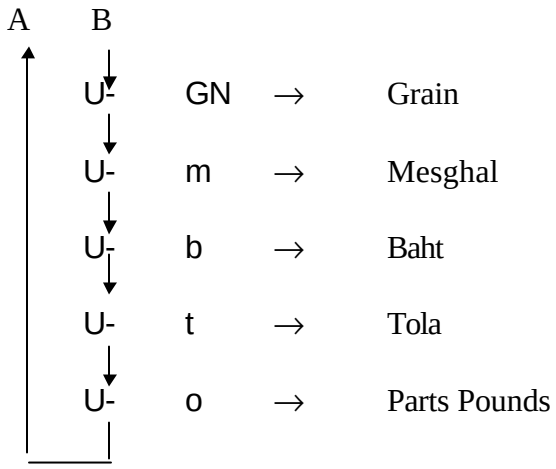

(→): Press the →O/T← key (←): Press the POWER/BRK key.
(↓): Press the CAL/MENU key.

Units in AW/AX/AY series are converted with the following values.

1g =0.001kg
=1000mg
=5ct
=0.266667 mom
=0.00220462 Lb
=0.0352740 Oz
=0.0321507 Ozt
=0.0267173 TL-HK
=0.0264555 TL-Singapore
=0.0266667 TL-Taiwan
=0.0264600 TL-Malaysia
=0.0266071 TL-China
=0.643015 dwt
=15.4324 GN
=0.216999 m
=0.0657895 b
=0.0857339 t
=1.12877 o

Note: The unit of parts pounds can not be properly printed.

6.6 iF:USEr Menu

From the mass display, press the CAL/MENU key repeatedly until "intFACE" is displayed. Press the →O/T← key when "intFACE" is displayed, then press the CAL/MENU key repeatedly until "iF:USEr" is displayed. To enter the user communication format menu, press the →O/T← key when "iF:USEr" is displayed. Baud rate, parity (and bit length), stop bit, delimiter, data format, and handshake can be set individually in the user format.

Operate the keys according to the following descriptions and perform each setting. (**** is the current setting.)

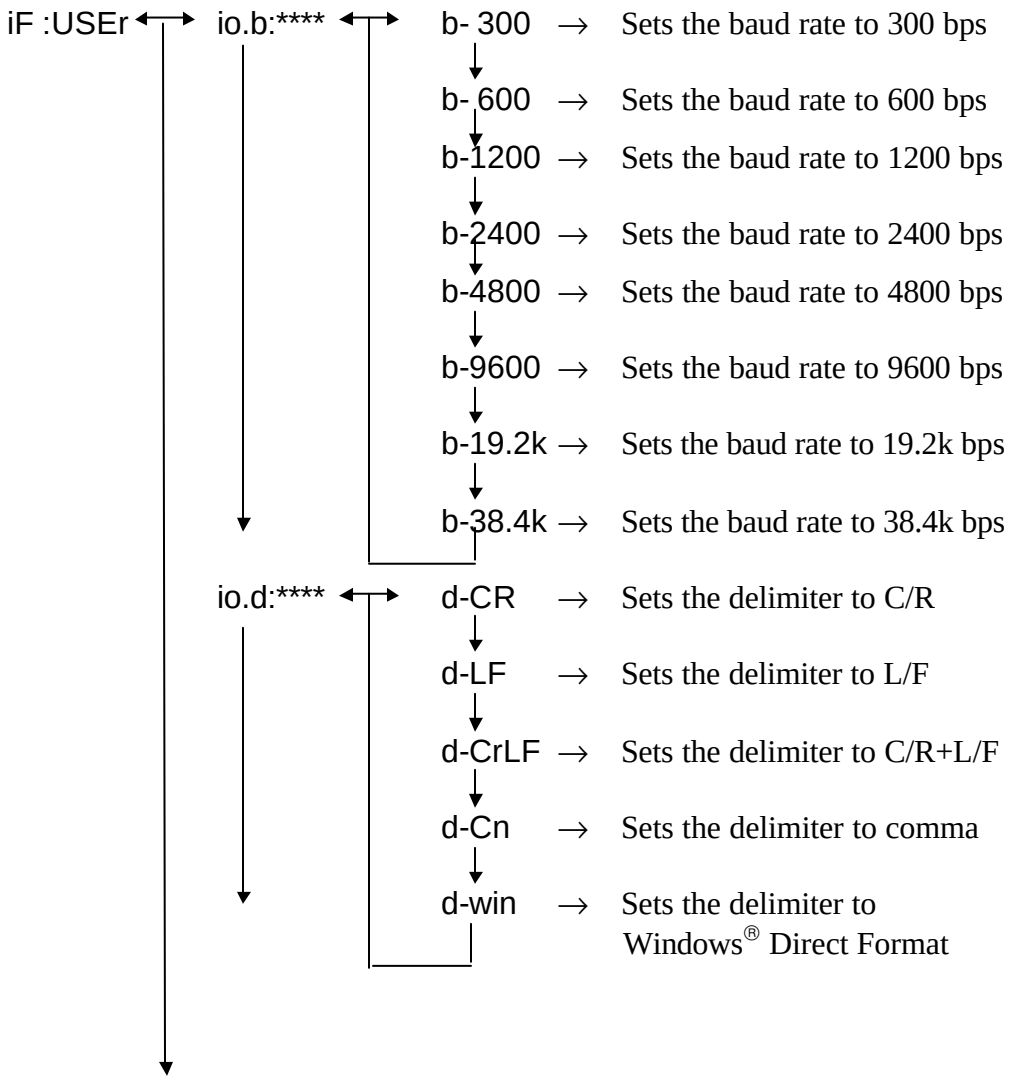

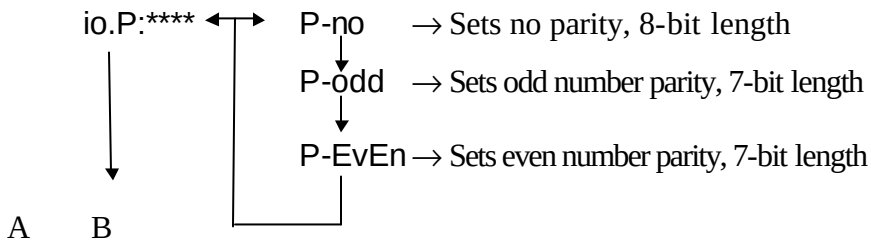

(→): Press the →O/T← key (←): Press the POWER/BRK key.
(↓): Press the CAL/MENU key.

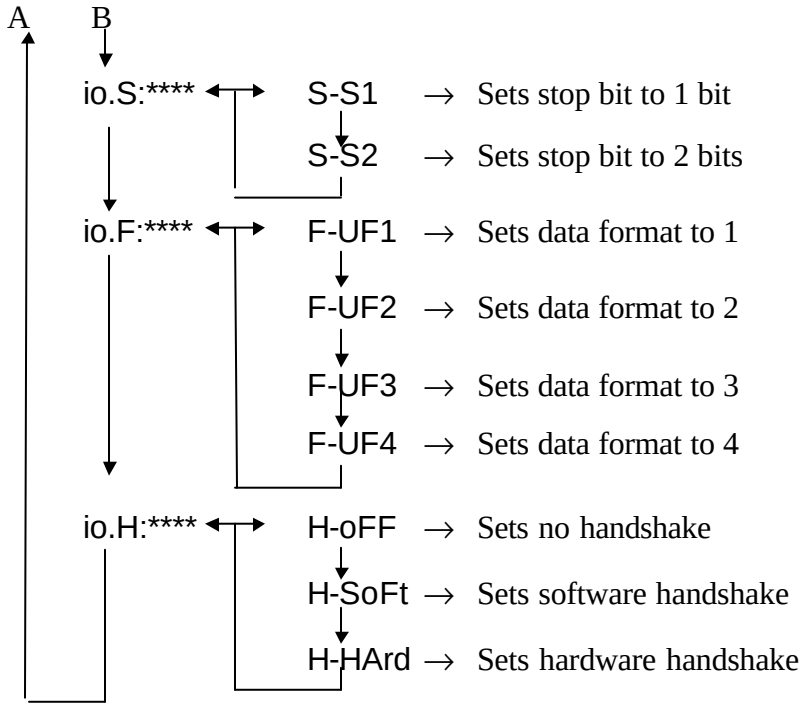

(→): Press the →O/T← key (←): Press the POWER/BRK key.
(↓): Press the CAL/MENU key.

7. SPAN CALIBRATION (Sensitivity Adjustment)

The electronic balance measures mass by electronically compensating for terrestrial gravitation. Since gravitation acceleration varies slightly in different areas of the world, span calibration is required when the balance is installed. Temperature also affects accuracy. Calibration should be performed whenever there is a significant temperature change. It is good practice to calibrate the balance before making important measurements and whenever the balance is moved or disturbed, such as if something falls on the pan.

Though the temperature coefficient of sensitivity of the balance is adjusted at less than ±2ppm/°C, readability 0.1mg corresponds to 1ppm (0.1mg/100g = 1×10^{-6}) in regards to 100g weighing. This means that a slight temperature change may cause a measuring error. The CAW series balances are designed to automatically perform span calibration when there is a change in room temperature. This feature is called **"Automatic Span Calibration (PSC)"** and is only available on the CAW series balances. The stability of sensitivity is maintained within ±2ppm regardless of any change in environmental temperature. It is possible for the operator to perform span calibration at any time. This is referred to as **"Manual Calibration."** Manual Calibration can be performed using an external weight (CAW/CAX/CAY series) or the built-in weight (CAW/CAX series only).

Span calibration can be automatically performed at designated times up to three times in a day. This is referred to as **"Clock-CAL"** and is only available on the CAW series balances.

7.1 Span Calibration Using the Built -in Weight

Only the CAW/CAX series balances have the built-in weights. The following procedure describes span calibration using the built-in weights.

Procedure

(1) Warm-up the balance.
☞ See Section ***3. "WARM-UP."***

(2) Verify that the balance is level.

(3) Verify that the balance pan is empty and press the →O/T← key to zero the display.

(4) From the mass display, press the CAL/MENU key several times. When "Func.SEL" appears, press the →O/T← key.

(5) Press the →O/T← key when "CAL " is displayed.

(6) Press the CAL/MENU key. When "iCAL " appears, press the →O/T← key.
Span calibration starts at this point.

NOTE: If iCAL has been selected in the CAL dEF menu in SettinG, then steps (4), (5), and (6) can be
replaced by simply pressing the CAL/MENU key once and then pressing the O/T key. (iCAL is the standard
setting on CAW/CAX series.) See 14. STANDARD SPAN CALIBRATION (Sensitivity Adjustment).

(7) When "CAL-2" is displayed, the balance verifies the zero point.

(8) When "CAL 1" is displayed, the built-in weight is automatically placed on the pan inside the balance.

(9) When "CAL 0" is displayed, the zero point is verified again.

(10) Span calibration is complete when "CAL End" is displayed for several seconds and the display returns to mass display.

(11) The calibration result is output to an external unit if the GLP/GMP corresponding output is ON.

7.2 Span Calibration Using an External Weight

The following procedure describes how to perform the span calibration using an external weight.

Procedure

(1) Warm-up the balance.
☞ See Section ***3. "WARM-UP."***

(2) Verify that the balance is level.

(3) Verify that the balance pan is empty and press the →O/T← key to zero the display.

(4) From the mass display, press the CAL/MENU key several times. When "Func.SEL" is displayed, press the →O/T← key.

(5) Press the →O/T← key when "CAL " is displayed.

(6) Press the CAL/MENU key. When "E CAL " is displayed, press the →O/T← key. Span calibration starts at this point.

NOTE: If E CAL has been selected in the CAL dEF menu in SettinG, then steps (4), (5), and (6) can be replaced by simply pressing the CAL/MENU key once and then pressing the O/T key. (E CAL is the

standard setting on CAY series.) See 14. STANDARD SPAN CALIBRATION (Sensitivity Adjustment).

(7) Zero appears on the display and blinks.

(8) The predetermined mass for the calibration weight is displayed and blinks.

(9) Place the correct calibration weight on the pan.

(10) Zero appears on the display and blinks.

(11) Unload the weight.

(12) If the GLP/GMP corresponding output is ON, the calibration result is output to an external unit.

(13) Span calibration is complete when "CAL End" is displayed for several seconds and the display returns to mass display.

7.3 Span Check Using the Built-in Weight

The built in weight is only available on the CAW/CAX series balances.

Follow the procedure below to perform span check using the built-in weight.

Procedure

(1) Warm-up the balance.

☞ See Section ***3. "WARM-UP."***

(2) Verify that the balance is level.

(3) Verify that the balance pan is empty and press the →O/T← key to zero the display.

(4) From the mass display, press the CAL/MENU key several times. When "Func.SEL" is displayed, press the →O/T← key.

(5) Press the →O/T← key when "CAL" is displayed.

(6) Press the CAL/MENU key. When "itESt" is displayed, press the →O/T← key.
Span calibration starts at this point.

(7) When "tESt 2" is displayed, the balance verifies the zero point.

(8) When "tEST 1" is displayed, the built-in weight is automatically placed on the pan inside the balance.

(9) When "tESt 0" is displayed, the balance verifies the zero point again.

(10) The deviation of sensitivity after previous span calibration is displayed when this check is complete.

(11) If the GLP/GMP corresponding output is ON, the check result is output to an external unit.

(12) Span check is complete when "tEStEnd" is displayed for several seconds and the display returns to the mass display.

7.4 Span Check Using an External Weight

Follow the procedure below to perform span check using an external weight.

Procedure

(1) Warm-up the balance.

☞ See Section ***3. "WARM-UP."***

(2) Verify that the balance is level.

(3) Verify that the balance pan is empty and press the →O/T← key to zero the display.

(4) From the mass display, press the CAL/MENU key several times. When "Func.SEL" is displayed, press the →O/T← key.

(5) Press the →O/T← key when "CAL" is displayed.

(6) Press the CAL/MENU key. When "E tESt" is displayed, press the →O/T← key. Span check starts at this point.

(7) Zero appears on the display and blinks.

(8) The predetermined mass for the calibration weight is displayed and blinks.

(9) Place the correct calibration weight on the pan.

(10) Zero appears on the display and blinks.

(11) Unload the weight.

(12) If the GLP/GMP corresponding output is ON, the calibration result is output to an external unit.

(13) Span check is complete when "tESt End" is displayed for several seconds and the display returns to the mass display.

8. ZERO TRACKING

(1) From the mass display, press the CAL/MENU key several times. When "FUnC.SEL" is displayed, press the →O/T← key.

(2) Press the CAL/MENU key several times until "trC:**" is displayed. The ** indicates the current setting. "on" indicates zero tracking is activated, and "oF" indicates it is released.

(3) Press the →O/T← key to change the "trC:**" setting.

(4) Each time CAL/MENU is pressed, "trC-oF" or "trC-on" is displayed. The current setting is displayed with the stability symbol. When the desired item is displayed, press the →O/T← key to change the setting, or press the POWER/BRK to return to "trC:**."

(5) When "trC:**" is displayed, press and hold the POWER/BRK key to return to the mass display.

9. STABILITY DETECTION BAND

(1) From the mass display, press the CAL/MENU several times. When "FunC.SEL" is displayed, press the →O/T← key.

(2) Press the CAL/MENU key several times. When "bAnd:**" is displayed, press the →O/T← key. The ** indicates the current setting.

(3) Each time CAL/MENU is pressed, "b-1", "b-5", and "b-10" are displayed. The current setting is displayed with the stability symbol. When the desired item is displayed, press the →O/T← key to change the setting.

(4) Press the POWER/BRK key to return to "bAnd:**."

10. REGISTRATION, RELEASE, AND SELECTION OF MEASUREMENT UNITS

Registration of Measurement Units

(1) From the mass display, press the CAL/MENU several times. When "FUnC.SEL" is displayed, press the →O/T← key.

(2) Press the CAL/MENU key several times. When "Unit.SEL" is displayed, press the →O/T← key.

(3) Each time the CAL/MENU key is pressed, a unit that can be registered is displayed.
Currently registered units are displayed with the stability symbol.

(4) When the desired unit is displayed, press the →O/T← key to register it.

(5) To return to the mass display, press and hold the POWER/BRK key.

Release of the Measurement Unit

Perform operations (1) to (3) above to display the units. When the currently registered unit with the stability symbol is displayed, press the →O/T← key to release registration of that unit.

Selection of Units

Press the UNIT key during mass display to switch between the registered units.

If reference values are not set, as with % and PCS, " --- " is displayed instead of a numeric value.

☞ See Section ***10.1 "Percentage"*** or Section ***10.2 "Number of Pieces"*** for more information on setting reference values.

10.1 Percentage

Procedure

This balance is capable of displaying mass values in the % unit by setting a reference sample as 100%.

(1) Register the % unit.

☞ See Section ***10. "REGISTRATION, RELEASE, AND SELECTION OF MEASUREMENT UNITS."*** If % unit is already registered, it is not necessary to register it again.

(2) Place the weighing vessel on the pan and press the →O/T← key.

(3) Add the reference sample.

(4) From the mass display, press the UNIT key to select the % unit.

(5) Press and hold the CAL/MENU key until "SEt 100%" is displayed.

(6) Confirm that the stability symbol is lit and press the →O/T← key.

(7) "SEt" is displayed for several seconds and then the % unit is displayed.

The minimum display value varies depending on the mass of the reference sample. (REF.)

The following reference sample mass is the count value when the minimum display value is regarded as 1.

If it is impossible to convert the value into %, "Err 20" appears for several seconds and then, the display returns to the mass display.

(H type)

<REF.<Min. display value×100	% conversion not possible
Min. display value×100 <REF.<Min. display value×1000	100%
Min. display value×1000 <REF.<Min. display value×10000	100.0%
Min. display value×10000 <REF.<Min. display value×100000	100.00%
Min. display value×100000 <REF.<Min. display value×1000000	100.000%
Min. display value×1000000 <REF.	100.0000%

10.2 Number of Pieces

This balance is able to display the number of pieces (PCS) by measuring the mass of the sample. The reference numbers to measure unit mass amount are 10, 20, 50, and 100pcs. The larger the reference number, the higher the accuracy of measurement. The minimum unit mass is "0.0100 g."

Procedure

(1) Register the number of pieces (PCS) unit.
☞ See Section ***10. "REGISTRATION, RELEASE, AND SELECTION OF MEASUREMENT UNIT."***
If PCS is already registered, it is not necessary to register it again.

(2) Place a weighing vessel on the pan and press the →O/T← key.

(3) Add the number of samples you wish to measure to the pan.

(4) Confirm that the stability symbol has illuminated.

(5) Press the UNIT key in mass display to select the PCS unit.

(6) Press and hold the CAL/MENU key until "SEt 10PCS" is displayed.

(7) Every time the CAL/MENU key is pressed, the display changes in the order "SEt 10PCS", "SEt 20 PCS", "SEt 50 PCS", and "SEt 100 PCS."

(8) Display the number of pieces you wish to set and press the →O/T← key.

(9) "SEt" is displayed for several seconds and the number of pieces is displayed.

10.3 Solid Specific Gravity

Solid specific gravity is calculated by measuring the mass of a solid sample in the air and in a liquid of known specific gravity. The unit for solid specific gravity is " , d."

Procedure

(1) Install the optional specific gravity measurement kit, SMK-301.

(2) Register the solid specific gravity unit.
☞ See Section ***10. "REGISTRATION, RELEASE, AND SELECTION OF MEASUREMENT UNITS."***

(3) Set the specific gravity of the liquid.
☞ See Section ***23. "SOLVENT SPECIFIC GRAVITY FOR SOLID SPECIFIC GRAVITY MEASUREMENT."***

(4) Press the UNIT key from the mass display to select "d". While measuring the mass in the air, the g unit is also illuminated.

(5) Press the →O/T← key.

(6) Place the sample on the upper pan.

(7) When stability symbol illuminates, press the CAL/MENU key.

(8) Next, place the sample on the pan in the liquid. Ensure that the entire sample is immersed in the liquid. The display indicates the specific gravity of sample.

(9) Start the measurement of the next sample from step (5).

10.4 Liquid Specific Gravity

Liquid specific gravity is calculated using values obtained by measuring the weight of the sinker (solid of known volume) in the air and in the sample liquid. The display unit for liquid specific gravity is "d."

Procedure

(1) Place the optional liquid sample sinker in a tank containing the sample liquid.

(2) Register the liquid specific gravity unit.

☞ See Section ***10. "REGISTRATION, RELEASE, AND SELECTION OF MEASUREMENT UNITS."***

(3) Set the sinker volume for the measurement of liquid specific gravity.

(4) ☞ See Section ***24. "SINKER VOLUME FOR LIQUID SPECIFIC GRAVITY MEASUREMENT."***

(5) Press the UNIT key from the mass display and select "d". While measuring the mass of the sinker in the air, the g unit is also illuminated.

(6) Press the →O/T← key.

(7) Place the sinker on the upper pan of the optional SMK-301.

(8) Press the CAL/MENU key when stability symbol illuminates.

(9) Next, place the sinker on the pan in the liquid. The display indicates the specific gravity of the sample.

(10) Start the measurement of the next sample from step (5).

11. AUTO PRINT

By setting Auto PRINT, after the displayed value is stabilized, it is output from DATA I/O and RS232C connector. After that, the displayed value is output whenever it is stabilized even if a different sample is loaded.

After the gram-display of the balance falls within ±5 counts of zero, the displayed value is printed the next time a sample that weights more than 10 counts is loaded and the display is stabilized. Unload the first sample and allow the display to return to zero ±3 counts before loading the next sample.

Regardless of the unit displayed, 1 count is equivalent to 0.1 mg.

Procedure

(1) Press the CAL/MENU key several times from the mass display. When "FUnC.SEL" is displayed, press the →O/T← key.

(2) Press the CAL/MENU key several times to display "AtPrt:**." The ** indicate the current setting. "on" indicates that the Auto Print function is active and "oF" indicates that the function is released.

(3) To change the settings, press the →O/T← key while "AtPrt:**" is displayed.

(4) Each time the CAL/MENU key is pressed, the display switches between "AP-oF" and "AP-on". When the current settings are displayed, the stability symbol illuminates.

(5) Press the →O/T← key to change the setting, or press the POWER/BRK key to return to "AtPrt:**" without changing the settings.

(6) Press and hold the POWER/BRK key to return to mass display.

12. ANALOG DISPLAY

The CAW/CAX/CAY series balance is equipped to display the ratio of the current weight against the maximum weighing capacity. This function is activated or released by setting it to display or not to display.

Procedure

(1) Press the CAL/MENU key several times from the mass display. When "FUnC.SEL" is displayed, press the →O/T← key.

(2) Press the CAL/MENU key several times to display "AdiSP:**." The ** indicate the current settings for the analog display. "on" indicates that the function is activated and "oF" indicates that the function is released.

(3) To change the setting, press the →O/T← key while "AdiSP:**" is displayed.

(4) Each time the CAL/MENU key is pressed, "Ad-oF" or "Ad-on" is displayed. The stability symbol illuminates when the current setting is displayed.

(5) Press the →O/T← key to change the setting, or press the POWER/BRK key to return to "AdiSP:**" without changing the settings.

(6) Press and hold the POWER/BRK key to return to the mass display.

13. ADD LOAD WEIGHING

This function displays (or prints) the individual weights and summarizes the total weight of a series of additions to the sample pan. The Addon:** function must be reset for each series of Add Load Weighing.

Auto PRINT function must be set to ON to use this function. The balance will return to the zero display automatically when the printer is attached. If a printer is not attached, press the →O/T← key to manually return the display to zero after each addition. Press the POWER/BRK to send the total weight to the printer and return to normal weighing mode.

With printer attached:

Sample weight is sent to the printer upon stabilization, followed by automatically returning to the zero display. As additional material is added to the sample, the additional weight is sent to the printer upon stabilization and the balance returns to the zero display. Press the POWER/BRK key to send the total weight to printer and return to normal weighing mode.

Without printer attached:

Auto PRINT function must be set ON to use this function. Press the →O/T← key after each addition is displayed. Press the POWER/BRK key to display total weight and return to normal weighing mode.

Reset the Addon:** function for each series of Add Load Weighing.

Procedure

(1) Press the CAL/MENU key several times from the mass display. When "FUnC.SEL" is displayed, press the →O/T← key.

(2) Press the CAL/MENU several times to display "Addon:**."

The ** indicate the current setting for the Add Load Weighing function. "on" indicates that Add Load Weighing is active and "oF" indicates that it is released.

(3) To change the setting, press the →O/T← key while "Addon:**" is displayed.

Press the CAL/MENU key to switch between "Adon-oF" and "Adon-on". The stability symbol illuminates to indicate the current setting.

(4) Press the →O/T← key to change the setting, or press the POWER/BRK key to return to "Addon:**" without changing the settings.

(5) When "Addon:**" is displayed, press and hold the POWER/BRK key to return to the mass display.

Regardless of the unit displayed, 1 count is equivalent to 0.1 mg.

14. STANDARD SPAN CALIBRATION (Sensitivity Adjustment)

There are four types of calibration available for the CAW/CAX series balances and two for the CAY series balances. These calibration types are described in Section ***7. "SPAN CALIBRATION."*** The operator sets the type of calibration that will be performed. The set calibration is the standard span calibration and appears in the Operation Menu.

Setting the Standard Span Calibration:

Procedure

(1) From the mass display, press the CAL/MENU key several times. When "SEttinG" is displayed, press the →O/T← key.

(2) When "CAL dEF" is displayed, press the →O/T← key.

(3) Press the CAL/MENU key to display the different types of span calibration. When the desired type of span calibration is displayed, press the →O/T← key to set it. This calibration type is now the standard span calibration and is displayed with the stability symbol.

- "E CAL": Span calibration using an external weight
- "E tESt": Span check using an external weight
- "i CAL": Span calibration using the built-in weight (CAW/CAX series only)
- "i tESt": Span check using the built-in weight (CAW/CAX series only)

(4) To return to mass display from "CAL dEF", press and hold the POWER/BRK key.

Executing the Standard Span Calibration:

Procedure

(1) From the mass display, press the CAL/MENU key to display the standard span calibration type.

(2) Press the →O/T← key to execute standard span calibration.

15. EXTERNAL WEIGHT VALUE FOR SPAN CALIBRATION

Procedure

(1) From the mass display, press the CAL/MENU key repeatedly until "SEttinG" is displayed, press the →O/T← key.

(2) Press the CAL/MENU key several times. When "CAL SEt" is displayed, press the →O/T← key. The [MENU] and # symbols are displayed to indicate numeric value entry. Depending on the model, 50.0000, 100.0000, 200.0000 or 300.0000 is displayed with the leftmost digit blinking.

(3) Change the blinking digit by pressing the UNIT key. Each time the UNIT key is pressed, the value changes from 1→2→ • • • →8→9→↕→1→ • • •. Press the PRINT key to confirm that value and move the blinking cursor to the next digit.

(4) Press the →O/T← key to confirm the numeric value of the external weight for span calibration or press the POWER/BRK key to return to "CAL SEt" without changing the value.

(5) When "CAL SEt" is displayed, press and hold the POWER/BRK key to return to mass display.

16. EXTERNAL WEIGHT VALUE FOR BUILT-IN WEIGHT CALIBRATION (CAW/CAX series only)

Procedure

(1) From the mass display, press the CAL/MENU key repeatedly until "SEttinG" appears, press the →O/T← key.

(2) Press the CAL/MENU key several times. When "PCAL.SEt" is displayed, press the →O/T← key. The [MENU] and # symbols are displayed to indicate numeric value entry. Depending on the model, 50.0000, 100.0000, 200.0000 or 300.0000 is displayed with the leftmost digit blinking.

(3) Change the blinking digit by pressing the UNIT key. Each time the UNIT key is pressed, the value changes from 1→2→ • • • →8→9→0→1→ • • •. Press the PRINT key to confirm that value and move the blinking cursor to the next digit.

(4) Press the →O/T← key to confirm the numeric value of the external weight for span calibration or press the POWER/BRK key to return to "PCAL.SEt" without changing the value.

(5) When "PCAL.SEt" is displayed, press and hold the POWER/BRK key to return to mass display.

17. CALIBRATION OF THE BUILT-IN WEIGHT (CAW/CAX series only)

Procedure

(1) Warm-up the balance.
See Section ***3. "WARM-UP."***

(2) Verify that the balance is level.

(3) Verify that the balance pan is empty and press the →O/T← key to zero the display.

(4) From the mass display, press the CAL/MENU key several times. When "SEttinG" is displayed, press the →O/T← key.

(5) Press the CAL/MENU key several times. When "PcAL" is displayed, press the →O/T← key. Calibration of the built-in weight is initiated.

(6) When "PcAL" is displayed, the balance verifies the zero point.

(7) When the blinking calibration mass value appears, place the correct calibration mass on the pan.

(8) When "0.0000" appears, remove the calibration mass from the pan.

(9) When "PcAL 1" is displayed, the built-in weight is automatically placed on the pan inside the balance.

(10) When "PcAL 0" is displayed, the balance verifies the zero point again.

(11) Span calibration of the built-in weight is complete when the display returns to the mass display.

18. BALANCE ID NUMBER

Procedure

(1) From the mass display, press the CAL/MENU key several times. When "SEttinG" is displayed, press the →O/T← key.

(2) Press the CAL/MENU key several times. When "id:****" is displayed, press the →O/T← key. The [MENU] and # symbols are displayed to indicate numeric value entry. "id:****" is displayed with the first digit blinking.

(3) Change the blinking digit by pressing the UNIT key. Each time the UNIT key is pressed, the value changes from 1→2→ • • • →8→9→↕→1→ • • •. Press the PRINT key to confirm that value and move the blinking cursor to the next digit.

(4) Press the →O/T← key to confirm the balance ID number, or press the POWER/BRK key to return to "id:****" without changing the value.

(5) When "id:****" is displayed, press and hold the POWER/BRK key to return to mass display.

19. OUTPUT CORRESPONDING TO GLP/GMP

Procedure

(1) Press the CAL/MENU key several times from the mass display. When "SEttinG" is displayed, press the →O/T← key.

(2) Pressing the CAL/MENU several times displays "GLP:**."

The ** indicate the current settings for output corresponding to GLP/GMP. "on" indicates that the function is active, and "oF" indicates that the function is released.

(3) Press the →O/T← key to change the setting.

(4) Each time CAL/MENU is pressed, "GLP-oF" or "GLP-on" is displayed. The current setting is displayed with the stability symbol. When the desired item is displayed, press the →O/T← key to change the setting, or press the POWER/BRK to return to "GLP:**."

(5) When "GLP:**" is displayed, press and hold the POWER/BRK key to return to the mass display.

20. AUTOMATIC SPAN CALIBRATION (PSC)(CAW series only)

When Automatic Span Calibration is selected (ACAL-on) and one of the following conditions occur, automatic span calibration is initiated.

(1) Change in the ambient temperature.

(2) Approximately 4 hours have passed since the previous span calibration.

If condition (1) or (2) occurs during STAND-BY mode, automatic span calibration is initiated when the balance is switched back to Operation mode.

Two Minute Warning

During operation, the weight symbol blinks to indicate that one of the above conditions has occurred and span calibration will start in approximately two minutes. To skip the span calibration, press the POWER/BRK key while the weight symbol is blinking.

Procedure

(1) Press the CAL/MENU key several times from the mass display. When "SEttinG" is displayed, press the →O/T← key.

(2) Pressing the CAL/MENU several times displays "ACAL:**." The ** indicate the current setting for automatic span calibration. "on" indicates that the function is active and "oF" indicates that the function is released.

(3) Press the →O/T← key to change the setting.

(4) Each time CAL/MENU is pressed, "ACAL-oF" or "ACAL-on" is displayed. The current setting is displayed with the stability symbol. When the desired item is displayed, press the →O/T← key to change the setting, or press the POWER/BRK to return to "ACAL:**."

(5) When "ACAL:**" is displayed, press and hold the POWER/BRK key to return to the mass display.

21. Clock-CAL (CAW series only)

Automatic span calibration is initiated when tCAL-on is selected and the time set at tCAL t1 - t3 in the measuring mode is reached.

Two Minute Warning

During operation, the weight symbol blinks to indicate that the above condition has occured and span calibration will start in approximately two minutes. To skip the span calibration, press the POWER/BRK key while the weight symbol is blinking.

Procedure

(1) From the mass display, press the CAL/MENU key several times. When "SEttinG" is displayed, press the →O/T← key.

(2) Press the CAL/MENU key several times to display "tCAL:**." The ** indicate the current setting for automatic span calibration. "on" indicates that the function is active and "oF" indicates that the function is turned off.

(3) Press the →O/T← key to change the setting.

(4) Each time CAL/MENU is pressed, tCAL-oF" or "tCAL-on" is displayed. The current setting is displayed with the stability symbol. When the desired item is displayed, press the →O/T← key to change the setting, or press the POWER/BRK to return to "tCAL:**."

(5) When "tCAL:**" is displayed, press and hold the POWER/BRK key to return to the mass display.

22. Clock-CAL STARTING TIME (CAW series only)

Span calibration is automatically conducted when "tCAL-on" is selected and one of the set times is reached.

Up to three separate calibration times may be entered. Use the 24-hour system to designate the hour and minute of the starting time. When all the digits are displayed as "_", the time setting is cancelled.

Procedure

(1) From the mass display, press the CAL/MENU several times. When "SEttinG" is displayed, press the →O/T← key.

(2) Press the CAL/MENU key several times. When "tCAL t1", "tCAL t2" or "tCAL t3" is displayed, press the →O/T← key. The weight, [MENU] and # symbols are displayed to indicate numeric value

entry. "HH:MM" (HH: hour, MM: min) is displayed and the leftmost digit is blinking.

(3) Change the blinking digit by pressing the UNIT key to increase the numeric value by one. The hour can be set from 00 to 23 and the minutes and seconds from 00 to 59. By setting all of the digits to "_" the time setting is cancelled. Press the PRINT key to confirm the current digit and move the blinking cursor to the next digit. Press the POWER/BRK key to complete the changes. If an illogical time is entered, "Err 20" is displayed.

(3) When "tCAL t*" is displayed, press and hold the POWER/BRK key to return to mass display.

23. SOLVENT SPECIFIC GRAVITY FOR SOLID SPECIFIC GRAVITY MEASUREMENT

Procedure

(1) From the mass display, press the CAL/MENU key several times. When "SEttinG" is displayed, press the →O/T← key.

(2) Press the CAL/MENU key several times. When "LSG SEt" is displayed, press the →O/T← key. The [MENU] and # symbols are displayed to indicate numeric value entry. "SG*.****" is displayed with the digit next to the G blinking.

(3) Change the blinking digit by pressing the UNIT key. Each time the UNIT key is pressed, the value changes from 1→2→ • • • →8→9→0→1→ • • •. Press the PRINT key to confirm that value and move the blinking cursor to the next digit.

(4) Press the →O/T← key to confirm the numeric value of the solvent specific gravity for solid specific gravity measurement or press the POWER/BRK key to return to "LSG SEt" without changing the value.

(5) When "LSG SEt" is displayed, press and hold the POWER/BRK key to return to mass display.

24. SINKER VOLUME FOR LIQUID SPECIFIC GRAVITY MEASUREMENT

Procedure

(1) From the mass display, press the CAL/MENU key several times. When "SEttinG" is displayed, press the →O/T← key.

(2) Press the CAL/MENU key several times. When "Sv SEt" is displayed, press the →O/T← key. The [MENU] and # symbols are displayed to indicate numeric value entry. "***.****" is displayed with the leftmost digit blinking.

(3) Change the blinking digit by pressing the UNIT key. Each time the UNIT key is pressed, the value changes from 1→2→ • • • →8→9→ǂ→⇨→1→ • • •. Press the PRINT key to confirm that value and move the blinking cursor to the next digit.

(4) Press the →O/T← key to confirm the numeric value of the sinker volume for liquid specific gravity measurement or press the POWER/BRK key to return to "Sv SEt" without changing the value.

(5) When "Sv SEt" is displayed, press and hold the POWER/BRK key to return mass display.

25. DATE (CAW/CAX series only)

Procedure

(1) From the mass display, press the CAL/MENU key several times. When "SEttinG" is displayed, press the →O/T← key.

(2) Press the CAL/MENU key several times. "d-MM.DD" is displayed with MM and DD indicating the month and day of the currently set date.

(3) To change the date, press the →O/T← key while "d-MM.DD" is displayed. The [MENU] and # symbols are displayed to indicate numeric value entry. The currently set date is displayed as "YY.MM.DD" with YY indicating the year, MM indicating the month, and DD indicating the day of the month. The leftmost digit is blinking.

(4) Change the blinking digit by pressing the UNIT key to increase the numeric value by one. The year can be set from 00 to 99, the month from 01 to 12 and 01 to 31 for the day of the month. Illogical month and day entries are prevented automatically.

(5) Press the PRINT key to confirm the current digit and move the blinking cursor to the next digit or press the →O/T← key to complete the changes.

(6) When "d-MM.DD" is displayed, press and hold the POWER/BRK key to return to mass display.

26. TIME (CAW/CAX series only)

The time can be changed by ±30 second increments or by entering the time completely. Choose the appropriate function according to the amount of time correction required.

Adjustment by ±30 Second Increments

(1) From the mass display, press the CAL/MENU several times. When "SEttinG" is displayed, press the →O/T← key.

(2) Press the CAL/MENU key several times to display "t-HH:MM." HH indicates the hour and MM the minutes of the current time.

(3) To change the time, press the →O/T← key when "t-HH:MM" is displayed.

(4) Press the →O/T← key when "SEC AdJ" is displayed.

(5) Press the →O/T← key to set the seconds value to 00. If the seconds value was 00 to 29 when the →O/T← key was pressed, 00 sec is set, and if the seconds value was 30 to 59, the minute is rounded up by one digit and the seconds value is set to 00.

(6) Press and hold the POWER/BRK key to return to mass display.

Entering the Time

(1) From the mass display, press the CAL/MENU several times. When "SEttinG" is diplayed, press the →O/T← key.

(2) Press the CAL/MENU key several times to display "t-HH:MM." HH indicates the hour and MM the minutes of the current time.

(3) To change the time, press the →O/T← key when "t-HH:MM" is displayed.

(4) Press the CAL/MENU key. When "tm.AdJ" is displayed, press the →O/T← key. The [MENU] and # symbols are displayed to indicate numeric value entry. The currently set time is displayed as "HH: MM: SS", where HH indicates the hour, MM indicates the minutes, and SS indicates the seconds, with the leftmost digit blinking.

(5) Change the blinking digit by pressing the UNIT key to increase the numeric value by one. The hour can be set from 00 to 23 and the minute and second from 00 to 59. Press the PRINT key to confirm the current digit and move the blinking cursor to the next digit.

(6) Press the →O/T← key to complete the changes.

(7) Press and hold the POWER/BRK key to return to the mass display.

27. PRINTING THE DATE & TIME (CAW/CAX series only)

It is possible to set the balance to send the date and time to a peripheral device such as a printer. This records the date and time of the internal clock on the span calibration record.

Procedure

(1) Press the CAL/MENU key several times from the mass display. When "SEttinG" is displayed, press the →O/T← key.

(2) Press the CAL/MENU several times to display "Prtdt:**." The ** indicate the current setting for date and time printing. "on" indicates that the function is active and "oF" indicates that the function is released.

(3) To change the setting, press the →O/T← key while "Prtdt:**" is displayed.

(4) Each time the CAL/MENU key is pressed the display switches between "Prtdt-oF" and "Prtdt-on".

(5) Press the →O/T← key to change the setting or press the POWER/BRK key to return to "Prtdt:**" without changing the setting.

(6) Press and hold the POWER/BRK key while "Prtdt:**" is displayed, to return to mass display.

28. PERFORMANCE CHECK

Performance checks should be conducted in an environment where the room temperature is stable at around 25°C. Use these performance checks to determine whether the balance is operating properly.

Preparation

- Verify that the balance is warmed-up. ☞ See Section ***3. "WARM-UP."***
- Set the following measuring conditions:
  - Stnd (Standard mode)
  - b-1 (Stability detection band 1 count)
  - trC-oF (Zero tracking OFF)

Repeatability

(1) Load and unload a weight that is close to the weighing capacity of the balance 10 times. Load the weight on the center of the pan and record the values described below.
Xi: Displayed value when the weight is loaded.
Yi: Displayed value when the weight is unloaded.

(2) Determine the standard deviations, σx and σy according to the formula to the right.

(3) Balance operation is normal if the values of both σx and σy are less than 1.5 times the standard deviation specified in Section ***31. "SPECIFICATIONS."***

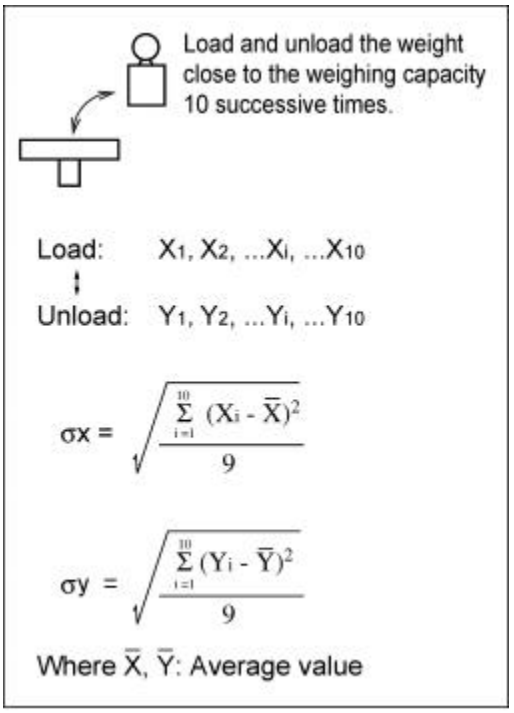

Corner Load Error

(Off center error or Eccentric error)

(1) Prepare a sample that weighs approximately 1/4 of the balance capacity and shift it on the pan in the order shown in the figure to the right. Record the results of 1 through 5 in this order.

(2) If the difference (corner load error) between readings at the center position and the off center positions is less than 5 counts, the balance operation is normal.

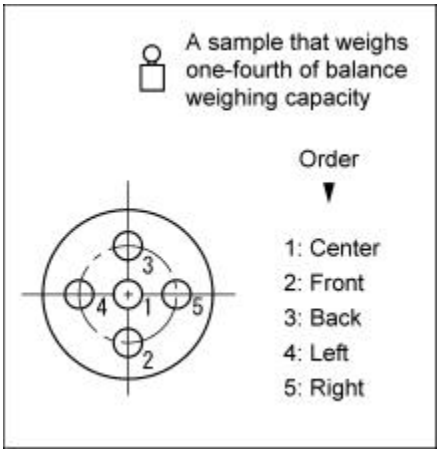

29. MAINTENANCE

Cleaning the balance:

- Use a soft cloth containing a neutral detergent to clean the balance.
- Avoid using organic solvents, chemicals, or dusting sprays as they may damage the coatings of the balance or display panel.
- The pan can be removed and washed with water. Verify that the pan is completely dry before replacing it on the balance.

30. TROUBLESHOOTING

Items identified by [S] may require factory service. Please contact your CAS corporation representative if these problems occur.

When	Trouble	• Cause → Countermeasure
Before measurement	Nothing appears on the display.	• AC adaptor is disconnected. • The power supply is turned OFF.
During measurement	• Display fluctuates. • The stability symbol does not light easily. • Poor repeatability of measured values. • Weighed values deviate from known values. • CALd is frequently displayed.	• The balance is exposed to vibration or drafts. → Change the installation site. → Change the average time and stability detection band. • Volatile sample. → Put a lid on the sample before weighing it. • Sample is charged. → Put the sample in a metallic container and then weight it. → When weighing a plastic disk etc., place a sheet of metal larger than the sample on the pan, and then, weigh the sample. • The temperature of the sample is higher or lower than that of the weighing chamber. → Make the temperature of the sample equivalent to that of the weighing chamber. → Set the balance to the High Stability mode. • The balance is exposed to electric noise or strong electromagnetic wave. → Separate the balance and the noise source. • The balance is exposed to air currents or there are air convections in the weighing chamber. → When the balance is not in use, keep the door of the weighing chamber open about 1 to 2mm. • Mechanical damage. → [S]
	• The balance frequently enters automatic span calibration.	• Extreme variation in room temperature or the temperature of unit body. → Relocate the balance to a location with little temperature variation.

	• Error such as ERR0x is displayed.	• Hardware failure. → [S]
During measurement	• Err20 is displayed.	• The numeric value entered is incorrect. • The user has attempted to release a registered unit and the software will not allow it. → It is displayed when only one unit is registered or only the ratio measurement unit is registered.
	• Err24 is displayed.	• Low battery pack voltage. → Charge the battery pack.
	• Display such as t␣to␣10 appeas.	• Command code for adjustment is being entered. → Disconnect the power supply cable. Wait about 10seconds and reconnect. If this display is left on the balance for more than 24 hours, it may not be possible to perform correct measurement.
	• The data cannot be transmitted to or received from the peripheral units.	• Communication parameter is incorrect. → ☞ See Section ***35. "INPUT AND OUTPUT DATA FORMAT."***
During span calibration	• CAL E2 is displayed.	• Something is being placed on the pan during span calibration. → Unload it and wait for span calibration to restart.
	• CAL E3 is displayed.	• The reference weight loaded during calibration of the built-in weight is incorrect. → ☞ See Section ***17. "CALIBRATION OF THE BUILT IN WEIGHT."***
	• CAL E4 is displayed.	• The internal parts of the balance require service. → [S]

30.1 Error Message

Items identified by [S] may require factory service. Please contact your CAS corporation representative if these error messages are displayed.

Error Message	Description	Corrective Action
CAL E2	Zero point deviates largely during span calibration.	Empty the pan.
CAL E3	Large deviation during PCAL.	Use the correct calibration mass.
CAL E4	Sensitivity deviates largely during span calibration.	Use the correct calibration mass.
CHE x	The balance stops at this display.	→ [S]
Err 0x	The internal parts of the balance require service.	→ [S]
Err 20	An incorrect value has been entered.	Review the entered numeric value.
Err21	Required conditions and numeric values are not set.	Check the analog display mode.
Err24	The balance cannot store settings due to abnormal power supply voltage.	Check the power supply voltage.

31. SPECIFICATIONS

Model	CAW320	CAW220	CAW120	CAX200
Weighing capacity	320g	220g	120g	200g
Minimum display	0.1mg			
Standard deviation σ	σ ≤0.15mg	σ ≤0.1mg		
Linearity	±0.3mg	±0.2mg		
External weight value for calibration (recommended value)	300g	200g	100g	200g
Pan diameter (mm)	ϕ80mm			
Main unit dimension	216×315×330			
Main unit weight	Approx. 7kg			
Stability of sensitivity (10°C to 30°C)	±2ppm: When PSC is ON. ±2ppm/°C: When PSC is OFF.			±2ppm/°C
Operating temperature range	±5 to 40°C			
Power supply	Input : 100-250VAC, 47-63Hz, 0.3A/Output : 12VDC, 1A			

Model	CAX120	CAY220	CAY120
Weighing capacity	120g	220g	120g
Minimum display	0.1mg		
Standard deviation σ	σ ≤0.1mg		
Linearity	±0.2mg		
External weight value for calibration (recommended value)	100g	200g	100g
Pan diameter (mm)	ϕ80mm		
Main unit dimension	216×315×330		
Main unit weight	Approx. 7kg		
Stability of sensitivity (10°C to 30°C)	±2ppm/°C		
Operating temperature range	±5 to 40°C		
Power supply	Input : 100-250VAC, 47-63Hz, 0.3A/Output : 12VDC, 1A		

32. PARTS LIST

Optional Peripherals

Part Name	Part No.	Comments
Electronic Printer EP-60A	321-42008-10	Including AC adaptor for 100V
Electronic Printer EP-60A	321-42008-20	Including AC adaptor for 100~250V
Electronic Printer EP-60A	321-42008-90	Without AC adaptor
RS232C Cable 25P-9S (1.5 m)	321-60754-01	For IBM-PC/AT, DOS/V (Null modem type)
RS-232C Cable 25P-25P (1.5 m)	321-60753-01	For some models of NEC PC-98 series (IEEE standard size) (Null modem type)
Specific gravity weighing kit	321-60550	

Maintenance Parts

Part name	Part No.	Remarks
Pan	321-60453	
Pan supporter	321-60459	Including cushion
Anti-drift ring	321-41205	
AC adaptor	074-83004-01	
Level screw	321-53530-30	
Glass door ASSY, right	321-60445	Including the knob
Glass door ASSY, left	321-60444	Including the knob
Glass door ASSY, upper	321-60468	Including the knob
Front glass	321-60430	

33. USING PERIPHERAL UNITS

Electronic Printer EP-60A

Procedure

(1) Set the communication format of the balance to "intFACE-iF:F1."

(2) Disconnect the balance power cable, then connect the electronic printer to the DATA I/O connector provided on the back of the balance.

(3) ☞ For the details, see the ***Instruction Manual for the Electronic Printer EP-60A.***

34. Windows® DIRECT FUNCTION

With CAW, CAX, and CAY series balances, data can be directly transferred to a PC enabling the displayed values to appear in the application software of Windows* such as LOTUS 1-2-3 and MS-Excel just as if they were entered from the keyboard.

> Read the final section of this manual before making these settings in Windows® 95.

Procedure

Carefully follow the procedure below.

(1) Turn ON the balance and set the balance communication parameter to intFACE - iF:win.

(2) Press and hold the POWER/BRK key to escape from menu selection.

(3) Turn OFF the power supplies to the PC and the balance.

(4) Connect the PC and the balance with the RS-232C cable.

(5) Turn ON the PC only and activate Windows*.

(6) Select "Start" → "Setting" → "Control Panel" → "Accessibility Options."

(7) Confirm that there are no check marks next to any items on any of the tabs including "General."

(8) Place a check mark on "Support serial key devices" in the "General" tab. This will be the only checked item in “Accessibility Options”.

(9) Open "Setting."

(10) Select a serial port applicable to the RS-232C port of your PC. One of COM 1 to 4.

(11) Select 300 for "baud rate."

(12) Select "OK."

(13) Select "Update."

(14) Select "Start" → "Shut Down" → "Restart the computer."

(15) After Windows* is fully activated, plug the AC adapter into the balance power outlet and turn ON the balance.

This completes the setting. It is not necessary to repeat the above settings each time the balance is used.

Checking the Operation

(1) Open "Note Pad" (or similar application) provided with Windows*.

(2) Every time the PRINT key is pressed, confirm that the numeric values displayed on the balance appear on the PC screen.

(3) To end the application, follow the normal end procedure.

Windows* = Windows®95, Windows®98, Windows®Me, Windows®2000

Activate Windows by the following procedure the next time. This ensures correct operation.

Procedure

(1) Disconnect the balance power supply.

(2) Activate Windows* and wait until activation is complete.

(3) Plug the AC adapter into the outlet and turn ON the balance.

Note:

Turning ON the balance before Windows* is completely activated may cause incorrect operation.

Note:

- This function may not operate on a PC on which a normal U.S. version of Microsoft Windows* does not operate. Some types of personal computers may not be able to use this function or some features may be limited. CAS does not guarantee that this function can be used on all the PCs without any problems currently or in the future.
- CAS is not liable for any direct or indirect problems caused by this function. It is recommended that important data or programs on your PC be backed-up before using this function. For the operation of Windows* or the PC, refer to commercial tutorials or the appropriate instruction manual.
- It is necessary to have the "Accessibility Options" function of Windows* installed on the PC. To install "Accessibility Options", select "Start" → "Setting" → "Control panel" → "Add /Remove Programs" and open the "Windows Setup" tag. Place a check mark on "Accessibility Options." For more information, see the Windows* instruction manual.
- Once the serial key device is made effective, software which uses the RS-232C port on that PC does not operate correctly, unless it is made ineffective again. If an external modem, plotter or etc. is connected, remove the check mark placed on "Using the serial key device" and re-activate the OS after connection to the balance is terminated.

When the Function Does Not Operate At All:

- For some notebook PCs, it is possible to exclude the RS-232C port for energy saving purposes. Set the PC so that the RS-232C port can be used.
- Change the settings of COM 1 to 4. Re-start Windows* after the changes are complete.
- Verify that the correct RS-232C cable is being used.

Windows* = Windows®95, Windows®98, Windows®Me, Windows®2000

When the Function Intermittently Malfunctions:

- Use a communication speed of 300 bps. Depending on the processing ability of the PC, this function may operate incorrectly if communication speed is too high.
- Send the next data only after the current one is displayed on the screen. Depending on the processing ability of the PC, this function may operate incorrectly if interval of data transmission is too short.
- Do not touch the keyboard or the mouse while the balance is transmitting data.
  Stop the data transmission and confirm that no data is entering the PC before touching the keyboard or the mouse.
- This operation may be incorrect when the displayed value is not a weight value (i.e. error code or time).
- The unit designation is not transmitted.
- This function may operate incorrectly depending on the settings of various lock keys of the keyboard such as the NUMLOCK or cursor key lock. Change the state of the lock and function keys on the PC keyboard.
- The peripheral devices connected to the DATA I/O such as Electric Printer EP-50 cannot be used with this function.
- When this function is used, a command cannot be sent from the peripheral device to the balance.
- Set the data formats, such as decimal places and units, in each application.

35. INPUT AND OUTPUT DATA FORMAT

In the following description, . indicates space and [DL] indicates delimiter.

Input Data

[Command Code] + [DL]

☞ See Section ***36. "COMMAND CODE."***

Output Data

- At mass display:

  S-200.0000g.[DL]*

  S-200.0000 [0] g.[DL]*

  Polarity positive space (.)
  negative minus(-)

  Stability information
  (available to output with stability information)
  Stable S
  Unstable U

- When oL or-oL is displayed:

  U-... oL...[DL]

  Polarity positive space ( )
  negative minus(-)

  Stability information
  (available to output with stability information)
  Stable S
  Unstable U

Data Format

- ASCII (JIS) code
- The baud rate, parity (and bit length), delimiter, stop bit, format, and handshake are changed by menu selection.

36. COMMAND CODE

The following commands are available when the balance is connected to a peripheral device.

☞ For data format, see Section ***35.*** "***INPUTANDOUTPUDATAFORMAT.***"



If characters or control codes not described here are entered, normal operation of the balance and correct weighing may be compromised. If characters or control codes not described here are entered by mistake, disconnect the power supply cable. Wait about 10 seconds and reconnect it.

Command code	Function	Contents
D01	Continuous output	The balance data is continuously output at approximately every 230ms.
D05	One time output	Equivalent to the PRINT key.
D06	Automatic print	☞ See Section ***11.*** "***AUTO PRINT.***"
D07	One time output with stability information	S or U is output with the data to indicate the stability state when the measurement was taken. S: Indicates the stability symbol was illuminated. U: Indicates the stability symbol was not illuminated.
D08	One time output at the stable state	After the stability symbol is illuminated and the command is entered, data is output.
D09	Output stop	Releases the automatic print and continuous output functions.
Q	ON/OFF selection	Selection of STAND-BY state and measuring state.
T	Taring	Equivalent to the →O/T← key
TS	Waiting for stability Taring	Taring is conducted at the first stable state after the command is entered.
CAL or C18	Span calibration	Initiates Span Calibration
+	Add Load Weighing	☞ See Section ***13.*** "***ADD LOAD WEIGHING.***"
R	Total reset	End/Release of various application weighing
g	g unit registration	☞ See Section ***10.*** "***REGISTRATION, RELEASE, AND SELECTION OF MEASUREMENT UNIT.***"
mg	mg unit registration	
PERCENT	% unit registration	
PCS	"Number of pieces" registration	
CT	"Carat" registration	

Command code	Function	Contents
MOM	"Momme" registration	☞ See Section ***10.*** "***REGISTRATION, RELEASE, AND SELECTION OF MEASUREMENT UNIT.***"
SDENSE	"Solid specific gravity" registration	
LDENSE	"Liquid specific gravity" registration	
%	100 % setting	
G	g/% selection	
-g	"g" registration release	
-mg	"mg" registration release	
-PERCENT	"%" registration release	
-PCS	"Number of pieces" registration release	
-CT	"Carat" registration and release	
-MOM	"Momme" registration release	
-SDENSE	"Solid specific gravity" registration release	
-LDENSE	"Liquid specific gravity" registration release	
C02	High Stability mode setting	Hi-Stb mode SAmPLE mode Stnd mode ☞ See Section ***6.1*** "***Menu Display when Func.SEL is Selected.***"
C13	Sample Pouring mode setting	
C14	Standard setting	
C05	Stability detection baud 0.1 mg	
C06	Stability detection baud 0.5 mg	
C15	Stability detection baud 1.0 mg	
C07	Performs zero tracking	
C08	Not perform zero tracking	
C10	Performs automatic span calibration	
C11	Does not perform automatic span calibration	
C17	Setting condition check	The measuring conditions currently set by menu selection are output in abbreviation.

37. CONFIGURATION DIAGRAM OF PERIPHERAL UNITS

