ENGINE	STD	OPT
Cummins QSB 6.7 engine	●	
HYDRAULIC SYSTEM		
Intelligent Power Control (IPC)		
3-power mode, 2-work mode, user mode	●	
Variable Power Control	●	
Pump Flow Control	●	
Attachment Mode Flow Control		●
Engine Auto Idle	●	
Engine Auto Shutdown Control		●
Electronic Fan Control	●	
CAB & INTERIOR		
ISO Standard cabin		
Rise-up type windshield wiper	●	
Radio / USB player	●	
Handsfree mobile phone system with USB	●	
12 volt power outlet (24V DC to 12V DC converter)	●	
Electric horn	●	
All-weather steel cab with 360° visibility	●	
Safety glass windows	●	
Sliding fold-in front window	●	
Sliding side window(LH)	●	
Lockable door	●	
Hot & cool box	●	
Storage compartment & Ashtray	●	
Transparent cabin roof-cover	●	
Sun visor	●	
Door and cab locks, one key	●	
Mechanical suspension seat with heater	●	
Pilot-operated slidable joystick	●	
Console box height adjust system	●	
Automatic climate control		
Air conditioner & heater	●	
Defroster	●	
Starting Aid (air grid heater) for cold weather	●	
Centralized monitoring		
8" LCD display	●	
Engine speed or Trip meter/Accel.	●	
Engine coolant temperature gauge	●	
Max power	●	
Low speed/High speed	●	
Auto idle	●	
Overload	●	
Check Engine	●	
Air cleaner clogging	●	
Indicators	●	
ECO Gauges	●	
Fuel level gauge	●	
Hyd. oil temperature gauge	●	
Fuel warmer	●	
Warnings	●	
Communication error	●	
Low battery	●	
Clock	●	
Cabin lights		●
Cabin front window rain guard		●
Cabin roof-steel cover		●
Seat		
Adjustable air suspension seat with heater		●
Cabin FOPS/FOG		
FOPS (Falling Object Protective Structures) · ISO 3449 Level 2		●
FOG (Falling Object Guard)		●
Cabin ROPS (ISO 12117-2)		
ROPS (Roll Over Protective Structure)	●	

SAFETY	STD	OPT
Battery master switch	●	
Rearview camera		●
AAVM (Advanced Around View Monitoring)		●
Four front working lights	●	
Travel alarm		●
Rear work lamp		●
Beacon lamp		●
Automatic swing brake	●	
Boom holding system	●	
Arm holding system	●	
Safety lock valve for boom cylinder with overload warning device		●
Safety lock valve for arm cylinder		●
Swing Lock System		●
Three outside rearview mirror	●	
OTHER		
Booms		
5.85 m, 19' 2"	●	
Arms		
2.1 m, 6' 11"		●
2.5 m, 8' 2"		●
3.05 m, 10' 0"	●	
3.60 m, 11' 10"		●
Removable clean-out dust net for cooler	●	
Removable reservoir tank	●	
Fuel pre-filter	●	
Fuel warmer		●
Self-diagnostics system	●	
Hi-mate (Remote Management System)		●
Batteries (2 x 12V x 100 AH)	●	
Fuel filler pump (50 L/min)		●
Single-acting piping kit (breaker, etc.)		●
Double-acting piping kit (clamshell, etc.)		●
Rotating Piping Kit		●
Quick coupler piping		●
Quick coupler		●
Boom floating control		●
One Pedal Straight Travel System		●
Accumulator for lowering work equipment	●	
Pattern change valve (2 patterns)		●
Fine Swing Control System		●
Tool kit		●
UNDERCARRIAGE		
Lower frame under cover (Additional)		●
Lower frame under cover (Normal)	●	
Track shoes		
Triple grousers shoes (600mm, 24")	●	
Triple grousers shoe (700mm, 28")		●
Triple grousers shoe (800mm, 32")		●
Triple grousers shoe (900mm, 36")		●
Double grousers shoe (700mm, 28")		●
Track rail guard	●	
Full track rail guard		●

* Standard and optional equipment may vary. Contact your Hyundai dealer for more information. The machine may vary according to International standards.
* The photos may include attachments and optional equipment that are not available in your area.
* Materials and specifications are subject to change without advance notice.
* All imperial measurements rounded off to the nearest pound or inch.

HYUNDAI HEAVY INDUSTRIES | CONSTRUCTION EQUIPMENT

Head Office (Sales Office)
18TH FI., DIGITAL CUBE BLDG. 34, SANGAMSAN-RO, MAPO-GU, SEOUL 121-904, KOREA
TEL: (82) (2) 6424–1118 **FAX**: (82) (2) 6424-1129

Americas Operation : Hyundai Construction Equipment Americas, Inc.
6100 ATLANTIC BOULEVARD NORCROSS GA 30071 U.S.A
TEL: (1) 847-678-823-7802 **FAX**: (1) 847-678-823-7778

Europe Operation : Hyundai Heavy Industries Europe N.V.
VOSSENDAAL 11, 2440 GEEL, BELGIUM
TEL: (32) 14-56-2200 **FAX**: (32) 14-59-3405

PLEASE CONTACT

www.hyundai-ce.com 2015. 12 Rev.1

MOVING YOU FURTHER

HX260 L

With Tier4 final / Stage Ⅳ Engine installed



*Photo may include optional equipment.

Net Power	Gross Power	Travel Speed	Operating Weight
SAE J1349 / 179 HP (133 kW) at 1,950 rpm	SAE J1995 / 190 HP (142 kW) at 1,950 rpm	5.8 km/hr (3.60 mph) / 3.4 km/hr (2.11 mph)	25,600 kg / 56,440 lb

HYUNDAI HEAVY INDUSTRIES





RULE THE GROUND

The HX Series excavators are products of HHI's spirit of initiative, creativity, and strong drive. HHI's engineers, who are the best in the industry, have worked tirelessly to offer a zero-defect product. The new HX Series reflects customers' needs in the field gleaned by thorough monitoring. They maximize fuel efficiency and performance proven by rigorous field tests and quality control.









*Photo may include optional equipment.

RULE THE GROUND

The HX series exceeds customer's expectation!
Become a true leader on the ground with HHI's HX series.

HX260L

WORK MAX, WORTH MAX

- ECO Gauge
- IPC (Intelligent Power Control)
- New Variable Power Control
- Electronic Viscous Fan Clutch
- Attachment Flow Control (Option)
- New Cooling System with Increased Air Flow
- Enlarged Air Inlet with Grill Cover
- One Pedal Straight Travel (Option)
- Cycle Time Improvement
- Boom Floating Control (Option)

MORE RELIABLE, MORE SUSTAINABLE

- Durable Cooling Module
- Reinforced Pin, Bush, and Polymer Shim
- Reinforced Durability of Upper and Lower Structure and Attachments
- Wear Resistant Cover Plate
- Hi-grade (High-pressure) Hoses

INFOTAINMENT FRONTIER

- Intelligent and Wide Cluster
- Haptic Control
- Operating Simulation for Joy & Achievement
- Wi-Fi Direct with Smart Phone (Miracast)
- Proportional Auxiliary Hydraulic System
- New Audio System
- New Air Conditioning System



MODERN COMFORT, SIMPLE AND SAFE SOLUTION

- AAVM (Advanced Around View Monitoring) Camera System (Option)
- Easy Access to DEF/AdBlue® Supply System
- Hi-mate (Remote Management System) (Option)
- Cab Suspension Mount
- Swing Lock System (Option)
- Fine Swing Control (Option)

*Photo may include optional equipment.



*Photo may include optional equipment.

Cycle Time Improvement

The HX Series provides higher productivity on the site by faster operation: it loads trucks up to 6% faster and levels up to 5% faster than the 9 Series.

Boom Floating Control (Option)

In order to achieve efficient leveling work by arm-in and arm-out operation with the boom fixed, the HX Series applies boom floating control, allowing stable operation even in high-load work.

WORK MAX, WORTH MAX

Fuel Efficient System, Allows Great Performance

The HX Series has an eco-friendly, high-performance engine which ensures both excellent fuel efficiency and high power. With outstanding operating performance proven by rigorous tests at various work sites, it will satisfy any customer's needs.



ECO Gauge

Eco Gauge enable economic operation of machines. The gauge level and color displays engine torque and fuel efficiency level. On top of that, the status of fuel consumption such as average rate and the total amount of fuel consumed are displayed. Hourly and daily based fuel consumption can be checked in the detailed menu as well.



IPC (Intelligent Power Control)

The IPC controls Power depending on work environments. Its mode can be selected and released on the monitor. On the excavation mode, pump flow can be easily controlled by a lever, reducing fuel consumption.

New Variable Power Control

The HX Series minimizes equipment input and output control signals to improve fuel efficiency. Its three-stage Power mode ensures the highest performance in any operating environment.

* P(power) mode: Maximizes speed and power of the equipment for heavy load work.
* S(standard) mode: Optimizes performance and fuel efficiency of the equipment for general load work.
* E(economy) mode: Improves the control system for light load work.

Electronic Viscous Fan Clutch

The electronic fan clutch reduces noise during operation by precisely controlling RPM depending on the hydraulic oil and coolant temperature of the working vehicle, and minimizes fuel consumption. It is also possible to shorten the warm up time of hydraulic oil.



Attachment Flow Control (Option)

The HX Series improves pump flow rate by independent control of two pumps. It optimizes attachments for effective flow rate setting depending on attachments (ten breaker types and ten crusher types), enabling various operations matching the site environments.



New Cooling System with Increased Air Flow

With the three-floor stacked cooling module improving air inflow, the HX Series provides excellent cooling performance by increasing heat dissipation and can be easily cleaned.

Enlarged Air Inlet with Grill Cover

Enlarged vent hole of the air inlet side cover and fine net grill to prevent penetration of foreign materials further improve durability.

One Pedal Straight Travel (Option)

One Pedal Straight Travel (Option) is available for customers' convenience when long distance traveling or combination of attachment work with traveling is necessary.

MORE RELIABLE, MORE SUSTAINABLE

New Exterior Design for Robustness and Safety

The true value of the HX Series lies in its durability. The robust upper and lower frame structure that can endure external shock and high-load work and the attachments whose performance was proven by rigorous tests further show the real value of the HX Series in tough working environments and promise higher productivity.



Durable Cooling Module

The HX Series has a durable cooling module that passed stringent tests, demonstrating the highest productivity in tough working environments.



Reinforced Pin, Bush, and Polymer Shim

The HX series improves lubricity of connecting parts between the equipment and attachments. Gaps with attachments are minimized by wear-resistant long-life pins, bushes, and polymer shims, supporting the highest performance with invariable durability.



Reinforced Durability of Upper and Lower Structure and Attachments

The upper and lower structure and attachments of the HX Series have higher durability than demanded on the site, as proven through numerous tests including road tests and virtual simulation. The wear resistance of the bucket has been improved by use of new material.

Wear Resistant Cover Plate

A wear-resistant cover plate is installed at the end of the arm to minimize abrasion on the connector between the arm and the bucket. Reduction of vibration of the buckets enables more stable operation even in high-load work.



*Photo may include optional equipment.

Hi-grade (High-pressure) Hoses

The HX Series uses high-pressure hoses with improved heat and pressure resistance, greatly increasing the durability of the equipment.



*Photo may include optional equipment.

New Air Conditioning System

With further improved air conditioning and heating, the HX Series increases the APTC capacity by 15% to provide a pleasant environment for operators all the time. The ventilation was designed such that warm and cool air even reach operators' faces (increasing their work satisfaction) or allowing pleasant working environment.

INFOTAINMENT FRONTIER

Enhanced Instrument Panel for Easier Monitoring

Many electronic functions are concentrated on the most convenient spot for operators to ensure work efficiency. The highly-advanced infotainment system, a product of HHI's intensive information technology, enables both productivity and pleasant work at the same time! The HX Series of HHI provides higher value and pleasure to customers.



Intelligent and Wide Cluster

The 8-inch capacitive-type display (like smartphone display) of the HX Series is 15% larger than the previous model, delivering excellent legibility. The centralized switches on the display allow convenience of checking the urea level and temperature outside the cabin. The audio AUX, air conditioner, heater interoperation, wiper, lamp, overload warning, travel, alarm and inclination sensor also maximize operator's convenience.



Haptic Control

The integrated jog shuttle-type haptic controller applies to the accelerator, remote air conditioner controller, and operate cluster, allowing convenient operation. In the event of failure of the haptic switch, the emergency mode is activated on the cluster to ensure fail-safe function.

Wi-Fi Direct with Smart Phone (Miracast)

The Miracast system based on Wi-Fi of the operator's smart phone enables easy and convenient use of various features of the smart phone on the big screen including navigation, web surfing, viewing of videos, and listening to music. (For Android mobile phone now)

Proportional Auxiliary Hydraulic System

- Opt: Proportional control switch for better speed control
- Enlarge the operation convenience



Operating Simulation for Joy & Achievement

The operating game developed by HHI's state-of-the-art information technology allows operators to experience efficient operating state by simulation, providing fun and economy of operation.



New Audio System

Radio player, USB-based MP3 player, integrated Bluetooth hands-free feature, and built-in microphone allow convenient phone calls while in work and in transit. The radio player was moved to the right side from the rear, allowing easier access.

MODERN COMFORT, SIMPLE AND SAFE SOLUTION

New Cabin for More Comfort

Low noise, low vibration, and ergonomic design make the cabin space more comfortable and pleasant! With focus on safety and convenience of operators, the HX Series allows rapid and safe equipment inspection anytime and anywhere, providing an optimal environment for operators to work.



AAVM (Advanced Around View Monitoring) Camera System (Option)

The HX Series has a state-of-the-art AAVM video camera system to secure field of vision for operators in all directions, thereby preventing accidents. Operators can easily check the workplace in the front and rear and to the right and left.



* AVM (Around View Monitoring): Secure field of vision in all directions by nine views including 3D bird's eye view and 2D/4CH view.
* IMOD (Intelligent Moving Object Detection): Inform when people or dangerous objects are detected within the range of operation (recognition distance: 5 m).



Easy Access to DEF/AdBlue® Supply System

The DEF/AdBlue® tank is installed inside the tool box and its inlet is remotely located for easy access and convenient supply. Warning of overfill is given by a red lamp signal. The DEF/AdBlue® supply module is attached on the side of the fuel tank for easy maintenance and filter replacement.



Hi-mate (Remote Management System) (Option)

Hi-mate, Hyundai's proprietary remote management system, provides operators and dealer service personnel access to vital service and diagnostic information on the machine from any computer with internet access. Users can pinpoint machine location using digital mapping and set machine work boundaries, reducing the need for multiple service calls. Hi-mate saves time and money for the owner and dealer by promoting preventative maintenance and reducing machine downtime.

* Operation of the system may be affected by the condition of telecommunication signal



*Photo may include optional equipment.

Cab Suspension Mount

With a low-vibration design by the coil spring and damper inside the mount, the cab suspension mount of the HX Series reduces noise inside the cabin and improves durability, providing a comfortable operation space that lessens operators' fatigue.

Swing Lock System (Option)

Swing Lock System is provided to maintain stability when swing movement needs to be limited, improving operating speed and productivity.

Fine Swing Control (Option)

Fine swing control is available for customer's convenience when users want to control fine swing.

SPECIFICATIONS

ENGINE

Maker / Model			Cummins QSB6.7
Type			4-cycle turbocharged, charger air cooled diesel engine
Rated flywheel horse power	SAE	J1995 (gross)	190 HP (142 kW) at 1,950 rpm
		J1349 (net)	179 HP (133 kW) at 1,950 rpm
	DIN	6271/1 (gross)	193 PS (142 kW) at 1,950 rpm
		6271/1 (net)	181 PS (133 kW) at 1,950 rpm
Max. torque			82.5 kgf·m (597 lbf·ft) at 1500 rpm
Bore X stroke			107×124 mm (4.21"×4.88")
Piston displacement			6700 cc (409 cu in)
Batteries			2×12V×100 Ah
Starting motor			Denso (24V-4.8 kW)
Alternator			Denso (24V-95 A)

HYDRAULIC SYSTEM

MAIN PUMP

Type	Variable displacement tandem axis piston pumps
Max. flow	2×228.2ℓ/min (60.3 U.S. gpm / 50.2 U.K. gpm)
Sub-pump for pilot circuit	Gear pump

Cross-sensing and fuel saving pump system

HYDRAULIC MOTORS

Travel	Two speed axial pistons motor with brake valve and parking brake
Swing	Axial piston motor with automatic brake

RELIEF VALVE SETTING

Implement circuits	350 kgf/cm² (4,980 psi)
Travel	350 kgf/cm² (4,980 psi)
Power boost (boom, arm, bucket)	380 kgf/cm² (5,400 psi)
Swing circuit	300 kgf/cm² (4,270 psi)
Pilot circuit	40 kgf/cm² (569 psi)
Service valve	Installed

HYDRAULIC CYLINDERS

No. of cylinder bore X stroke	Boom: Ø135×1,345 mm
	Arm: Ø145×1,620 mm
	Bucket: Ø130×1,185 mm

DRIVES & BRAKES

Drive method	Fully hydrostatic type
Drive motor	Axial piston motor, in-shoe design
Reduction system	Planetary reduction gear
Max. drawbar pull	21,100 kgf (46,500 lbf)
Max. travel speed (high / low)	5.8 km/hr (3.60 mph) / 3.4 km/hr (2.11 mph)
Gradeability	35° (70%)
Parking brake	Multi wet disc

CONTROL

Pilot pressure operated joysticks and pedals with detachable lever provide almost effortless and fatigueless operation.

Pilot control	Two joysticks with one safety lever (LH): Swing and arm, (RH):Boom and bucket (ISO)
Traveling and steering	Two levers with pedals
Engine throttle	Electric, Dial type

SWING SYSTEM

Swing motor	Fixed displacement axial piston motor
Swing reduction	Planetary gear reduction
Swing bearing lubrication	Grease-bathed
Swing brake	Multi wet disc
Swing speed	10.8 rpm

SERVICE REFILL CAPACITIES

Re-filling	liter	US gal	UK gal
Fuel tank	400	106	88
Engine coolant	40	10.6	8.8
Engine oil	23	6.1	5.1
Swing device	7	1.85	1.54
Final drive (each)	4.5	1.19	0.99
Hydraulic system (including tank)	275	90.9	60.5
Hydraulic tank	160	41.25	35.2
DEF/AdBlue®	27	7.1	5.9

UNDERCARRIAGE

The X-leg type center frame is integrally welded with reinforced box-section track frames. The undercarriage includes lubricated rollers, idlers, track adjusters with shock absorbing springs and sprockets, and a track chain with double or triple grouser shoes.

Center frame	X - leg type
Track frame	Pentagonal box type
No. of shoes on each side	51 EA
No. of carrier roller on each side	2 EA
No. of track roller on each side	9 EA
No. of rail guard on each side	2 EA

OPERATING WEIGHT (APPROXIMATE)

Operating weight, including 5,850mm (19' 2") boom, 3,050mm (10' 0") arm, SAE heaped 1.08m³ (1.41 yd³) bucket, lubricant, coolant, full fuel tank, full hydraulic tank, and all standard equipments.

OPERATING WEIGHT

Shoes		Operating weight		Ground pressure
Type	Width mm (in)	kg (lb)		kgf/cm² (psi)
Triple grouser	600 (24")	HX260 L	25,600 (56,440)	0.52 (7.40)
		HX260 NL	25,500 (56,220)	0.52 (7.40)
		HX260 HW	27,850 (61,400)	0.54 (7.68)
	700 (28")	HX260 L	25,900 (57,100)	0.45 (6.40)
		HX260 HW	28,420 (62,650)	0.47 (6.69)
	800 (32")	HX260 L	26,200 (57,760)	0.40 (5.69)
		HX260 HW	28,800 (63,490)	0.42 (5.97)
	900 (36")	HX260 L	26,500 (58,420)	0.36 (5.12)
Double grouser	700 (28")	HX260 HW	29,330 (64,660)	0.49 (6.97)

BUCKET SELECTION GUIDE & DIGGING FORCE

BUCKETS



SAE heaped m³ (yd³)	1.08 (1.41) 1.27 (1.66) 1.50 (1.96)	◈1.27 (1.66)	◈1.46 (1.91)	◆1.16 (1.52)

Capacity m³ (yd³)		Width mm (in)		Weight kg (lb)	Recommendation mm (ft.in)			
					5,850 (19' 2") Boom			
SAE heaped	CECE heaped	Without side cutters	With side cutters		2,100 (6' 11") Arm	2,500 (8' 2") Arm	3,050 (10' 0") Arm	3,600 (11' 10") Arm
1.08 (1.41)	0.95 (1.24)	1,170 (46.1)	1,250 (49.2)	1,020 (2,250)	●	●	●	⊙
1.27 (1.66)	1.11 (1.45)	1,325 (52.2)	1,410 (55.5)	1,100 (2,430)	●	⊙	⊙	○
1.50 (1.96)	1.30 (1.70)	1,515 (59.6)	1,600 (63.0)	1,180 (2,600)	●	⊙	●	-
◈1.27 (1.66)	1.11 (1.45)	1,380 (54.3)	-	1,290 (2,840)	●	⊙	○	-
◈1.46 (1.91)	1.28 (1.67)	1,535 (60.4)	-	1,380 (3,040)	⊙	○	○	-
◆1.16 (1.52)	1.00 (1.31)	1,285 (50.6)	-	1,380 (3,040)	●	⊙	○	-

◈ Heavy duty bucket
◆ Rock-Heavy duty bucket

● : Applicable for materials with density of 2,000 kgf/m³ (3,370 lbf/yd³) or less
⊙ : Applicable for materials with density of 1,600 kgf/m³ (2,700 lbf/yd³) or less
○ : Applicable for materials with density of 1,100 kgf/m³ (1,850 lbf/yd³) or less

ATTACHMENT

Booms and arms are welded with a low-stress, full-box section design. 5.85 m Booms and 2.1 m, 2.5 m, 3.05 m, 3.6 m Arms are available.

DIGGING FORCE

Boom	Length	mm (ft.in)	5,850 (19' 2")				Remark
	Weight	kg (lb)	2,460 (5,420)				
Arm	Length	mm (ft.in)	2,100 (6' 11")	2,500 (8' 2")	3,050 (10' 0")	3,600 (11' 10")	
	Weight	kg (lb)	1,420 (3,130)	1,450 (3,200)	1,540 (3,400)	1,600 (3,530)	
Bucket digging force	SAE	kN	156.9 [170.4]	156.9 [170.4]	156.9 [170.4]	156.9 [170.4]	[ ] : Power Boost
		kgf	16000 [17370]	16000 [17370]	16000 [17370]	16000 [17370]	
		lbf	35270 [38290]	35270 [38290]	35270 [38290]	35270 [38290]	
	ISO	kN	178.5 [193.8]	178.5 [193.8]	178.5 [193.8]	178.5 [193.8]	
		kgf	18200 [19760]	18200 [19760]	18200 [19760]	18200 [19760]	
		lbf	40120 [43560]	40120 [43560]	40120 [43560]	40120 [43560]	
Arm crowd force	SAE	kN	134.4 [145.9]	130.4 [141.6]	114.7 [124.6]	104.0 [112.9]	
		kgf	13700 [14870]	13300 [14440]	11700 [12700]	10600 [11510]	
		lbf	30200 [32790]	29320 [31830]	25790 [28000]	23370 [25370]	
	ISO	kN	139.3 [151.2]	134.4 [145.9]	118.7 [128.8]	107.9 [117.1]	
		kgf	14200 [15420]	13700 [14870]	12100 [13140]	11000 [11940]	
		lbf	31310 [33990]	30200 [32790]	26680 [28970]	24250 [26330]	

Note : Boom weight includes arm cylinder, piping, and pin
Arm weight includes bucket cylinder, linkage, and pin

DIMENSIONS & WORKING RANGE

HX260 L / HX260 NL DIMENSIONS

5.85 m (19' 2") BOOM and 2.1 m (6' 11"), 2.5 m (8' 2"), 3.05 m (10' 0"), 3.6 m (11' 10") ARM

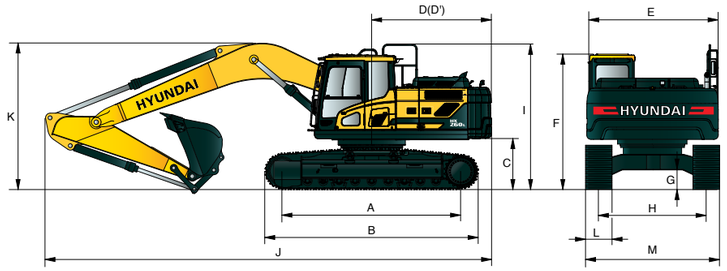

Unit : mm (ft · in)

A	Tumbler distance		3,830 (12' 7")
B	Overall length of crawler		4,640 (15' 3")
C	Ground clearance of counterweight		1,110 (3' 6")
D	Tail swing radius		2,975 (9' 9")
D'	Rear-end length		2,870 (9' 5")
E	Overall width of upperstructure		2,840 (9' 4")
F	Overall height of cab		3,050 (10' 0")
G	Min. ground clearance		480 (1' 7")
H	Track gauge	HX260 L	2,580 (8' 6")
		HX260 NL	2,380 (7' 10")
I	Overall height of guardrail		3,260 (10' 7")

	Boom length		5,850 (19' 2")			
	Arm length		2,100 (6' 11")	2,500 (8' 2")	3,050 (10' 0")	3,600 (11' 10")
J	Overall length		10,050 (33' 0")	10,000 (32' 10")	9,920 (32' 7")	9,910 (32' 6")
K	Overall height of boom		3,530 (11' 7")	3,590 (11' 9")	3,220 (10' 7")	3,590 (11' 9")
L	Track shoe width		600 (24")	700 (28")	800 (32")	900 (36")
M	Overall width	HX260 L	3,180 (10' 5")	3,280 (10' 9")	3,380 (11' 1")	3,480 (11' 5")
		HX260 NL	2,980 (9' 9")			

HX260 L / HX260 NL WORKING RANGE

Unit : mm (ft · in)

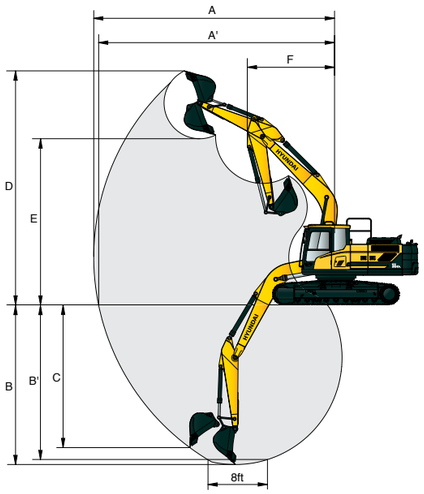

	Boom length	5,850 (19' 2")			
	Arm length	2,100 (6' 11")	2,500 (8' 2")	3,050 (10' 0")	3,600 (11' 10")
A	Max. digging reach	9,550 (31' 4")	9,870 (32' 5")	10,360 (34' 0")	10,870 (35' 8")
A'	Max. digging reach on ground	9,360 (30' 9")	9,680 (31' 9")	10,190 (33' 5")	10,700 (35' 1")
B	Max. digging depth	6,050 (19'10")	6,450 (21' 2")	7,000 (23' 0")	7,550 (24' 9")
B'	Max. digging depth (8' level)	5,840 (19' 2")	6,260 (20' 6")	6,830 (22' 5")	7,400 (24' 3")
C	Max. vertical wall digging depth	5,480 (18' 0")	5,640 (18' 6")	6,150 (20' 2")	6,830 (22' 5")
D	Max. digging height	9,450 (31' 0")	9,460 (31' 0")	9,670 (31' 9")	9,920 (32' 7")
E	Max. dumping height	6,360 (20' 10")	6,420 (21' 1")	6,630 (21' 9")	6,860 (22' 6")
F	Min. swing radius	4,420 (14' 6")	4,200 (13' 9")	3,980 (13' 1")	3,900 (12' 10")

HX260 L HIGH WALKER DIMENSIONS

5.85 m (19' 2") BOOM and 2.1 m (6' 11"), 2.5 m (8' 2"), 3.05 m (10' 0"), 3.6 m (11' 0") ARM

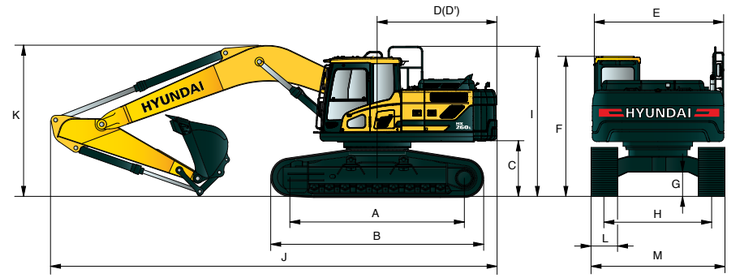

Unit : mm (ft · in)

A	Tumbler distance		4,030 (13' 3")
B	Overall length of crawler		4,940 (16' 2")
C	Ground clearance of counterweight		1,475 (4' 8")
D	Tail swing radius		2,975 (9' 9")
D'	Rear-end length		2,870 (9' 5")
E	Overall width of upperstructure		2,840 (9' 4")
F	Overall height of cab		3,420 (11' 2")
G	Min. ground clearance		765 (2' 6")
H	Track gauge		2,790 (9' 2")
I	Overall height of guardrail		3,625 (11' 9")

	Boom length		5,850 (19' 2")			
	Arm length		2,100 (6' 11")	2,500 (8' 2")	3,050 (10' 0")	3,600 (11' 10")
J	Overall length		10,060 (33' 0")	9,970 (32' 9")	9,760 (32' 0")	9,930 (32' 7")
K	Overall height of boom		3,610 (11' 10")	3,750 (12' 4")	3,240 (10' 8")	3,620 (11' 11")
L	Track shoe	Type	Triple grouser			Double grouser
		Width	600 (24")	700 (28")	800 (32")	900 (36")
M	Overall width		3,390 (11' 1")	3,490 (11' 5")	3,590 (11' 9")	3,490 (11' 5")

HX260 L HIGH WALKER WORKING RANGE

Unit : mm (ft · in)

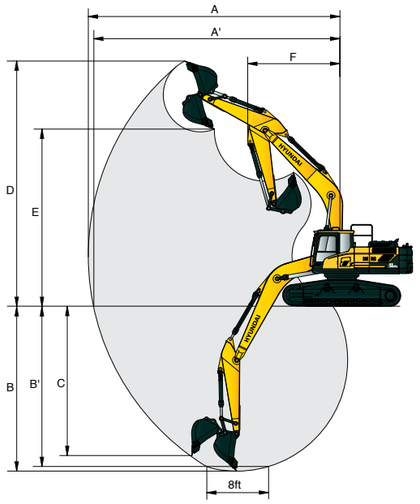

	Boom length	5,850 (19' 2")			
	Arm length	2,100 (6' 11")	2,500 (8' 2")	3,050 (10' 0")	3,600 (11' 10")
A	Max. digging reach	9,550 (31' 4")	9,870 (32' 5")	10,360 (34' 0")	10,870 (35' 8")
A'	Max. digging reach on ground	9,280 (30' 5")	9,160 (30' 1")	10,110 (33' 2")	10,360 (34' 0")
B	Max. digging depth	5,680 (18' 8")	6,080 (19' 11")	6,630 (21' 9")	7,180 (23' 7")
B'	Max. digging depth (8' level)	5,470 (17' 11")	5,890 (19' 4")	6,460 (21' 2")	7,030 (23' 1")
C	Max. vertical wall digging depth	5,120 (16' 10")	5,300 (17' 5")	5,790 (19' 0")	6,470 (21' 3")
D	Max. digging height	9,820 (32' 3")	9,840 (32' 3")	10,040 (32' 11")	10,280 (33' 9")
E	Max. dumping height	6,730 (22' 1")	6,790 (22' 3")	7,000 (23' 0")	7,220 (23' 8")
F	Min. swing radius	4,140 (13' 7")	4,030 (13' 3")	3,940 (12' 11")	3,900 (12' 10")

LIFTING CAPACITY

Rating over-front Rating over-side or 360 degree

HX260 L

5.85 m (19' 2") boom, 2.10 m (6' 11") arm equipped with 1.08 m³ (SAE heaped) bucket and 600 mm (24") triple grouser shoe.

Load point height m (ft)		Load radius								At max. reach		
		3.0 m (10 ft)		4.5 m (15 ft)		6.0 m (20 ft)		7.5 m (25 ft)		Capacity		Reach
												m (ft)
6.0 m	kg					*5710	*5710			*5160	3180	8.32
(20 ft)	lb					*12590	*12590			*11380	7010	(27.3)
4.5 m	kg			*7730	*7730	*6430	5580	*5920	3690	4510	2680	8.91
(15 ft)	lb			*17040	*17040	*14180	12300	*13050	8140	9940	5910	(29.2)
3.0 m	kg			*10170	8250	*7520	5210	5920	3540	4200	2450	9.17
(10 ft)	lb			*22420	18190	*16580	11490	13050	7800	9260	5400	(30.1)
1.5 m	kg			*12210	7570	8300	4870	5740	3370	4160	2410	9.14
(5 ft)	lb			*26920	16690	18300	10740	12650	7430	9170	5310	(30.0)
Ground	kg			*13090	7300	8050	4650	5620	3260	4410	2560	8.80
Line	lb			*28860	16090	17750	10250	12390	7190	9720	5640	(28.9)
-1.5 m	kg	*15540	15310	*13000	7280	7990	4590			5060	2970	8.13
(-5 ft)	lb	*34260	33750	*28660	16050	17610	10120			11160	6550	(26.7)
-3.0 m	kg	*17010	15630	*12000	7440	8100	4700			*6210	3970	6.98
(-10 ft)	lb	*37500	34460	*26460	16400	17860	10360			*13690	8750	(22.9)
-4.5 m	kg	*13270	*13270	*9380	7840							
(-15 ft)	lb	*29260	*29260	*20680	17280							

5.85 m (19' 2") boom, 2.50 m (8' 2") arm equipped with 1.08 m³ (SAE heaped) bucket and 600 mm (24") triple grouser shoe.

Load point height m (ft)		Load radius										At max. reach		
		1.5 m (5 ft)		3.0 m (10 ft)		4.5 m (15 ft)		6.0 m (20 ft)		7.5 m (25 ft)		Capacity		Reach
														m (ft)
6.0 m	kg											*4790	2950	8.67
(20 ft)	lb											*10560	6500	(28.4)
4.5 m	kg							*5960	5660	*5520	3740	4250	2510	9.23
(15 ft)	lb							*13140	12480	*12170	8250	9370	5530	(30.3)
3.0 m	kg					*9430	8430	*7100	5270	5950	3560	3960	2290	9.48
(10 ft)	lb					*20790	18580	*15650	11620	13120	7850	8730	5050	(31.1)
1.5 m	kg					*11660	7660	*8260	4890	5740	3370	3920	2240	9.45
(5 ft)	lb					*25710	16890	*18210	10780	12650	7430	8640	4940	(31.0)
Ground	kg					*12850	7280	8040	4640	5590	3240	4120	2360	9.13
Line	lb					*28330	16050	17730	10230	12320	7140	9080	5200	(30.0)
-1.5 m	kg			*15190	15040	*13050	7200	7930	4540	5540	3190	4670	2710	8.49
(-5 ft)	lb			*33490	33160	*28770	15870	17480	10010	12210	7030	10300	5970	(27.9)
-3.0 m	kg	*16450	*16450	*17960	15340	*12340	7310	7990	4590			5940	3520	7.41
(-10 ft)	lb	*36270	*36270	*39590	33820	*27210	16120	17610	10120			13100	7760	(24.3)
-4.5 m	kg			*14720	*14720	*10300	7630							
(-15 ft)	lb			*32450	*32450	*22710	16820							

1. Lifting capacity are based on SAE J1097 and ISO 10567.
2. Lifting capacity of the ROBEX series does not exceed 75% of tipping load with the machine on firm, level ground or 87% of full hydraulic capacity.
3. The load point is a hook (standard equipment) located on the back of the bucket.
4. (*) indicates load limited by hydraulic capacity.

Rating over-front Rating over-side or 360 degree

HX260 L

5.85 m (19' 2") boom, 3.05 m (10' 0") arm equipped with 1.08 m³ (SAE heaped) bucket and 600 mm (24") triple grouser shoe.

Load point height m (ft)		Load radius										At max. reach		
		1.5 m (5 ft)		3.0 m (10 ft)		4.5 m (15 ft)		6.0 m (20 ft)		7.5 m (25 ft)		Capacity		Reach
														m (ft)
6.0 m	kg									*3610	*3610	*4350	2610	9.22
(20 ft)	lb									*7960	*7960	*9590	5750	(30.2)
4.5 m	kg							*5240	*5240	*4950	3790	3850	2230	9.74
(15 ft)	lb							*11550	*11550	*10910	8360	8490	4920	(32.0)
3.0 m	kg			*13500	*13500	*8280	*8280	*6430	5350	*5550	3590	3590	2040	9.98
(10 ft)	lb			*29760	*29760	*18250	*18250	*14180	11790	*12240	7910	7910	4500	(32.7)
1.5 m	kg			*9550	*9550	*10740	7810	*7690	4930	5740	3370	3550	1990	9.95
(5 ft)	lb			*21050	*21050	*23680	17220	*16950	10870	12650	7430	7830	4390	(32.6)
Ground	kg			*10670	*10670	*12350	7280	8030	4610	5550	3190	3700	2070	9.65
Line	lb			*23520	*23520	*27230	16050	17700	10160	12240	7030	8160	4560	(31.7)
-1.5 m	kg	*10030	*10030	*13960	*13960	*12950	7090	7840	4450	5450	3100	4210	2340	9.05
(-5 ft)	lb	*22110	*22110	*30780	*30780	*28550	15630	17280	9810	12020	6830	9080	5160	(29.7)
-3.0 m	kg	*13630	*13630	*18520	14940	*12640	7120	7830	4440			5060	2940	8.06
(-10 ft)	lb	*30050	*30050	*40830	32940	*27870	15700	17260	9790			11160	6480	(26.4)
-4.5 m	kg	*17920	*17920	*16430	15430	*11230	7350	*8010	4620			*5820	4460	6.48
(-15 ft)	lb	*39510	*39510	*36220	34020	*24760	16200	*17660	10190			*12830	9830	(21.3)

5.85 m (19' 2") boom, 3.60 m (11' 10") arm equipped with 1.08 m³ (SAE heaped) bucket and 600 mm (24") triple grouser shoe.

Load point height m (ft)		Load radius												At max. reach		
		1.5 m (5 ft)		3.0 m (10 ft)		4.5 m (15 ft)		6.0 m (20 ft)		7.5 m (25 ft)		9.0 m (30 ft)		Capacity		Reach
																m (ft)
6.0 m	kg									*3820	*3820			3900	2280	9.77
(20 ft)	lb									*8420	*8420			8600	5030	(32.1)
4.5 m	kg									*4380	3830	*2380	*2380	3460	1950	10.27
(15 ft)	lb									*9660	8440	*5250	*5250	7630	4300	(33.7)
3.0 m	kg							*5730	5440	*5030	3610	*3480	2470	3240	1790	10.49
(10 ft)	lb							*12630	11990	*11090	7960	*7670	5450	7140	3950	(34.4)
1.5 m	kg			*12720	*12720	*9770	7990	*7090	4980	5740	3360	4140	2340	3190	1730	10.46
(5 ft)	lb			*28040	*28040	*21540	17610	*15630	10980	12650	7410	9130	5160	7030	3810	(34.3)
Ground	kg			*11130	*11130	*11720	7330	8030	4610	5510	3150	4030	2230	3310	1800	10.18
Line	lb			*24540	*24540	*25840	16160	17700	10160	12150	6940	8880	4920	7300	3970	(33.4)
-1.5 m	kg	*9120	*9120	*13310	*13310	*12690	7020	7780	5370	5370	3020			3640	2010	9.62
(-5 ft)	lb	*20110	*20110	*29340	*29340	*27980	15480	17150	11840	11840	6660			8020	4430	(31.6)
-3.0 m	kg	*12230	*12230	*16930	14640	*12750	6970	7710	5340	5340	2990			4360	2470	8.71
(-10 ft)	lb	*26960	*26960	*37320	32280	*28110	15370	17000	11770	11770	6590			9610	5450	(28.6)
-4.5 m	kg	*15940	*15940	*17690	15030	*11810	7120	7820						*5630	3510	7.30
(-15 ft)	lb	*35140	*35140	*39000	33140	*26040	15700	17240						*12410	7740	(24.0)

1. Lifting capacity are based on SAE J1097 and ISO 10567.
2. Lifting capacity of the ROBEX series does not exceed 75% of tipping load with the machine on firm, level ground or 87% of full hydraulic capacity.
3. The load point is a hook (standard equipment) located on the back of the bucket.
4. (*) indicates load limited by hydraulic capacity.

LIFTING CAPACITY

Rating over-front Rating over-side or 360 degree

HX260 NL

5.85 m (19' 2") boom, 2.10 m (6' 11") arm equipped with 1.08 m³ (SAE heaped) bucket and 600 mm (24") triple grouser shoe.

Load point height m (ft)		Load radius								At max. reach		
		3.0 m (10 ft)		4.5 m (15 ft)		6.0 m (20 ft)		7.5 m (25 ft)		Capacity		Reach
												m (ft)
6.0 m	kg					*5710	5300			*5160	2840	8.32
(20 ft)	lb					*12590	11680			*11380	6260	(27.3)
4.5 m	kg			*7730	*7730	*6430	5040	*5920	3300	4490	2380	8.91
(15 ft)	lb			*17040	*17040	*14180	11110	*13050	7280	9900	5250	(29.2)
3.0 m	kg			*10170	7370	*7520	4670	5890	3160	4180	2160	9.17
(10 ft)	lb			*22420	16250	*16580	10300	12990	6970	9220	4760	(30.1)
1.5 m	kg			*12210	6710	8260	4340	5710	3000	4140	2120	9.14
(5 ft)	lb			*26920	14790	18210	9570	12590	6610	9130	4670	(30.0)
Ground	kg			*13090	6440	8020	4130	5590	2890	4380	2250	8.80
Line	lb			*28860	14200	17680	9110	12320	6370	9660	4960	(28.9)
-1.5 m	kg	*15540	13250	*13000	6430	7950	4070			5040	2640	8.13
(-5 ft)	lb	*34260	29210	*28660	14180	17530	8970			11110	5820	(26.7)
-3.0 m	kg	*17010	13550	*12000	6580	8070	4170			*6210	3550	6.98
(-10 ft)	lb	*37500	29870	*26460	14510	17790	9190			*13690	7830	(22.9)
-4.5 m	kg	*13270	*13270	*9380	6970							
(-15 ft)	lb	*29260	*29260	*20680	15370							

5.85 m (19' 2") boom, 2.50 m (8' 2") arm equipped with 1.08 m³ (SAE heaped) bucket and 600 mm (24") triple grouser shoe.

Load point height m (ft)		Load radius										At max. reach		
		1.5 m (5 ft)		3.0 m (10 ft)		4.5 m (15 ft)		6.0 m (20 ft)		7.5 m (25 ft)		Capacity		Reach
														m (ft)
6.0 m	kg											*4790	2640	8.67
(20 ft)	lb											*10560	5820	(28.4)
4.5 m	kg							*5960	5110	*5520	3350	4230	2220	9.23
(15 ft)	lb							*13140	11270	*12170	7390	9330	4890	(30.3)
3.0 m	kg					*9430	7540	*7100	4730	5920	3180	3940	2020	9.48
(10 ft)	lb					*20790	16620	*15650	10430	13050	7010	8690	4450	(31.1)
1.5 m	kg					*11660	6790	*8260	4360	5710	2990	3900	1970	9.45
(5 ft)	lb					*25710	14970	*18210	9610	12590	6590	8600	4340	(31.0)
Ground	kg					*12850	6430	8010	4110	5560	2860	4100	2070	9.13
Line	lb					*28330	14180	17660	9060	12260	6310	9040	4560	(30.0)
-1.5 m	kg			*15190	12990	*13050	6350	7890	4010	5510	2810	4640	2390	8.49
(-5 ft)	lb			*33490	28640	*28770	14000	17390	8840	12150	6190	10230	5270	(27.9)
-3.0 m	kg	*16450	*16450	*17960	13280	*12340	6450	7950	4070			5910	3130	7.41
(-10 ft)	lb	*36270	*36270	*39590	29280	*27210	14220	17530	8970			13030	6900	(24.3)
-4.5 m	kg			*14720	13830	*10300	6770							
(-15 ft)	lb			*32450	30490	*22710	14930							

1. Lifting capacity are based on SAE J1097 and ISO 10567.
2. Lifting capacity of the ROBEX series does not exceed 75% of tipping load with the machine on firm, level ground or 87% of full hydraulic capacity.
3. The load point is a hook located on the back of the bucket.
4. (*) indicates load limited by hydraulic capacity.

Rating over-front Rating over-side or 360 degree

HX260 NL

5.85 m (19' 2") boom, 3.05 m (10' 0") arm equipped with 1.08 m³ (SAE heaped) bucket and 600 mm (24") triple grouser shoe.

Load point height m (ft)		Load radius										At max. reach		
		1.5 m (5 ft)		3.0 m (10 ft)		4.5 m (15 ft)		6.0 m (20 ft)		7.5 m (25 ft)		Capacity		Reach
														m (ft)
6.0 m	kg									*3610	3530	4350	2320	9.22
(20 ft)	lb									*7960	7780	9590	5110	(30.2)
4.5 m	kg							*5240	5220	*4950	3410	3830	1960	9.74
(15 ft)	lb							*11550	11510	*10910	7520	8440	4320	(32.0)
3.0 m	kg			*13500	*13500	*8280	7790	*6430	4810	*5550	3200	3580	1780	9.98
(10 ft)	lb			*29760	*29760	*18250	17170	*14180	10600	*12240	7050	7890	3920	(32.7)
1.5 m	kg			*9550	*9550	*10740	6940	*7690	4390	5710	2990	3530	1730	9.95
(5 ft)	lb			*21050	*21050	*23680	15300	*16950	9680	12590	6590	7780	3810	(32.6)
Ground	kg			*10670	*10670	*12350	6430	7990	4090	5520	2810	3680	1810	9.65
Line	lb			*23520	*23520	*27230	14180	17610	9020	12170	6190	8110	3990	(31.7)
-1.5 m	kg	*10030	*10030	*13960	12680	12940	6240	7810	3930	5420	2720	4100	2050	9.05
(-5 ft)	lb	*22110	*22110	*30780	27950	28530	13760	17220	8660	11950	6000	9040	4520	(29.7)
-3.0 m	kg	*13630	*13630	*18520	12900	*12640	6260	7800	3920			5040	2600	8.06
(-10 ft)	lb	*30050	*30050	*40830	28440	*27870	13800	17200	8640			11110	5730	(26.4)
-4.5 m	kg	*17920	*17920	*16430	13360	*11230	6490	8000	4090			*5820	3990	6.48
(-15 ft)	lb	*39510	*39510	*36220	29450	*24760	14310	17640	9020			*12830	8800	(21.3)

5.85 m (19' 2") boom, 3.60 m (11' 10") arm equipped with 1.08 m³ (SAE heaped) bucket and 600 mm (24") triple grouser shoe.

Load point height m (ft)		Load radius												At max. reach		
		1.5 m (5 ft)		3.0 m (10 ft)		4.5 m (15 ft)		6.0 m (20 ft)		7.5 m (25 ft)		9.0 m (30 ft)		Capacity		Reach
																m (ft)
6.0 m	kg									*3820	3600			3880	2010	9.77
(20 ft)	lb									*8420	7940			8550	4430	(32.1)
4.5 m	kg									*4380	3440	*2380	2270	3440	1700	10.27
(15 ft)	lb									*9660	7580	*5250	5000	7580	3750	(33.7)
3.0 m	kg							*5730	4890	*5030	3220	*3480	2170	3220	1540	10.49
(10 ft)	lb							*12630	10780	*11090	7100	*7670	4780	7100	3400	(34.4)
1.5 m	kg			*12720	*12720	*9770	7110	*7090	4440	5710	2980	4120	2050	3170	1490	10.46
(5 ft)	lb			*28040	*28040	*21540	15670	*15630	9790	12590	6570	9080	4520	6990	3280	(34.3)
Ground	kg			*11130	*11130	*11720	6470	8030	4080	5490	2770	4010	1940	3290	1550	10.18
Line	lb			*24540	*24540	*25840	14260	17700	8990	12100	6110	8840	4280	7250	3420	(33.4)
-1.5 m	kg	*9120	*9120	*13310	12490	*12690	6170	7780	3860	5340	2640			3620	1740	9.62
(-5 ft)	lb	*20110	*20110	*29340	27540	*27980	13600	17150	8510	11770	5820			7980	3840	(31.6)
-3.0 m	kg	*12230	*12230	*16930	12610	*12750	6120	7710	3800	5310	2610			4330	2160	8.71
(-10 ft)	lb	*26960	*26960	*37320	27800	*28110	13490	17000	8380	11710	5750			9550	4760	(28.6)
-4.5 m	kg	*15940	*15940	*17690	12970	*11810	6260	7820	3890					*5630	3110	7.30
(-15 ft)	lb	*35140	*35140	*39000	28590	*26040	13800	17240	8580					*12410	6860	(24.0)

1. Lifting capacity are based on SAE J1097 and ISO 10567.
2. Lifting capacity of the ROBEX series does not exceed 75% of tipping load with the machine on firm, level ground or 87% of full hydraulic capacity.
3. The load point is a hook located on the back of the bucket.
4. (*) indicates load limited by hydraulic capacity.

LIFTING CAPACITY

Rating over-front Rating over-side or 360 degree

HX260 L HIGH WALKER

5.85 m (19' 2") boom, 2.10 m (6' 11") arm equipped with 1.08 m³ (SAE heaped) bucket, 600 mm (24") triple grouser shoe.

Load point height m (ft)		Load radius								At max. reach		
		3.0 m (10 ft)		4.5 m (15 ft)		6.0 m (20 ft)		7.5 m (25 ft)		Capacity		Reach
		over-front	over-side	over-front	over-side	over-front	over-side	over-front	over-side	over-front	over-side	m (ft)
6.0 m	kg					*5830	*5830			*5200	3760	8.49
(20 ft)	lb					*12850	*12850			*11460	8290	(27.9)
4.5 m	kg			*8270	*8270	*6660	*6660	*6000	4530	5300	3290	9.00
(15 ft)	lb			*18230	*18230	*14680	*14680	*13230	9990	11680	7250	(29.5)
3.0 m	kg			*10740	9940	*7790	6310	*6500	4370	5030	3090	9.19
(10 ft)	lb			*23680	21910	*17170	13910	*14330	9630	11090	6810	(30.2)
1.5 m	kg			*12520	9340	*8810	5990	6860	4210	5070	3100	9.09
(5 ft)	lb			*27600	20590	*19420	13210	15120	9280	11180	6830	(29.8)
Ground	kg			*13150	9130	*9400	5810	6760	4110	5450	3340	8.68
Line	lb			*28990	20130	*20720	12810	14900	9060	12020	7360	(28.5)
-1.5 m	kg	*17590	*17590	*12860	9160	*9380	5780			*6270	3940	7.91
(-5 ft)	lb	*38780	*38780	*28350	20190	*20680	12740			*13820	8690	(26.0)
-3.0 m	kg	*16340	*16340	*11590	9370	*8350	5940			*6110	5430	6.61
(-10 ft)	lb	*36020	*36020	*25550	20660	*18410	13100			*13470	11970	(21.7)

5.85 m (19' 2") boom, 2.50 m (8' 2") arm equipped with 1.08 m³ (SAE heaped) bucket and 600 mm (24") triple grouser shoe.

Load point height m (ft)		Load radius										At max. reach		
		1.5 m (5 ft)		3.0 m (10 ft)		4.5 m (15 ft)		6.0 m (20 ft)		7.5 m (25 ft)		Capacity		Reach
		over-front	over-side	over-front	over-side	over-front	over-side	over-front	over-side	over-front	over-side	over-front	over-side	m (ft)
6.0 m	kg							*5330	*5330			*4840	3520	8.83
(20 ft)	lb							*11750	*11750			*10670	7760	(29.0)
4.5 m	kg					*7520	*7520	*6210	*6210	*5620	4570	5010	3090	9.32
(15 ft)	lb					*16580	*16580	*13690	*13690	*12390	10080	11050	6810	(30.6)
3.0 m	kg					*10020	*10020	*7390	6370	*6190	4380	4760	2900	9.50
(10 ft)	lb					*22090	*22090	*16290	14040	*13650	9660	10490	6390	(31.2)
1.5 m	kg					*12040	9410	*8500	6010	*6780	4200	4780	2900	9.40
(5 ft)	lb					*26540	20750	*18740	13250	*14950	9260	10540	6390	(30.8)
Ground	kg					*12980	9100	*9220	5780	6730	4080	5100	3100	9.01
Line	lb					*28620	20060	*20330	12740	14840	8990	11240	6830	(29.6)
-1.5 m	kg	*12210	*12210	*16720	*16720	*12970	9070	*9390	5720			5880	3600	8.28
(-5 ft)	lb	*26920	*26920	*36860	*36860	*28590	20000	*20700	12610			12960	7940	(27.2)
-3.0 m	kg	*17920	*17920	*17370	*17370	*12010	9220	*8730	5820			*6160	4790	7.07
(-10 ft)	lb	*39510	*39510	*38290	*38290	*26480	20330	*19250	12830			*13580	10560	(23.2)
-4.5 m	kg			*13560	*13560	*9450	*9450							
(-15 ft)	lb			*29890	*29890	*20830	*20830							

1. Lifting capacity are based on SAE J1097 and ISO 10567.
2. Lifting capacity of the ROBEX series does not exceed 75% of tipping load with the machine on firm, level ground or 87% of full hydraulic capacity.
3. The load point is a hook located on the back of the bucket.
4. (*) indicates load limited by hydraulic capacity.

Rating over-front Rating over-side or 360 degree

HX260 L HIGH WALKER

5.85 m (19' 2") boom, 3.05 m (10' 0") arm equipped with 1.08 m³ (SAE heaped) bucket and 600 mm (24") triple grouser shoe.

Load point height m (ft)		Load radius										At max. reach		
		1.5 m (5 ft)		3.0 m (10 ft)		4.5 m (15 ft)		6.0 m (20 ft)		7.5 m (25 ft)		Capacity		Reach
		over-front	over-side	over-front	over-side	over-front	over-side	over-front	over-side	over-front	over-side	over-front	over-side	m (ft)
6.0 m	kg									*4050	*4050	*4390	3150	9.37
(20 ft)	lb									*8930	*8930	*9680	6940	(30.7)
4.5 m	kg							*5500	*5500	*5070	4620	4560	2780	9.82
(15 ft)	lb							*12130	*12130	*11180	10190	10050	6130	(32.2)
3.0 m	kg			*15180	*15180	*8910	*8910	*6730	6440	*5710	4400	4340	2610	9.99
(10 ft)	lb			*33470	*33470	*19640	*19640	*14840	14200	*12590	9700	9570	5750	(32.8)
1.5 m	kg			*9400	*9400	*11220	9530	*7970	6030	*6390	4190	4340	2600	9.90
(5 ft)	lb			*20720	*20720	*24740	21010	*17570	13290	*14090	9240	9570	5730	(32.5)
Ground	kg	*7440	*7440	*11330	*11330	*12580	9070	*8880	5750	6670	4020	4590	2750	9.53
Line	lb	*16400	*16400	*24980	*24980	*27730	20000	*19580	12680	14700	8860	10120	6060	(31.3)
-1.5 m	kg	*10850	*10850	*14910	*14910	*12950	8930	*9290	5620	6600	3950	5200	3140	8.85
(-5 ft)	lb	*23920	*23920	*32870	*32870	*28570	19690	*20480	12390	14550	8710	11460	6920	(29.0)
-3.0 m	kg	*14570	*14570	*18550	*18550	*12420	9010	*9010	5650			*5890	4000	7.76
(-10 ft)	lb	*32120	*32120	*40900	*40900	*27380	19860	*19860	12460			*12990	8820	(25.5)
-4.5 m	kg			*15520	*15520	*10650	9310							
(-15 ft)	lb			*34220	*34220	*23480	20530							

5.85 m (19' 2") boom, 3.60 m (11' 10") arm equipped with 1.08 m³ (SAE heaped) bucket and 600 mm (24") triple grouser shoe.

Load point height m (ft)		Load radius												At max. reach		
		1.5 m (5 ft)		3.0 m (10 ft)		4.5 m (15 ft)		6.0 m (20 ft)		7.5 m (25 ft)		9.0 m (30 ft)		Capacity		Reach
		over-front	over-side	over-front	over-side	over-front	over-side	over-front	over-side	over-front	over-side	over-front	over-side	over-front	over-side	m (ft)
6.0 m	kg									*4040	*4040			*3970	2790	9.92
(20 ft)	lb									*8910	*8910			*8750	6150	(32.5)
4.5 m	kg									*4510	*4510	*2270	*2270	4130	2480	10.34
(15 ft)	lb									*9940	*9940	*5950	*5950	9110	5470	(33.9)
3.0 m	kg			*12360	*12360	*7770	*7770	*6050	*6050	*5210	4420	*3670	3120	3940	2320	10.50
(10 ft)	lb			*27250	*27250	*17130	*17130	*13340	*13340	*11490	9740	*8090	6880	8690	5110	(34.4)
1.5 m	kg			*11540	*11540	*10310	9690	*7390	6070	*5970	4170	*4240	2990	3930	2300	10.42
(5 ft)	lb			*25440	*25440	*22730	21360	*16290	13380	*13160	9190	*9350	6590	8660	5070	(34.2)
Ground	kg	*6920	*6920	*11480	*11480	*12030	9090	*8470	5730	*6620	3980	*3950	2900	4130	2420	10.07
Line	lb	*15260	*15260	*25310	*25310	*26520	20040	*18670	12630	*14590	8770	*8710	6390	9110	5340	(33.0)
-1.5 m	kg	*9820	*9820	*14040	*14040	*12780	8850	*9080	5540	6510	3860			4600	2730	9.44
(-5 ft)	lb	*21650	*21650	*30950	*30950	*28180	19510	*20020	12210	14350	8510			10140	6020	(31.0)
-3.0 m	kg	*13040	*13040	*18010	*18010	*12630	8840	*9090	5510	6510	3870			*5500	3380	8.43
(-10 ft)	lb	*28750	*28750	*39710	*39710	*27840	19490	*20040	12150	14350	8530			*12130	7450	(27.7)
-4.5 m	kg	*16960	*16960	*16970	*16970	*11400	9050	*8160	5660					*5610	4950	6.86
(-15 ft)	lb	*37390	*37390	*37410	*37410	*25130	19950	*17990	12480					*12370	10910	(22.5)

1. Lifting capacity are based on SAE J1097 and ISO 10567.
2. Lifting capacity of the ROBEX series does not exceed 75% of tipping load with the machine on firm, level ground or 87% of full hydraulic capacity.
3. The load point is a hook located on the back of the bucket.
4. (*) indicates load limited by hydraulic capacity.