SHINEUI
Shineui Entec co,. Ltd

ADD : 440-17 Cheong Cheon-Dong
Pu Pyung-Ku Inchon Korea
TEL : 82-32-503-3796 FAX : 82-32-504-0261

Flow Switch-L

(SFS-L)

PRODUCT SPECIFICATION SHEET



FEATURES

- This switch has excellent character in low pressure.
- This switch cannot exert harmful influence by scrap.
- This switch has multifunction and can modify various structure for customer.

CONTENTS

Application 1
Features 1
Specifications ..... 1~2
Dimensions 2

APPLICATION

This switch is used in water flow sensing.

This switch has application to gas boiler and instantaneous warm water appliance, and water filtering appliance.

SPECIFICATIONS

Operating flow quantity(ℓ /min)	: ON	2.8± 0.4
(It can be changed by customer)	OFF	2.4± 0.4
Installation	: Vertical	
Permissible fluid temperature	: 0 ~ 60℃(It shall not be frozen)	
Ambient temperature	: 0 ~ 70℃	
Material	: Body	: NY66(G/F30%)
	Magnet	Sr - Fe
	O-ring	Silicone
	MG Plate	SUS316

www.shineui.co.kr shineui@shineui.co.kr

SPECIFICATIONS

Common use pressure		: 0.2 ~ 10 kgf/cm^2
Electrical rating	: Switching voltage	: DC100V, 150VAC
	Switching current	: AC, DC 0.5A
	Ratings	: 10VA(W)
	Contact resistance	: less than 300 mΩ (included resistance)
Withstand pressure		: When water pressure = 30kgf/㎠ is added for one minute, no external leakage shall be measured and it must be no damaged on the body.
Dielectric strength		: When AC1800V(50/60Hz) is added between the connector and body for one second, it shall be no unusual, detecting current is under 3mA.
Insulation resistance		: Between terminal and outer exposed metal parts shall be 100 MΩ ever by DC 500V meggar.

DIMENSIONS

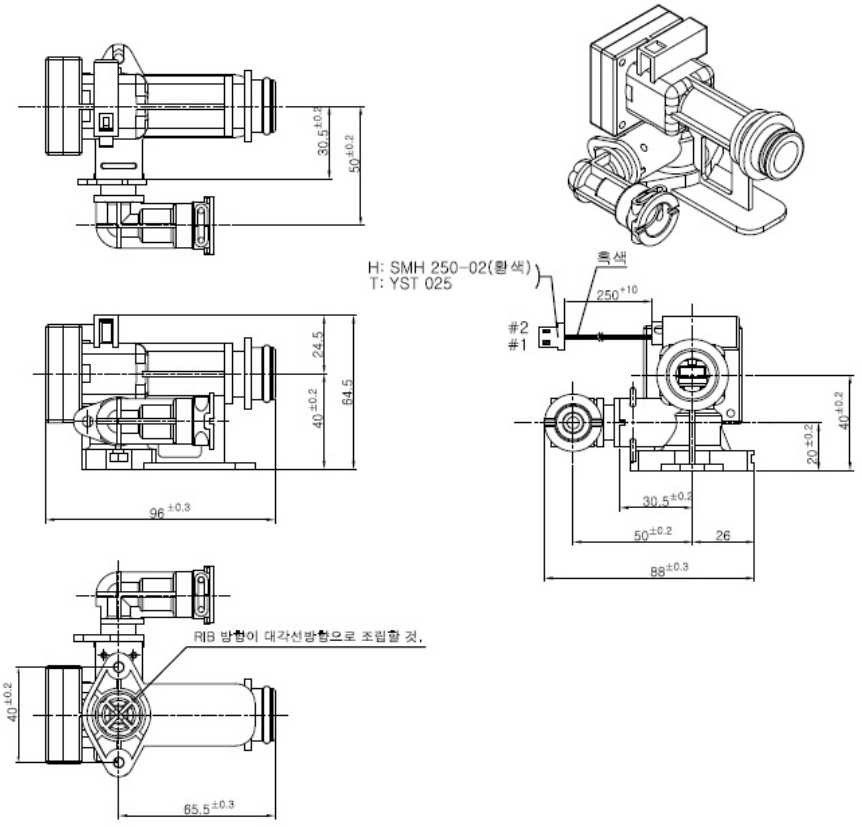

Fig 1. Flow Switch

The specifications and dimensions can be changed without warning