DM-170

Direct Drive Motor NC Rotary Table



- Max. table speed 200min^{-1}
- High Precision indexing system (With DD Motor)
- Vertical & Horizontal available
- Compact Design
- Extremely Rigid Body
- Yaskawa Direct Drive Motor

DM-SERIES

Model No. DM-170

- Table Diameter
- TYPE : Direct Drive Motor Type NC Rotary Table

Max. Table Dia. [mm]	Center Height [mm]	Resister Dia. On face plate [mm]	Spindle Thruhole Dia. [mm]	Clamp Method	Clamp Torque [N·m]
Ø170	125	Ø50H7	-	Pneumatic	-

Max. Spindle Speed [mm^{-1}]	Gear Ratio	Repeatability Accuracy [sec]	Indexing Accuracy [sec]	Allowable Work Inertia [10^{-4}kgm^2]	Net Weight [kg]
200	1/1	±1.3	15	-	64

Allowable Load					Allowable Cutting Torque
Horizontal	Vertical	F [N]	F x L [N·m]	F x L [N·m]	[N·m]
-	-	3300	-	-	-

DM-170

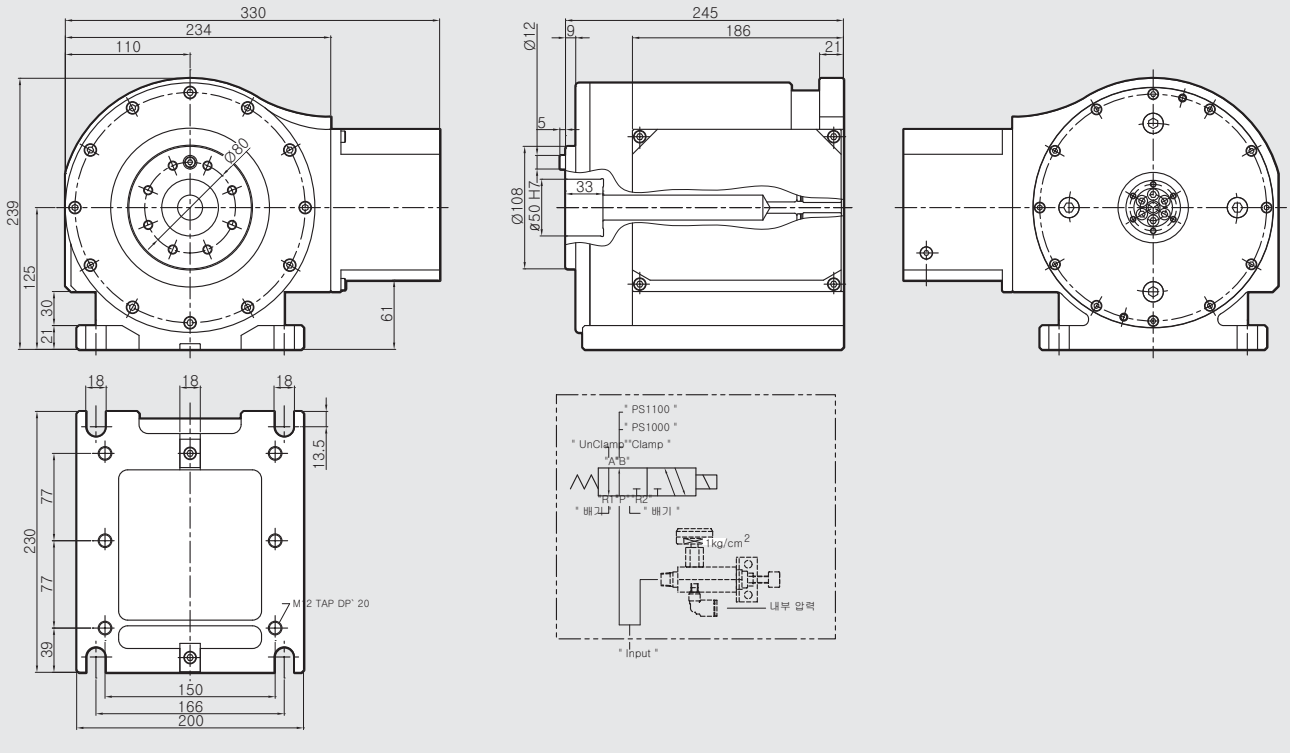

DM-260

Direct Drive Motor NC Rotary Table



- Max. table speed 200min^{-1}
- High Precision indexing system (With DD Motor)
- Vertical & Horizontal available
- Compact Design
- Extremely Rigid Body
- Yaskawa Direct Drive Motor

DM-SERIES

Model No. DM-260

Table Diameter

TYPE : Direct Drive Motor Type NC Rotary Table

Max. Table Dia. [mm]	Center Height [mm]	Resister Dia. On face plate [mm]	Spindle Thruhole Dia. [mm]	Clamp Method	Clamp Torque [N·m]
Ø258	150	Ø60H7	Ø35H8	Pneumatic	400

Max. Spindle Speed [mm^{-1}]	Gear Ratio	Repeatability Accuracy [sec]	Indexing Accuracy [sec]	Allowable Work Inertia [10^{-4}kgm^2]	Net Weight [kg]
200	1/1	±1.3	10	-	84

Allowable Load					Allowable Cutting Torque
Horizontal	Vertical	F [N]	F x L [N·m]	F x L [N·m]	[N·m]
70	35	4000	-	400	51

DM-260

