High Sensitivity

Maximum pass width: 210 mm

KDS8102BF / BW

Pass height: 50 mm (KDS8102BF)
45 mm (KDS8102BW)

KDS8103BF / BW

Pass height: 80 mm (KDS8103BF)
75 mm (KDS8103BW)

KDS8104BF / BW

Pass height: 100 mm (KDS8104BF)
95 mm (KDS8104BW)



KDS8102BW

External Dimensions Non-Waterproof

KDS8102BF
KDS8103BF
KDS8104BF

Model	H1	H2
KDS8102BF	50	1125
KDS8103BF	80	1125
KDS8104BF	100	1145

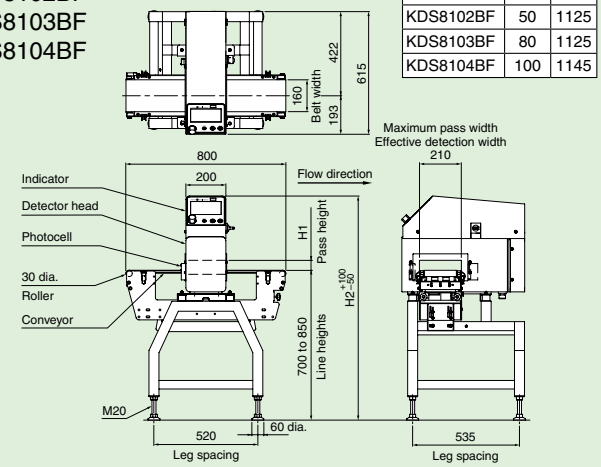

Units: mm

External Dimensions Waterproof

KDS8102BW
KDS8103BW
KDS8104BW

Model	H1	H2
KDS8102BW	45	1120
KDS8103BW	75	1120
KDS8104BW	95	1140

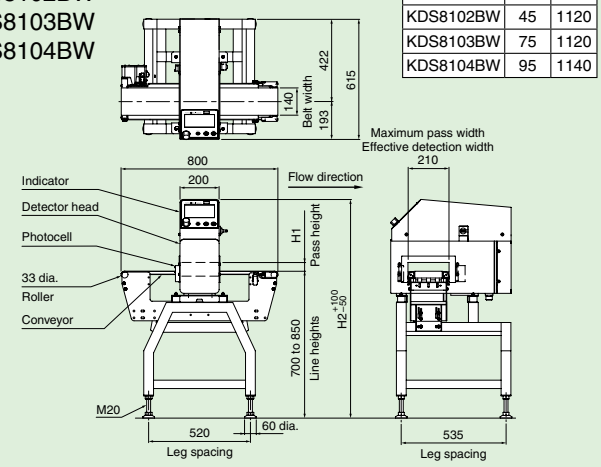

Units: mm

Specifications

Model	KDS8102BF	KDS8102BW	KDS8103BF	KDS8103BW	KDS8104BF	KDS8104BW
Pass height	50 mm	45 mm	80 mm	75 mm	100 mm	95 mm
Maximum pass width	210 mm					
Belt width	160 mm	140 mm	160 mm	140 mm	160 mm	140 mm
Display	7-inch color TFT LCD					
Operation method	Touch panel (Start, Stop, and Home are direct push buttons)					
Preset memory	Maximum 200					
Product packaging	Both general and aluminum-evaporated film packaged products					
Detection method	Simultaneous 2-frequency magnetization detection method					
Belt speed	10 to 90 m/min (variable speed depending on Product No.)					
Maximum product weight [1]	5 kg [BF (Non-waterproof) types can support up to 10 kg and BW (waterproof) types can support up to 15 kg as an option at the belt speed of 5 to 49 m/min.]					
Metal detection	Rejection signal output, or belt stop					
Power requirements	100 to 120 Vac +10% –15% or 200 to 240 Vac +10% –15%, single phase, 50/60 Hz, 200 VA, rush current 62 A (typ.) (20 ms or less)					
Mass	90 kg	92 kg	90 kg	92 kg	92 kg	94 kg
Environmental conditions	0 to 40°C, relative humidity 30 to 85%, non-condensing					
Protection class	IP30 compliance	IP66 compliance	IP30 compliance	IP66 compliance	IP30 compliance	IP66 compliance
Exterior	BF (Non-waterproof) type: painted (Indicator and detector head: stainless steel (SUS304)) BW (Waterproof) type: stainless steel (SUS304)					
Data output	USB port (USB2.0), Ethernet interface (10BASE-T, 100BASE-TX)					

1: Sum total of product weight on the conveyor.
Note: The shape and size (length, width and height) of products to can be inspected depend on the rejector type.
Note: The noise level of the metal detectors does not exceed 70 dB (A).

High Sensitivity

Maximum pass width: 300 mm

KDS8112BF / BW

Pass height: 50 mm (KDS8112BF)
45 mm (KDS8112BW)

KDS8113BF / BW

Pass height: 80 mm (KDS8113BF)
75 mm (KDS8113BW)



KDS8112BW

External Dimensions Non-Waterproof

KDS8112BF
KDS8113BF

Model	H1	H2
KDS8112BF	50	1125
KDS8113BF	80	1125

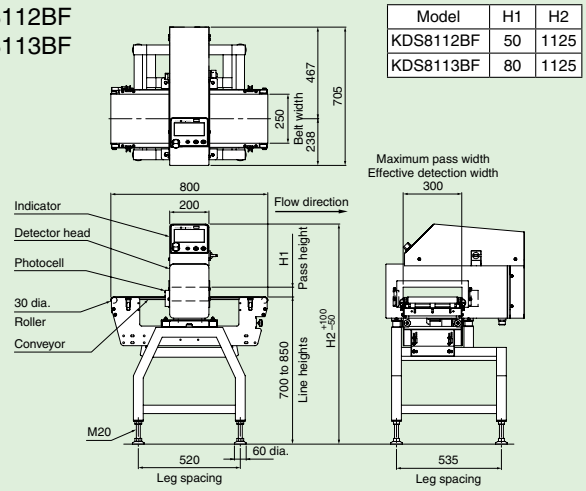

Units: mm

External Dimensions Waterproof

KDS8112BW
KDS8113BW

Model	H1	H2
KDS8112BW	45	1120
KDS8113BW	75	1120

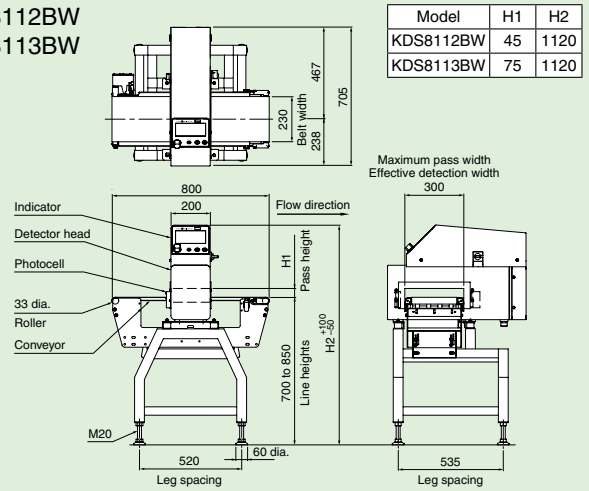

Units: mm

Specifications

Model	KDS8112BF	KDS8112BW	KDS8113BF	KDS8113BW
Pass height	50 mm	45 mm	80 mm	75 mm
Maximum pass width	300 mm			
Belt width	250 mm	230 mm	250 mm	230 mm
Display	7-inch color TFT LCD			
Operation method	Touch panel (Start, Stop, and Home are direct push buttons)			
Preset memory	Maximum 200			
Product packaging	Both general and aluminum-evaporated film packaged products			
Detection method	Simultaneous 2-frequency magnetization detection method			
Belt speed	10 to 90 m/min (variable speed depending on Product No.)			
Maximum product weight [1]	5 kg [BF (Non-waterproof) types can support up to 10 kg and BW (waterproof) types can support up to 15 kg as an option at the belt speed of 5 to 49 m/min.]			
Metal detection	Rejection signal output, or belt stop			
Power requirements	100 to 120 Vac +10% –15% or 200 to 240 Vac +10% –15%, single phase, 50/60 Hz, 200 VA, rush current 62 A (typ.) (20 ms or less)			
Mass	97 kg	102 kg	97 kg	102 kg
Environmental conditions	0 to 40°C, relative humidity 30 to 85%, non-condensing			
Protection class	IP30 compliance	IP66 compliance	IP30 compliance	IP66 compliance
Exterior	BF (Non-waterproof) type: painted (Indicator and detector head: stainless steel (SUS304)) BW (Waterproof) type: stainless steel (SUS304)			
Data output	USB port (USB2.0), Ethernet interface (10BASE-T, 100BASE-TX)			

1: Sum total of product weight on the conveyor.
Note: The shape and size (length, width and height) of products to can be inspected depend on the rejector type.
Note: The noise level of the metal detectors does not exceed 70 dB (A).

High Sensitivity

Maximum pass width: 300 mm

KDS8115BF / BW

Pass height: 120 mm (KDS8115BF)
115 mm (KDS8115BW)

KDS8116BF / BW

Pass height: 180 mm (KDS8116BF)
175 mm (KDS8116BW)

External Dimensions Non-Waterproof

KDS8115BF
KDS8116BF

Model	H1	H2
KDS8115BF	120	1165
KDS8116BF	180	1225

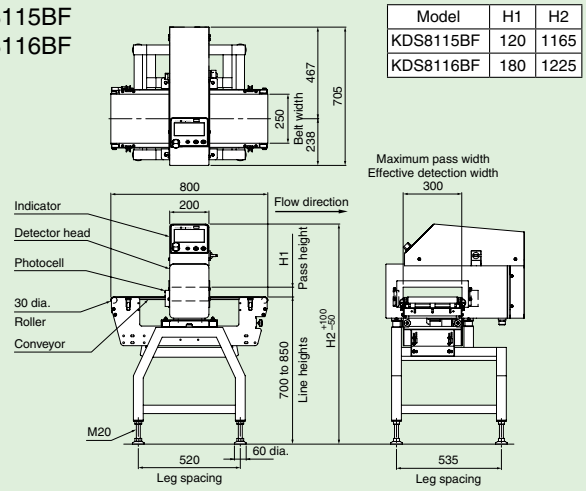

Units: mm

External Dimensions Waterproof

KDS8115BW
KDS8116BW

Model	H1	H2
KDS8115BW	115	1160
KDS8116BW	175	1220

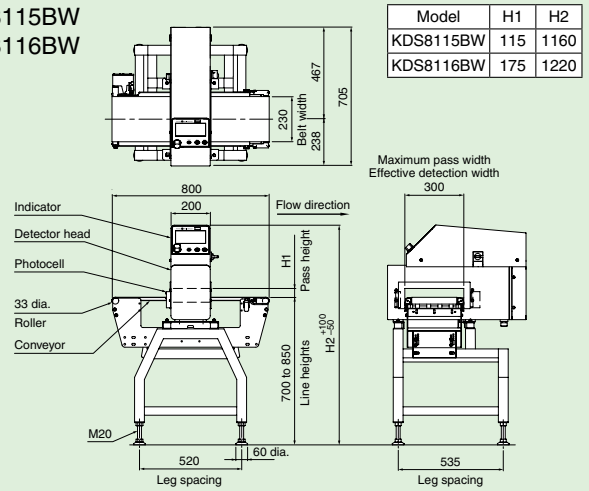

Units: mm

Specifications

Model	KDS8115BF	KDS8115BW	KDS8116BF	KDS8116BW
Pass height	120 mm	115 mm	180 mm	175 mm
Maximum pass width	300 mm			
Belt width	250 mm	230 mm	250 mm	230 mm
Display	7-inch color TFT LCD			
Operation method	Touch panel (Start, Stop, and Home are direct push buttons)			
Preset memory	Maximum 200			
Product packaging	Both general and aluminum-evaporated film packaged products			
Detection method	Simultaneous 2-frequency magnetization detection method			
Belt speed	10 to 90 m/min (variable speed depending on Product No.)			
Maximum product weight [1]	5 kg [BF (Non-waterproof) types can support up to 10 kg and BW (waterproof) types can support up to 15 kg as an option at the belt speed of 5 to 49 m/min.]			
Metal detection	Rejection signal output, or belt stop			
Power requirements	100 to 120 Vac +10% –15% or 200 to 240 Vac +10% –15%, single phase, 50/60 Hz, 200 VA, rush current 62 A (typ.) (20 ms or less)			
Mass	100 kg	105 kg	103 kg	108 kg
Environmental conditions	0 to 40°C, relative humidity 30 to 85%, non-condensing			
Protection class	IP30 compliance	IP66 compliance	IP30 compliance	IP66 compliance
Exterior	BF (Non-waterproof) type: painted (Indicator and detector head: stainless steel (SUS304)) BW (Waterproof) type: stainless steel (SUS304)			
Data output	USB port (USB2.0), Ethernet interface (10BASE-T, 100BASE-TX)			

1: Sum total of product weight on the conveyor.
Note: The shape and size (length, width and height) of products to can be inspected depend on the rejector type.
Note: The noise level of the metal detectors does not exceed 70 dB (A).

High Sensitivity

Maximum pass width: 450 mm

KDS8122BF / BW

Pass height: 50 mm (KDS8122BF)
45 mm (KDS8122BW)

KDS8124BF / BW

Pass height: 100 mm (KDS8124BF)
95 mm (KDS8124BW)



KDS8122BW

External Dimensions Non-Waterproof

KDS8122BF
KDS8124BF

Model	H1	H2
KDS8122BF	50	1125
KDS8124BF	100	1145

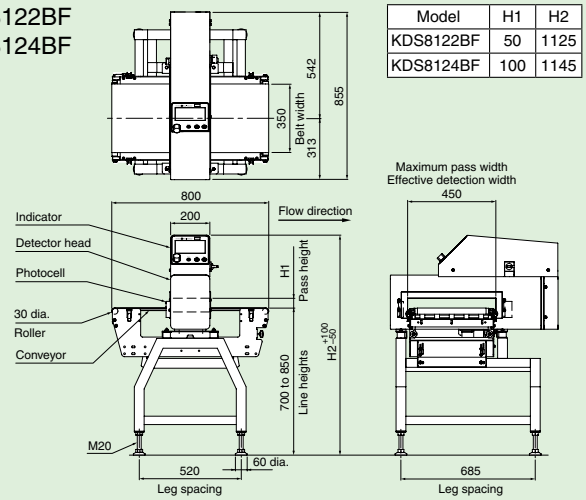

Units: mm

External Dimensions Waterproof

KDS8122BW
KDS8124BW

Model	H1	H2
KDS8122BW	45	1120
KDS8124BW	95	1140

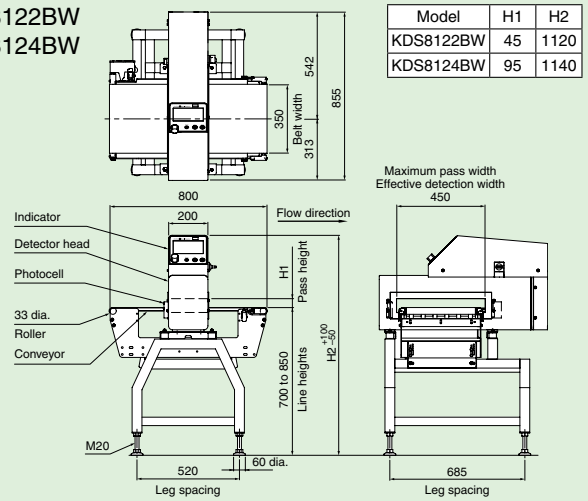

Specifications

Model	KDS8122BF	KDS8122BW	KDS8124BF	KDS8124BW
Pass height	50 mm	45 mm	100 mm	95 mm
Maximum pass width	450 mm			
Belt width	350 mm			
Display	7-inch color TFT LCD			
Operation method	Touch panel (Start, Stop, and Home are direct push buttons)			
Preset memory	Maximum 200			
Product packaging	Both general and aluminum-evaporated film packaged products			
Detection method	Simultaneous 2-frequency magnetization detection method			
Belt speed	10 to 90 m/min (variable speed depending on Product No.)			
Maximum product weight [1]	5 kg [BF (Non-waterproof) types can support up to 10 kg and BW (waterproof) types can support up to 15 kg as an option at the belt speed of 5 to 49 m/min.]			
Metal detection	Rejection signal output, or belt stop			
Power requirements	100 to 120 Vac +10% –15% or 200 to 240 Vac +10% –15%, single phase, 50/60 Hz, 200 VA, rush current 62 A (typ.) (20 ms or less)			
Mass	112 kg	117 kg	117 kg	122 kg
Environmental conditions	0 to 40°C, relative humidity 30 to 85%, non-condensing			
Protection class	IP30 compliance	IP66 compliance	IP30 compliance	IP66 compliance
Exterior	BF (Non-waterproof) type: painted (Indicator and detector head: stainless steel (SUS304)) BW (Waterproof) type: stainless steel (SUS304)			
Data output	USB port (USB2.0), Ethernet interface (10BASE-T, 100BASE-TX)			

1: Sum total of product weight on the conveyor.
Note: The shape and size (length, width and height) of products to can be inspected depend on the rejector type.
Note: The noise level of the metal detectors does not exceed 70 dB (A).

High Sensitivity

Maximum pass width: 450 mm

KDS8125BF / BW

Pass height: 130 mm (KDS8125BF)
125 mm (KDS8125BW)

KDS8126BF / BW

Pass height: 180 mm (KDS8125BF)
175 mm (KDS8125BW)

External Dimensions Non-Waterproof

KDS8125BF
KDS8126BF

Model	H1	H2
KDS8125BF	130	1175
KDS8126BF	180	1225

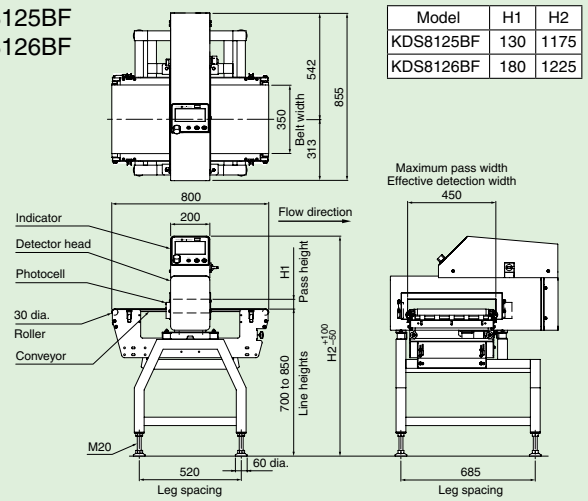

Units: mm

External Dimensions Waterproof

KDS8125BW
KDS8126BW

Model	H1	H2
KDS8125BW	125	1170
KDS8126BW	175	1220

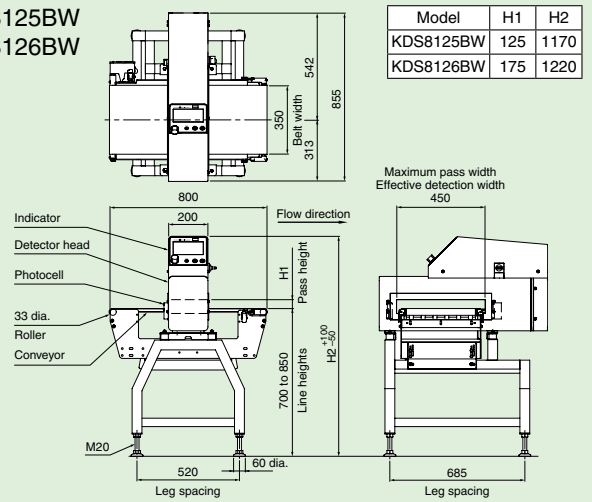

Units: mm

Specifications

Model	KDS8125BF	KDS8125BW	KDS8126BF	KDS8126BW
Pass height	130 mm	125 mm	180 mm	175 mm
Maximum pass width	450 mm			
Belt width	350 mm			
Display	7-inch color TFT LCD			
Operation method	Touch panel (Start, Stop, and Home are direct push buttons)			
Preset memory	Maximum 200			
Product packaging	Both general and aluminum-evaporated film packaged products			
Detection method	Simultaneous 2-frequency magnetization detection method			
Belt speed	10 to 90 m/min (variable speed depending on Product No.)			
Maximum product weight [1]	5 kg [BF (Non-waterproof) types can support up to 10 kg and BW (waterproof) types can support up to 15 kg as an option at the belt speed of 5 to 49 m/min.]			
Metal detection	Rejection signal output, or belt stop			
Power requirements	100 to 120 Vac +10% –15% or 200 to 240 Vac +10% –15%, single phase, 50/60 Hz, 200 VA, rush current 62 A (typ.) (20 ms or less)			
Mass	120 kg	125 kg	123 kg	128 kg
Environmental conditions	0 to 40°C, relative humidity 30 to 85%, non-condensing			
Protection class	IP30 compliance	IP66 compliance	IP30 compliance	IP66 compliance
Exterior	BF (Non-waterproof) type: painted (Indicator and detector head: stainless steel (SUS304)) BW (Waterproof) type: stainless steel (SUS304)			
Data output	USB port (USB2.0), Ethernet interface (10BASE-T, 100BASE-TX)			

1: Sum total of product weight on the conveyor.
Note: The shape and size (length, width and height) of products to can be inspected depend on the rejector type.
Note: The noise level of the metal detectors does not exceed 70 dB (A).