SPU(Signal Processing Unit)

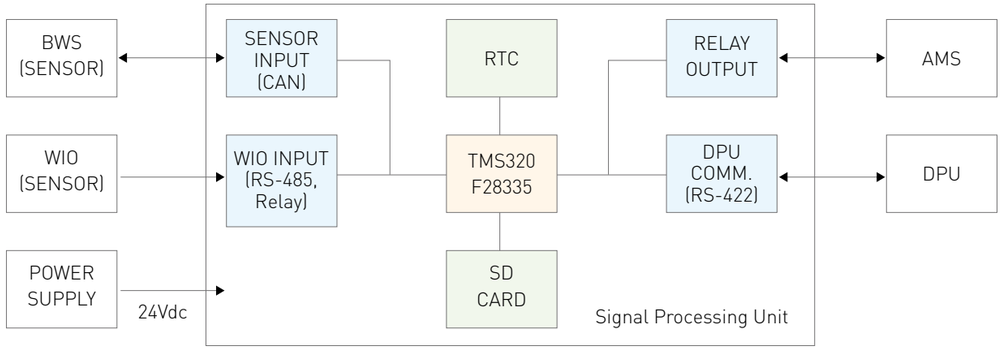

The Signal Processing Unit is capable of simultaneously processing signals from bearing wear sensors, water in oil sensor. It also provides the terminations for alarm integration with additional alarm diagnostics.

- SIZE : 350 x 188 x 124, (with installation bracket)
- Power : max. 3A@24Vdc
- BWS sensor input : CAN 2.0B (with sensor power)
- SD Card(16 Gbyte) : 1ch, saved 5 year's data
- DPU output : RS-422
- RS-422/485 : 1ch
- Relay Output(Dry Contact): 3ch
- GL Certificated



DPU(Data Processing Unit)



- 1024 x 768, 15"TFT-LCD with Touch Screen
- Windows XP, Windows 7
- 345 x 412 x 92.3 mm
- CE, FCC, UL Approvals
- RS232/422/485, CAN, SD Card, Ethernet
- GL Certificated



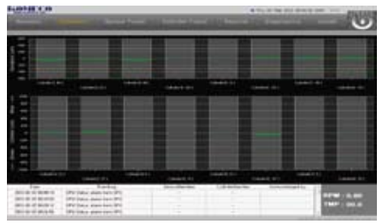



KOMECO
금오기전주식회사

ZIP CODE 46059, 1554, Bansong-ro, Gijang-eup, Gijang-gun, Busan, Korea
TEL +82-51-724-5070~1 FAX +82-51-724-5175
Hom Page www.komeco.net / E-mail kos@komeco.net

KOMECO
금오기전주식회사

Bearing Wear Condition Monitoring System

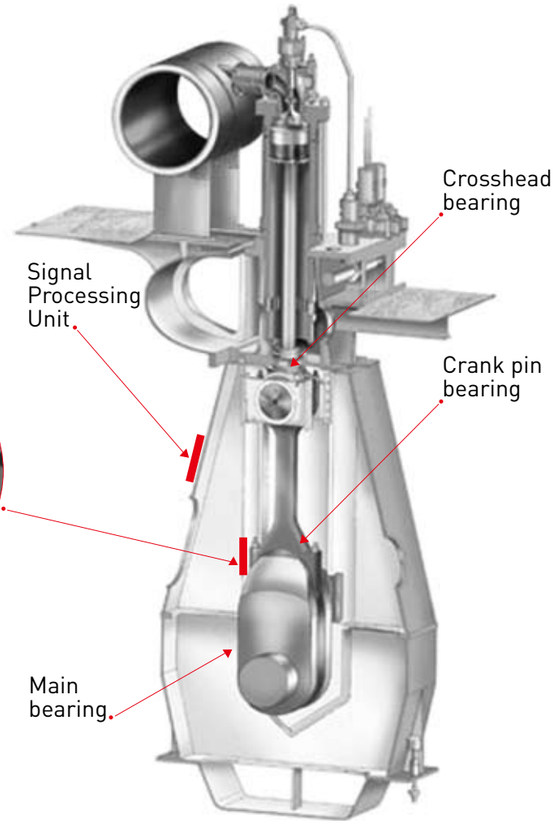





| Data Processing Unit |



| Bearing Wear Sensor |



| Signal Processing Unit |



| Optional WIO |

General system description

The Bearing Wear condition monitoring system has the function of predicting
Bearing wear in large two-stroke diesel engines before it becomes critical.
The system will provide an early warning if any of the three crank-train bearings
(crosshead, crank-pin and main bearings) experience unexpected problems during ship operation

Open-up inspections and bearing failure

According to MAN Diesel & Turbo:

"Less than 1% of bearing problems are found during open-up inspection, but more than 2% of bearing problems are caused by open-up inspections."

- More than 7,000 ships have open-up inspections every year
- More than 2% have crank train bearing failures caused by open-up inspections – that's more than 140 vessels and 11 every month

* Source: MAN Diesel & Turbo

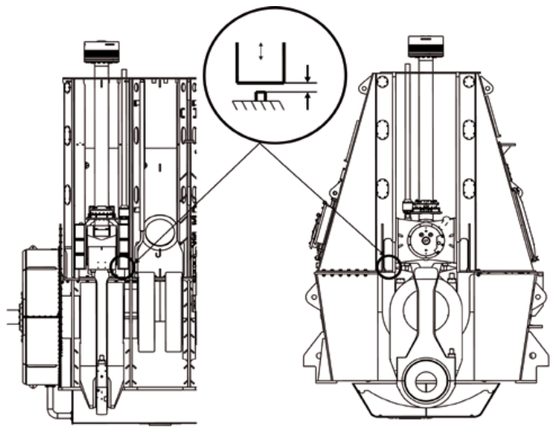

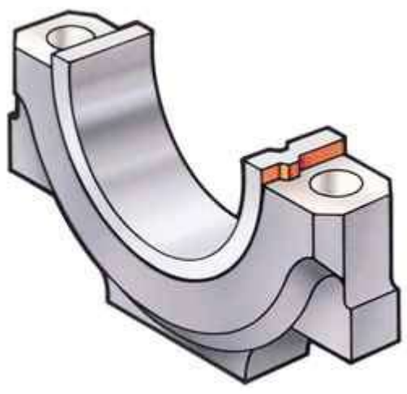

Germanischer Lloyd says that open-up inspections can be omitted if the following MAN Diesel & Turbo approved equipment is fitted:

- Bearing Wear Monitor (BWM)
- Water in Oil Monitor (WIO)
- Shaft Line Earth Monitor (SLEM)

The system comprises

- 2 wear sensors per cylinder mounted on a bracket located on the engine frame
- DPU providing data storage, full class reporting and local or remote user interface
- SPU mounted onto the outside of the engine
- WIO sensor mounted in the main lube oil feed pipe

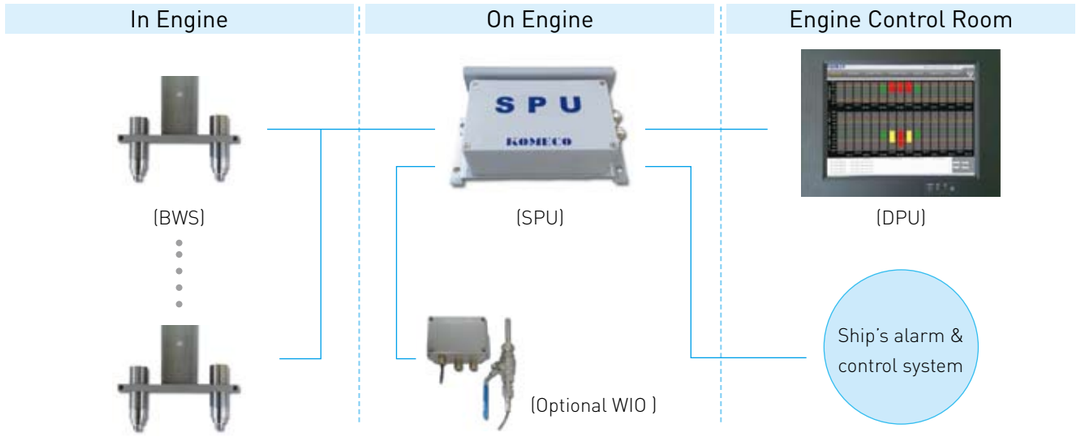

BWS(Bearing Wear Sensor)



The wear sensors are robust, proven electronic sensors, which use a low intensity electromagnetic field to detect the position of the guide shoes at bottom dead center (BDC). The sensors are fixed to custom designed brackets for different engine types.



- **Size :** M27 x 1.0 L:95.5 mm
- **Power Supply :** max. 0.5W, 8Vdc
- **Output :** CAN 2.0B
- **Protection Grade :** IP67 with plug fully locked
- **Operation Temp. :** 0 ~ + 70℃
- **Storage Temp. :** -20 ~ + 80℃
- **Resolution :** ±10 ㎛
- **Measurement Rage :** 1.0 ~ 6.0 mm
- **GL Certificated**