EB-363

960H 36배 오토 포커스 줌 박스 카메라



제품특징

- 1/4" 613K pixels Sony Super HAD II Double scan CCD
- 700TV lines 고해상도
- 36배 광학 줌 & 32배 디지털 줌(Total x1,152)
- True WDR(x512)
- DNR(디지털 노이즈 제거 기능: 2D+3D)
- DIS(디지털 영상 흔들림 보정 기능)
- HLC 역광보정 기능
- Day & Night(ICR)
- Privacy Mask(사생활 보호 기능)
- Motion Detection(움직임 감지 기능)
- 멀티 프로토콜(VISCA, Pelco-D, Pelco-P)

MODEL	EB-363N	EB-363P
ELECTRICAL		
Power Source	DC12V±10%	
Power Consumption	Max 400mA	
GENERAL		
Power Input	Connector	
Video Output	Connector	
Operating Temperature	-10°C ~ +50°C	
Operating Humidity	0 ~ 96%(Non-condencing)	
Storage Temperature	-20°C ~ +60°C	
Dimensions	61.8(W) x 66.5(H) x 119.2(D)	
Weight	Approximately 0.38kg	

외관도

Unit : mm

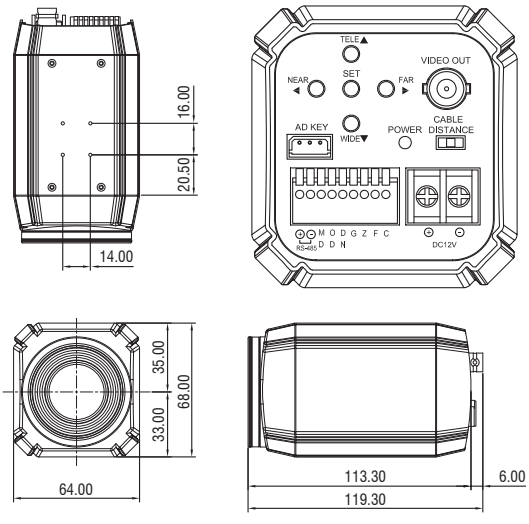

- 960H 700TVL, Effio DSP
- True WDR, 36배 줌

제품사양

MODEL	EB-363N	EB-363P
Image Sensor	1/4" SONY Super HAD II Double Scan CCD	
Total Pixels	NTSC : 1028(H) × 508(V)	PAL : 1028(H) x 596(V)
Scanning System	Interlace	
Scanning Frequency	15.734KHz(H),59.94Hz(V)	15.625KHz(H),50Hz(V)
Sync. System	Internal	
Resolution	700 TV lines (COLOR)	
	800 TV lines (BW)	
Min. illumination	Color : 0.5 lux , BW : 0.2 lux	
	Color DSS : 0.001 lux , BW DSS : 0.0004 lux	
Video Output	1.0 Vp-p (75 ohm, composite)	
S/N Ratio	More than 50dB (AGC off)	
LENS		
Lens Type	x36 Day & Night Zoom Lens	
Zoom Ratio	Optical x36, Digital x32 Zoom	
Focal Length	f = 3.4 mm ~ 122.4 mm	
Aperture Ratio	F1.6 (wide) ~ F4.5 (tele)	
FUNCTION		
Focus	Auto / Zoom-Trig / Manual	
Focus Distance	0.1 / 1.3 / 1.8 / 3.0 / 5.0 m	
Digital Zoom	Off / Max x2~x32	
Exposure	Auto / Shutter PRI / Manual	
Gain Control	Off / On (Auo Max 30dB)	
Shutter Speed	1/60 ~ 1/100,000 sec	1/50 ~ 1/100,000 sec
Digital Shutter Speed	Off / Max x2~x512	
Flickerless	Off / On	
Brightness	1 ~15 steps	
WDR / BLC	Off / WDR / BLC	
Day&Night	Auto / Sens-in / Ext / Day / Night	
White Balance	ATW / One-Push / Indoor / Outdoor / Manual / Auto	
Image DNR	Off / Manual / Auto	
HR	Off / 1~7 steps	
Mirror	Off / H / V / H+V	
Sharpness	1 ~ 16 steps	
Effect	Off / Negative / B&W	
Freeze	Off / On	
Intelligent	Privacy / MD / OD	
Privacy Mask	Off / 16 positions	
Motion Detection	Off / 3 positions	
Object Detection	Off / On	
Special	Sync / Phase / Comm	
Sync Mode	INT / LL	
Phase	0 ~ 255 steps	
Communication	Baud Rate : 2400 / 4800 / 9600 / 19200 / 38400	
	Protocol : Pelco-D / Pelco- P / VISCA	
Display	Disp Sel / Init Sel / Set Title / Set Init Msg / Language	
Disp Sel(Off / On)	ID / Title / Zoom Ratio	
Init Sel(Off / On)	ID / Baud Rate / Protocol / Version / Init Msg	
SET Title	Text Edit	
SET Init Msg	Text Edit	
Language	English / Chinese / Korean	
OSD Text	0 ~ 9 , A ~ Z , a ~ z	

유선 리모콘

IRC-300



Key setting : TELE(UP) , WIDE(DOWN)
NEAR(LEFT), FAR(RIGHT)
MENU, F1, F2