ShinMaywa

Air Spindle

BUILT-IN DD Series



ShinMaywa Air Spindle

Industry-Leading Low Non-Repeatable Run-Out (NRRO) and New Crash-Proof Structure

Backed by state-of-the-art technology and precision machining expertise as a manufacturer of frameless motors, ShinMaywa offers industry-leading, highly rigid and precise air spindles.
Air spindles inherently require strict control of the operating environment and usage conditions to avoid problems such as crashing or seizing in extreme cases.
ShinMaywa has therefore developed new air spindles featuring a crash-proof structure, as well as a slotless motor for more accurate speed control. These new, easier-to-use, and higher-performance air spindles will help improve the performance of your test equipments for HDD disks/heads, wafers and DVDs.
* Slotless motor: The motor does not have slots for coils.

Key Features of ShinMaywa Air Spindles

- Compact design with a built-in motor and encoder
- High-performance static pressure air bearings for low NRRO, low friction loss, and low heat generation
- Completely non-contact design, so the air spindles maintain their original accuracy almost indefinitely if supplied with clean air
- Slotless motor with even higher rotating accuracy than our conventional products
- Crash-proof structure for crash-free operation

Slotless motor

Unlike conventional motors, the slotless motor used in ShinMaywa air spindles benefit from a slotless structure that eliminates the magnetic interaction between magnets and core. The slotless motor delivers superior starting performance as well as smooth rotation and accurate speed control.

Crash-proof structure

Conventional self-throttled air bearings are liable to seize up if they come into contact with the shaft due to overloading or contamination in the supply air, causing repairing the air bearings and restoring the system. The crash-proof air bearing features an improved internal structure that significantly reduces the chance of crashing.

ShinMaywa builds air spindles to meet every conceivable requirement.

Order guidance

Consultation	Please feel free to call our sales office, or contact us via our website: ▶ http://www.shinmaywa.co.jp/dd/airspindle_e/index.htm
Planning	Please provide details of the usage conditions and required specifications. We will conduct motor simulations and suggest the optimum motor.
Proposal of specifications	We will present the optimum motor for your application, with the final drawing and specification.
Order	We accept any order quantity, even just one unit.
Delivery	We will deliver your special motors.

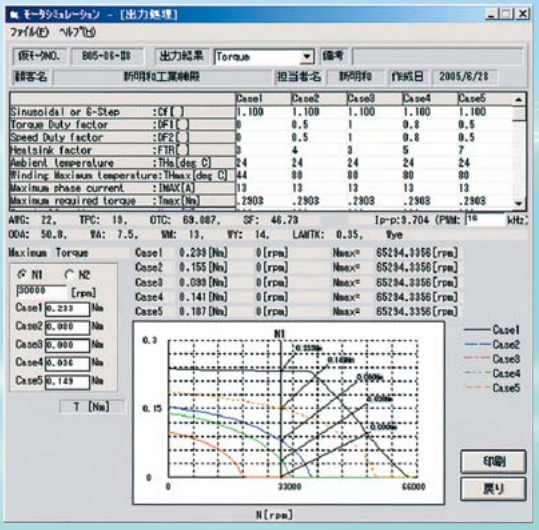

Product Lineup


Air Spindle SPM30C


Air Spindle SPM30


Air Spindle SPM28


Air Spindle SPM27H


Non-Switching Driver NS20


Servo Driver SVC

Air Spindle

SPM30C / SPM30

Industry-leading low-NRRO models with high-precision slotless motor and crash-proof structure



Features

- Slotless motor (SPM30C only)
- Crash-proof structure (SPM30C only)
- NRRO of 2 nm or less at speeds of 20,000 r/min and lower (measured according to ShinMaywa standards)
- Reduced unbalance (not exceeding 0.05 gmm) for minimum vibration at high speeds

TIR
Radial

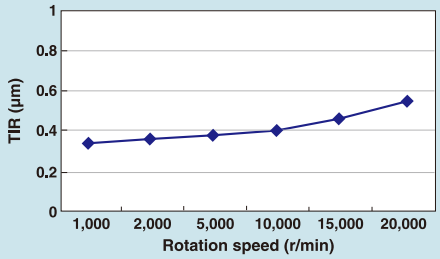

NRRO
Radial

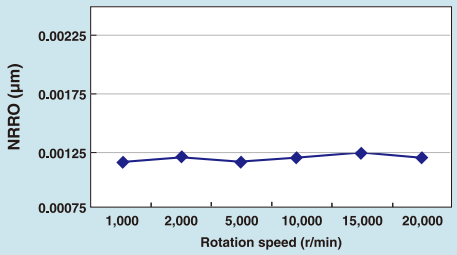

SPM30C

Crash-proof
Slotless motor

Dimensions (Unit: mm/inch)

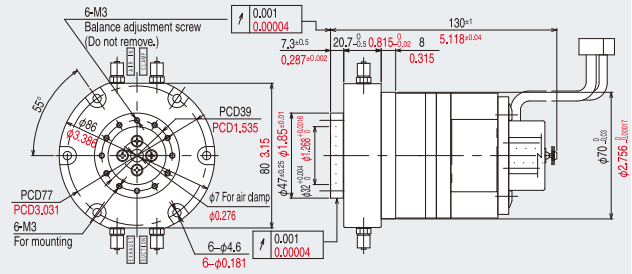

SPM30

Not crash-proof
Conventional motor

Dimensions (Unit: mm/inch)

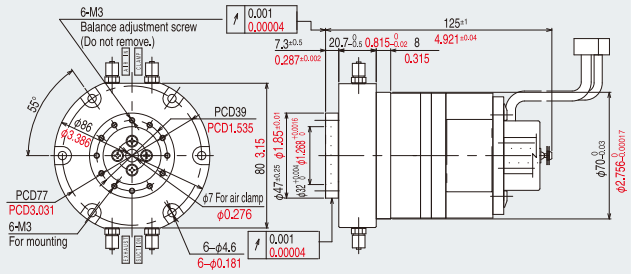

Specifications

Model		SPM30C	SPM30
Supply air pressure		0.5 MPa (G)	0.5 MPa (G)
Maximum rotation speed		20,000 r/min	20,000 r/min
Fluctuation in rotation speed *		0.002% and below (Encoder Z phase jitter)	0.001% and below (Encoder Z phase jitter)
Non-repeatable run-out (NRRO)	Radial	0.003 μm (0.118 μ inch) and below	0.002 μm (0.079 μ inch) and below
	Axial	0.003 μm (0.118 μ inch) and below	0.002 μm (0.079 μ inch) and below
Total indicated run-out (TIR)	Radial	1 μm (39.4 μ inch) and below	1 μm (39.4 μ inch) and below
	Axial	1 μm (39.4 μ inch) and below	1 μm (39.4 μ inch) and below
Rigidity	Radial	12 N/μm (0.068 lb/inch) and above	12 N/μm (0.068 lb/inch) and above
	Axial	30 N/μm (0.175 lb/inch) and above	45 N/μm (0.256 lb/inch) and above
Load capacity	Radial	30 N (6.74 lb) and above	40 N (9 lb) and above
	Axial	90 N (20.2 lb) and above	110 N (24.7 lb) and above
Air consumption		6 Nl/min (0.21 scfm) and below	15 Nl/min (0.53 scfm) and below
Motor capacity		60 W at 20,000 r/min	60 W at 20,000 r/min
Cleanness		Class 10 (0.1 μm)	Class 10 (0.1 μm)
Unbalance force		0.08 gmm and below	0.05 gmm and below
Mass		2.7 kg (5.95 lb)	2.7 kg (5.95 lb)

* Achieved when the air spindle is used with ShinMaywa's non-switching driver NS20.

SPM28 / SPM27H

Accurate rotation air spindles for HDD disk test equipments and other devices





Features

- Crash-proof (SPM28 only)
- Small, light and compatible with high-speed rotation
- Cleanness: Class 10 (0.1 µm)
- Vacuum suction mechanism at the center of the bearing for holding a disk or other workpiece

SPM28

Crash-proof
Conventional motor

Dimensions (Unit: mm/inch)

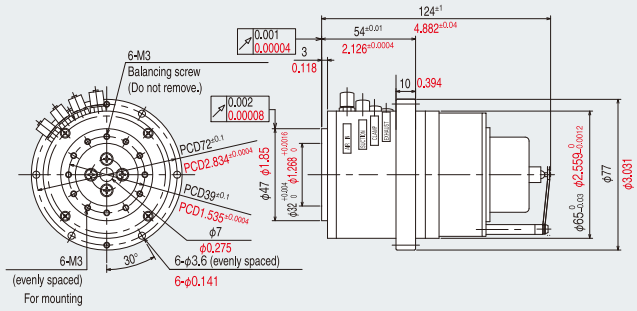

SPM27H

Not crash-proof
Conventional motor

Dimensions (Unit: mm/inch)

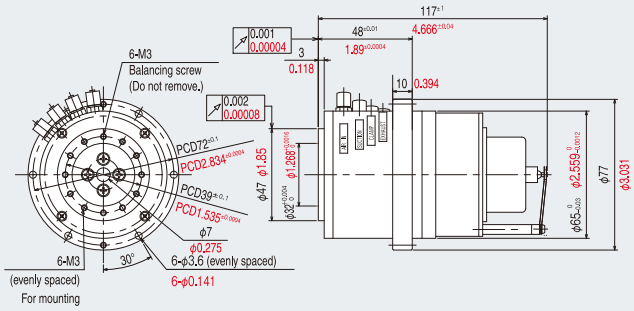

Specifications

Model		SPM28	SPM27H
Supply air pressure		0.4 MPa (G)	0.4 MPa (G)
Maximum rotation speed		15,000 r/min	20,000 r/min
Fluctuation in rotation speed *		0.001% and below (Encoder Z phase jitter)	0.001% and below (Encoder Z phase jitter)
Non-repeatable run-out (NRRO)	Radial	0.005 µm (0.2 µ inch) and below	0.01 µm (0.4 µ inch) and below
	Axial	0.005 µm (0.2 µ inch) and below	0.01 µm (0.4 µ inch) and below
Total indicated run-out (TIR)	Radial	2 µm (78.7 µ inch) and below	2 µm (78.7 µ inch) and below
	Axial	1 µm (39.4 µ inch) and below	1 µm (39.4 µ inch) and below
Rigidity	Radial	9.5 N/µm (0.054 lb/inch) and above	7 N/µm (0.04 lb/inch) and above
	Axial	33 N/µm (0.192 lb/inch) and above	30 N/µm (0.175 lb/inch) and above
Load capacity	Radial	30 N (6.74 lb) and above	26 N (5.84 lb) and above
	Axial	100 N (22.5 lb) and above	90 N (20.23 lb) and above
Air consumption		6 Nl/min (0.21 scfm) and below	10 Nl/min (0.35 scfm) and below
Motor capacity		50 W at 15,000 r/min	65 W at 20,000 r/min
Cleanness		Class 10 (0.1 µm)	Class 10 (0.1 µm)
Unbalance force		0.05 gmm and below	0.05 gmm and below
Mass		2.0 kg (4.41 lb)	2.0 kg (4.41 lb)

* Achieved when the air spindle is used with ShinMaywa's non-switching driver NS20.

For outstanding design flexibility

BUILT-IN DD Series

Air spindle motors



For hard disk test equipments, wafer test equipments, DVD manufacturing equipments, etc.

Motors for precision machine tools

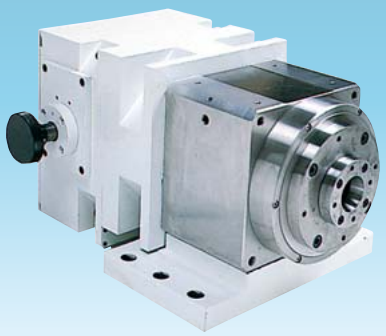

Main spindle motors, feed screw motors, etc.

Direct drive motors



Motors for various industrial robots, various index motors

High vacuum frameless motors



Low leakage for use in high vacuum

Motors with a built-in ball screw

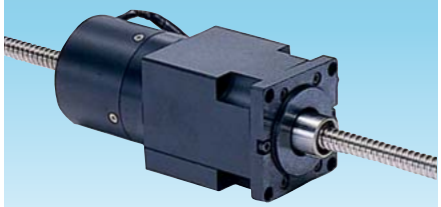

Motors for X-Y tables, motors for electric cylinders, motors for driving carriages, motors for FA equipments, etc.

Specifications and dimensions are subject to change without notice.

ShinMaywa Industries, Ltd.

International Business Management Div.
Industrial Machinery Systems Sales & Marketing Dept.

2-43, Shitte 3-chome, Tsurumi-ku, Yokohama-shi, 230-0003, Japan
Telephone : +81-45-584-1321 Facsimile : +81-45-584-1320
e-mail : overseas@sb.shinmaywa.co.jp

EC98J1072 051
ShinMaywa TAKARAZUKA PLANT
ISO 9001(No.958046)/ISO 14001(No.EC98J1072)

http://www.shinmaywa.co.jp/dd/airspindle_e/index.htm

'10.8. Z-E188

Printed on recycled paper.
Printed in Japan1.1Ⓗ