PRODUCT REVIEW SHEET

IR indoor dome camera

FEATURES

1/3" 520K Sony Super HAD II CCD

700 TV line of resolution

2.8~12mm DC Auto iris lens

24pcs of IR LEDs

Smart IR for better night vision performance

Advanced DNR (Digital Noise Reduction)

D-WDR for clear vivid pictures where strong back-lighting occurs

3 axis Bracket

12vdc



DIMENSION

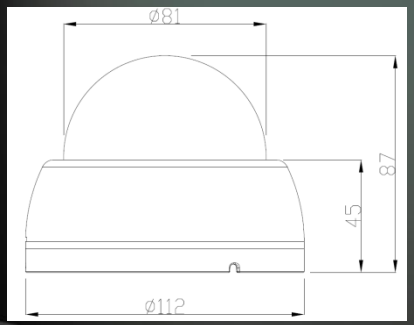

SPECIFICATIONS

Model		SJD23BB1NAIV	SJD23BB1PAIV
Image Sensor		1/3" 520K Sony Super HAD II CCD	
TV System		NTSC	PAL
Number of Pixel	H	976	976
	V	494	582
Scanning Frequency	H	15.734kHz	15.625kHz
	V	59.94Hz	50Hz
Resolution		700 TV lines	
Scanning System		2:1 Interlace	
Video Output		Composite Video 1.0Vp-p/75hm	
S/N Ratio		More than 52dB	
Minimum illuminat0ion		0.1 Lux at F 1.4	
Electronic Shutter		1/60~1/100,000	1/50~1/100,000
Power Source		DC 12V±10%	
Power Consumption		1Watt (IR OFF) / 3 Watt (IR ON)	
Operating Temperature		-10℃ to 50℃	
Operating Humidity		30% to 90%	
Lens		2.8~12mm DC Auto iris lens	
Dimension/mm		Φ81 x 112	
Weight/g		420g	

SJ MICROTECH CO., LTD