www.hkvalve.net



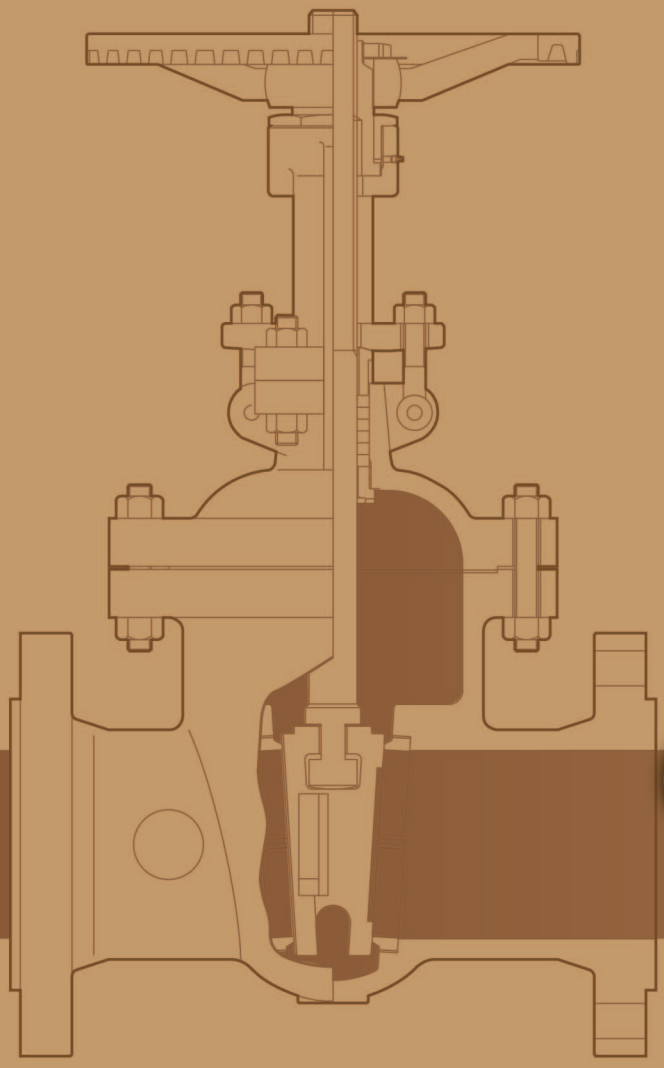

GATE VALVES
BOLTED BONNET

CAST CARBON STEEL
GATE VALVES BOLTED BONNET

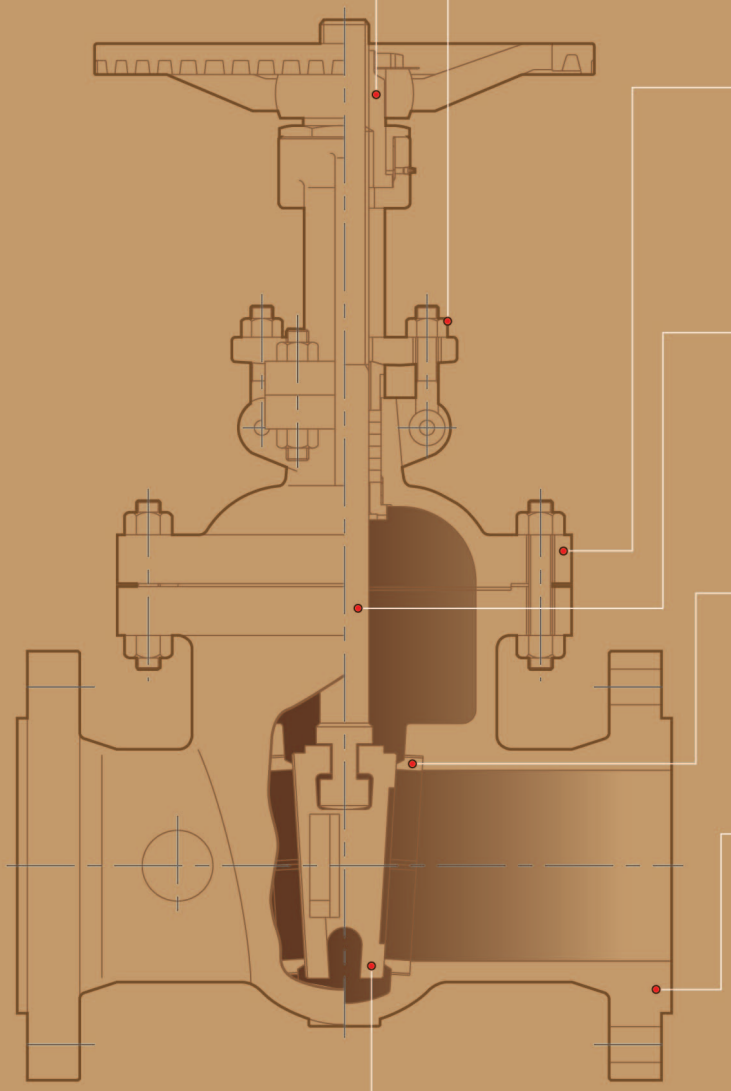

STEM NUT
The upper portion of the Yoke Sleeve is hexagonally tapered to fix hand wheel. The standard material of the Yoke Sleeve is Nodular Ni-resist D2 with over 1150°C(2100°F) dissolution point in accordance with API Std. specifications.

BOLTING
The body-bonnet bolts are manufactured in accordance with API Std. 600 specifications. The nuts also strictly conform with ANSI B 1.1 the stud nuts, hexagonal, rigid and hot-forged, bear material notation as well as do the bolt nuts made according to ANSI B 18.2.2

BONNET
The bonnet and valve body have the same wall thickness.
The body-bonnet flange drilling is spot-faced to exactly meet stud-bolt nuts. The bonnet back seat bushing guarantees packing replacement even when the valve is fully opened. The stem packing dimensions of the stuffing box are in accordance with API specifications.

STEM
The machined forged stem comes with a T-shape head, which connects the slot of the wedge. The Spherically shaped contacting. The stem dimensions are in accordance with API Std. 600 specifications.
The heat treated stem delivers adequate mechanical properties as well as excellent surface hardness. Further, opening/shutting friction is minimized by accurate machining and lapping.

SEAT RING
Bottom seated type seat rings are welded or screwed into the body. The seating surface is finished by lapping. They are forgings that have been heat treated to deliver the best mechanical properties and required hardness. The difference is hardness between seats and wedge is in accordance with API specifications.

BODY
The cast steel body is designed to insure a wall thickness, which is greater at any point than the minimum specified by API Std. 60000. Special care has been taken with the design of the Class 150 valve body so that the elliptically shaped center section is free from intensified stresses in the critical area. The body of above Class 300 are made circular in shape as much as possible to minimize distortion even under extreme operating conditions. Inlet and outlet port dimensions conform with ANSI B 16.5 Pipe Fitting. The welded-in type seat ring is standard to insure interchangeability. Except for Class 150, the standard body-bonnet joint is male and female.

FLEXIBLE WEDGE
The standard disc of our valves is a one-piece flexible wedge.
Slots are machined in both sides of the wedge to allow it to travel correctly in the integrally cast body guides. The wedge seating surfaces have been accurately machined, grind and lapped to a mirror finish to prevent leakage and eliminate galling.

CAST CARBON STEEL

NO	NAME OF PART	ASTM SPECIFICATION						KS SPEC
		STANDARD	HIGH TEMPERATURE SERVICE				LOW TEMP. SERVICE	STANDARD
1	BODY	A216-WCB	A217-WC1	A217-WC6	A217-WC9	A217-C5	A352-LCB	SCPH2
2	BONNET	A216-WCB	A217-WC1	A217-WC6	A217-WC9	A217-C5	A352-LCB	SCPH2
3	*DISC	A217-CA15	A217-WC1	A217-WC6	A217-WC9	A217-C5	A352-LCB	SSC1
4	BODY SEAT RING	C/S1020+HF	A182-F1	A182-F11	A182-F22	A182-F5a	A182-F304	STEEL+HF
5	STEM	A276-410	A276-410	A276-410	A276-410	A276-410	A276-304	STS 410
7	BONNET BUSH	A276-410	A276-410	A276-410	A276-410	A276-410	A276-304	STS 410
8	PACKING GLAND	A276-410	A276-410	A276-410	A276-410	A276-410	A276-304	STS 410
9	GLAND FLANGE	A105/A283-D	A105/A283-D	A105/A283-D	A105/A283-D	A105/A283-D	A105/A283-D	SF45
10	STEM NUT	A439-D2	A439-D2	A439-D2	A439-D2	A439-D2	A439-D2	FCD
11	BONNET BOLT	A193-B7	A193-B7	A193-B7	A193-B16	A193-B16	A320-L7	SNB7
12	BONNET NUT	A194-2H	A194-2H	A194-2H	A194-4	A194-4	A194-4	SM45C
13	GRAND BOLT	A307B	A307B	A307B	A307B	A307B	A307B	SM45C
14	GRAND NUT	A307B	A307B	A307B	A307B	A307B	A307B	SM45C
20	HINGE PIN	A108-1020	A108-1020	A108-1020	A108-1020	A108-1020	A108-1020	SM45C
26	YOKE	A216-WCB	A216-WCB	A216-WCB	A216-WCB	A216-WCB	A216-WCB	SCPH2
27	YOKE BOLT	A193-B7	A193-B7	A193-B7	A193-B7	A193-B7	A193-B7	SNB7
28	YOKE NUT	A192-2H	A192-2H	A192-2H	A192-2H	A192-2H	A192-2H	SM45C

NO	NAME OF PART	ASTM SPECIFICATION
15	**HANDLE NUT**	A 307.B+ZN PLATED
16	**SET SCREW**	A 307.B
17	**SLEEVE GLAND**	STEEL
19	**HANDWHEEL**	A395
21	**PACKING**	SEE PAGE 63
22	**GASKET**	SEE PAGE 63
23	**GREASE NIPPLE**	B16

* Note 1. In case of 12" and larger size, we'll use trim material overlayed one on the same or equivalent material of the Body.



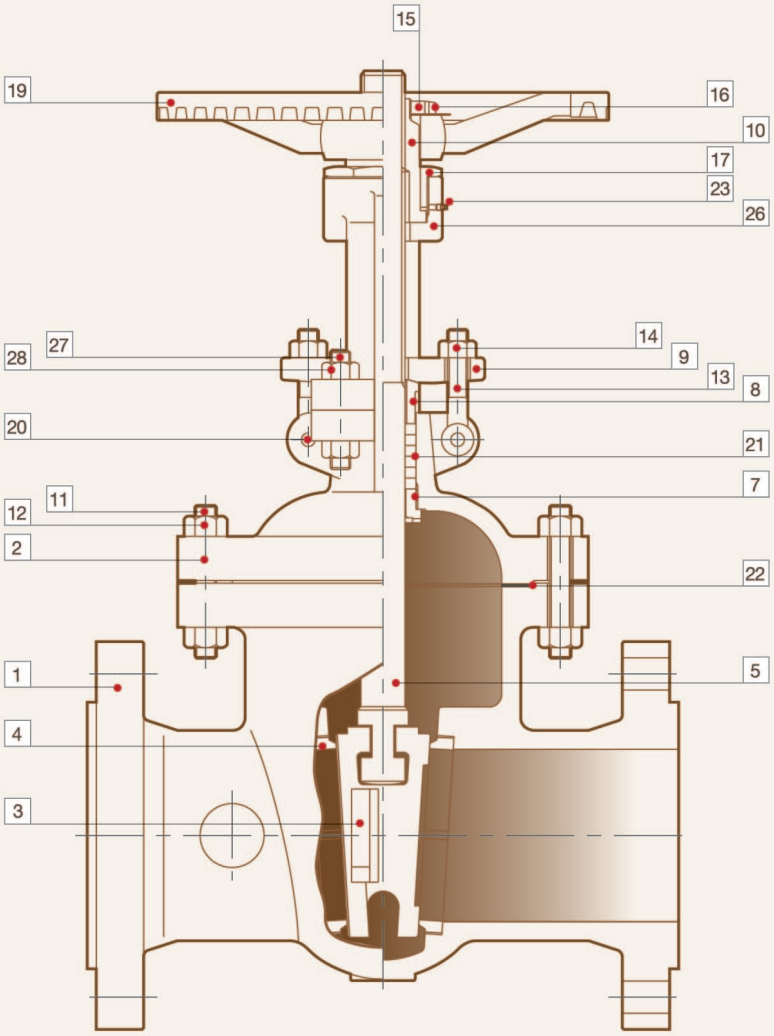

ASME CLASS 150LB

GATE VALVES
BOLTED BONNET
CAST STEEL

VALVE SIZE		2	2 1/2	3	4	5	6	8	10	12	14	16	18	20	24	28	30	36	40
	mm	50	65	80	100	125	150	200	250	300	350	400	450	500	600	700	750	900	1000
L1	inch	7.0	7.5	8.0	9.0	10.0	10.5	11.5	13.0	14.0	15.0	16.0	17.0	18.0	20.0	24.0	24.0	28.0	30.0
	mm	178	191	203	229	254	267	292	330	356	381	406	432	457	508	610	610	711	762
L3	inch		9.5	11.12	12.0	15.0	15.88	46.5	18.0	19.75	22.5	24.0	26.0	28.0	32.0	36.0	36.0	40.4	42.0
	mm	216	241	283	305	381	403	419	457	502	572	610	660	711	813	914	914	1016	1067
H	inch	14.0	16.3	18.4	22.2	26.5	30.0	41.9	50.6	58.3	60.0	68.7	79.1	91.7	109.6	127.4	134.5	161.8	183.9
	mm	356	415	468	565	674	762	1065	1285	1480	1523	1745	2010	2330	2784	3236	3417	4109	4670
W	inch	7.7	7.7	8.5	9.4	11.0	11.8	14.0	15.7	17.7	13.8	13.8	13.8	17.7	17.7	22.0	22.0	27.9	31.5
	mm	195	195	215	240	280	300	355	400	450	350	350	350	450	450	560	560	710	800
L	inch	-	-	-	-	-	-	-	-	-	13.1	13.1	13.1	14.3	14.3	16.3	16.3	18.4	20.7
	mm	-	-	-	-	-	-	-	-	-	332	332	332	362	362	414	414	468	526
WEIGHT	LB	44.1	55.1	66.2	97.0	132.3	154.4	233.7	368.2	526.9	760.7	1080.5	1274.5	1611.9	2280.0	3572.1	4057.2	7497.0	9481.5
	Kg	20	25	30	44	60	70	106	167	239	345	490	578	731	1043	1620	1840	3400	4300

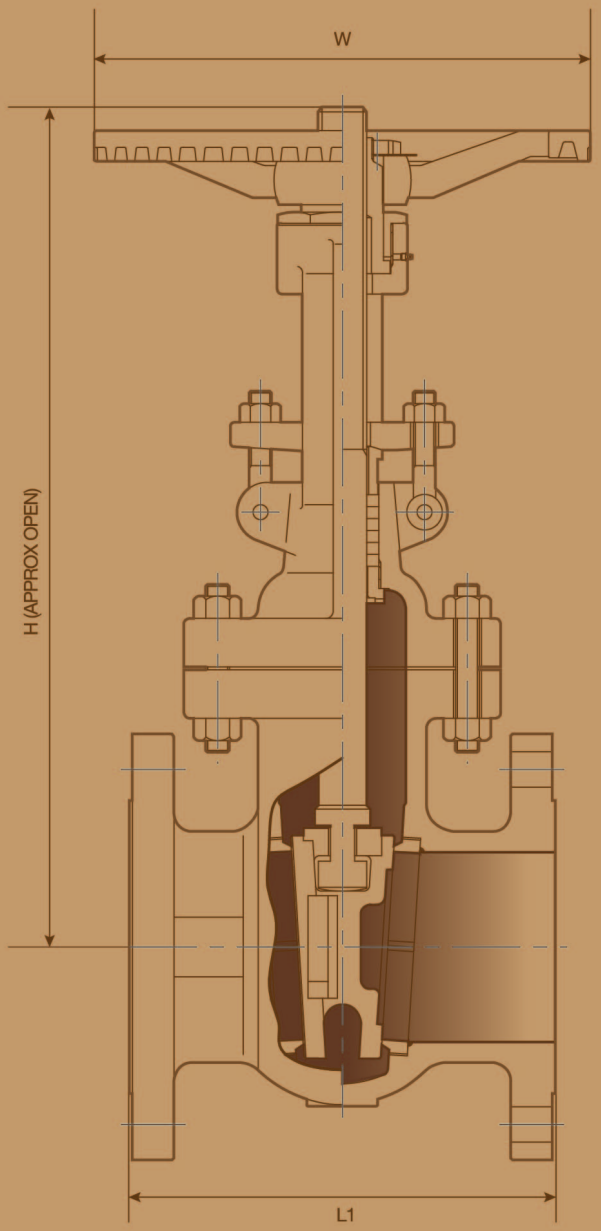

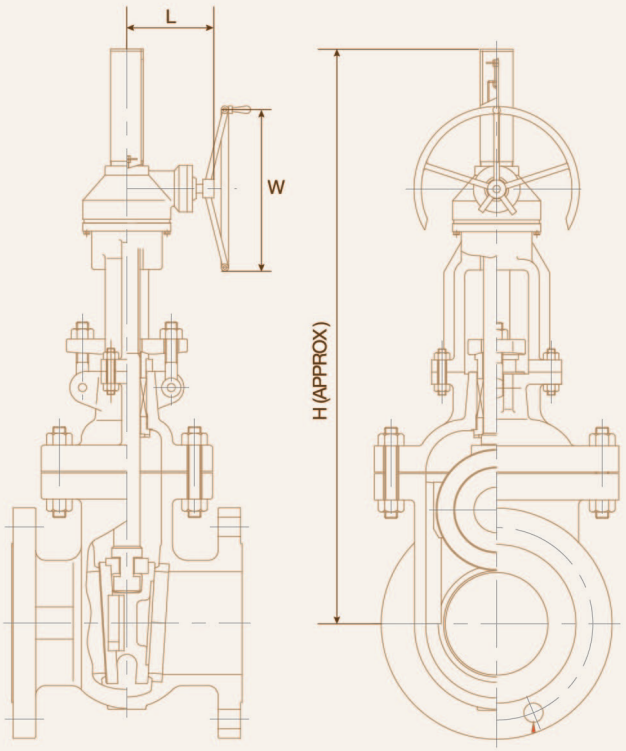

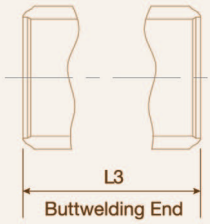

ASME CLASS 300LB

GATE VALVES
BOLTED BONNET
CAST STEEL

VALVE SIZE		2	2 1/2	3	4	5	6	8	10	12	14	16	18	20	24	28	30	36	40	42
		50	65	80	100	125	150	200	250	300	350	400	450	500	600	700	750	900	1000	1050
L1 & L3	inch	8.5	9.5	11.12	12.0	15.0	15.88	16.5	18.0	19.75	30.0	33.0	36.0	39.0	45.0	53.0	55.0	68.0	76.0	78.0
	mm	216	241	293	305	381	403	419	457	502	762	838	914	991	1143	1346	1397	1727	1930	1981
L2	inch	9.12	10.12	11.74	12.62	15.63	16.5	17.12	18.62	20.37	30.62	33.62	36.62	39.75	45.88	54.0	56.0	69.12	-	-
	mm	231.6	257	298	321	397	419	435	473	518	778	854	930	1010	1165	1372	1422	1756	-	-
H	inch	16.3	17.5	20.5	23.2	28.3	33.3	40.4	48.2	61.4	60.0	68.7	79.1	91.7	109.6	130.0	148.5	169.8	188.6	198.1
	mm	415	445	520	590	720	845	1025	1225	1560	1523	1745	2010	2330	2784	3302	3772	4312	4791	5032
W	inch	7.7	7.7	8.5	9.4	11.0	14.0	15.7	17.7	19.7	17.7	17.7	22.0	22.0	27.9	35.4	35.4	30.0	30.0	30.0
	mm	195	195	215	240	280	355	400	450	500	450	450	560	560	710	900	900	760	760	760
L	inch	-	-	-	-	-	-	-	-	-	14.3	14.3	16.3	16.3	18.4	21.8	21.8	21.8	20.2	20.2
	mm	-	-	-	-	-	-	-	-	-	362	36	414	414	468	554	554	554	512	512
WEIGHT	LB	52.9	75.0	90.4	143.3	209.5	257.9	401.3	268.2	1060.6	1528.1	2094.8	2535.8	3307.5	4961.3	6637.1	8595.6	10579.2	15428.0	18734.0
	Kg	24	34	41	65	95	117	182	355	481	693	950	1150	1500	2250	3010	3900	4800	7000	8500

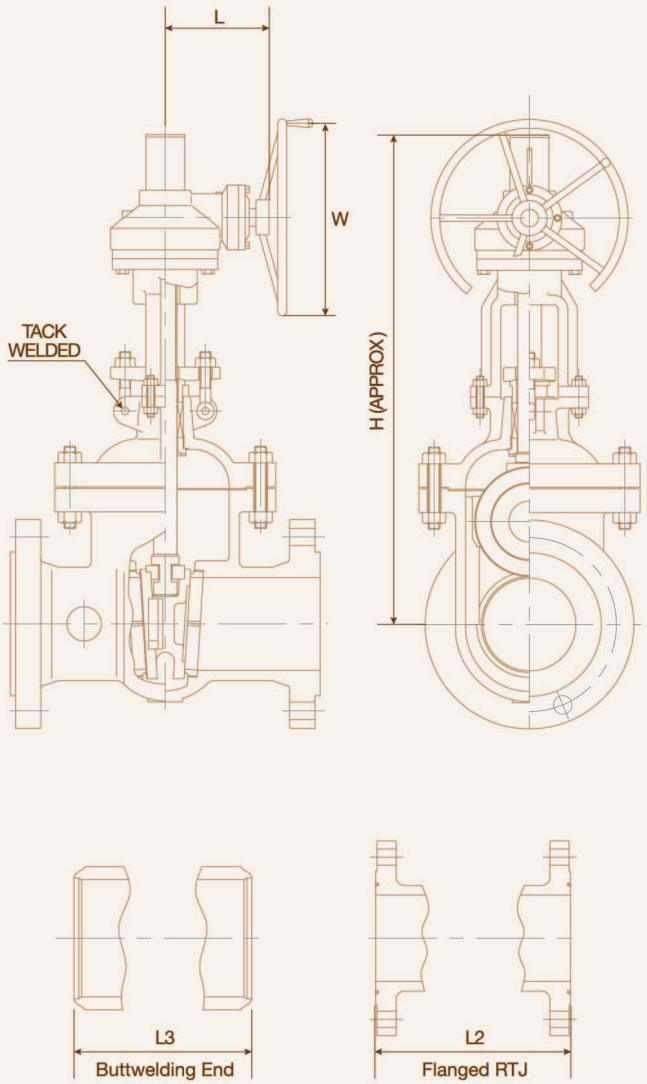

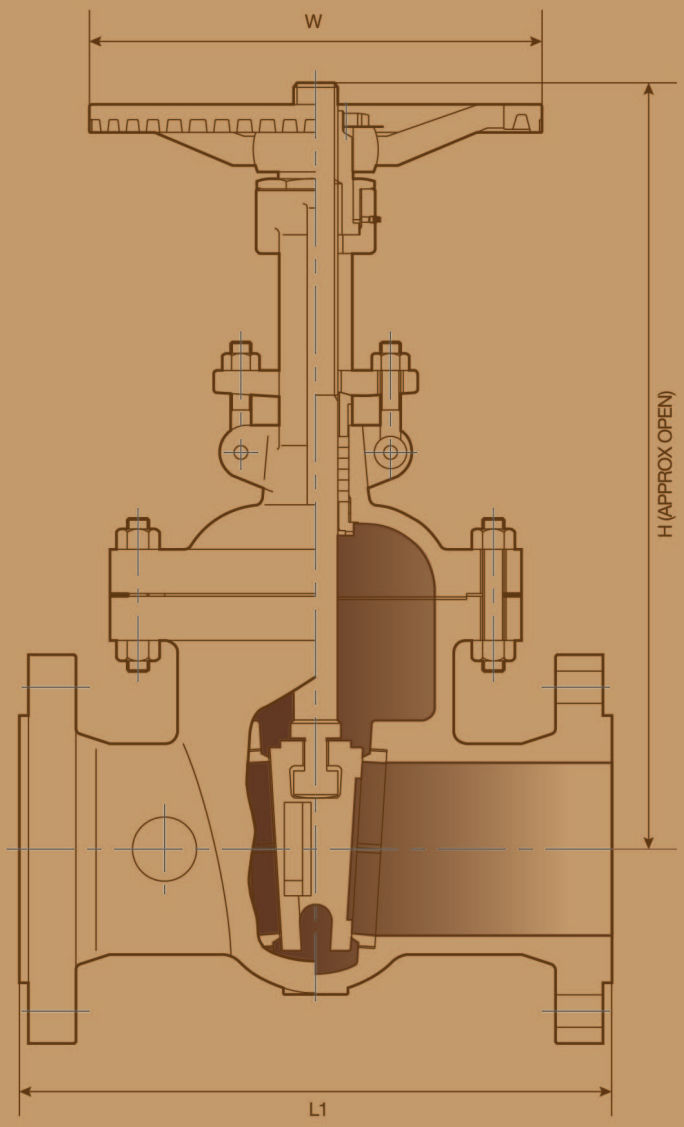

ASME CLASS 600LB

GATE VALVES
BOLTED BONNET
CAST STEEL

VALVE SIZE		2	2 1/2	3	4	5	6	8	10	12	14	16	18	20	24
	mm	50	65	80	100	125	150	200	250	300	350	400	450	500	600
L1 & L3	inch	11.5	13.0	14.0	17.0	20.0	22.0	26.0	31.0	33.0	35.0	39.0	43.0	47.0	55.00
	mm	292	330	356	432	580	556	660	787	838	889	991	1092	1194	1397
L2	inch	11.62	13.12	14.12	17.12	19.57	22.12	26.12	31.12	33.12	35.12	39.12	43.12	47.25	55.38
	mm	295	333	359	435	497	562	664	791	841	892	991	1095	1200	1406
H	inch	18.7	21.6	23.5	26.8	31.5	36.6	45.7	53.1	61.8	72.1	82.9	98.0	104.8	116.9
	mm	475	550	598	680	800	930	1160	1350	1570	1832	2106	2489	2662	2970
W	inch	7.7	7.7	9.4	11.8	14.0	17.7	17.7	19.7	22.0	22.0	27.9	27.9	31.5	35.4
	mm	195	195	240	300	355	450	450	500	560	560	710	710	800	900
L	inch	-	-	-	-	-	-	-	-	16.3	16.3	18.4	18.4	20.7	26.4
	mm	-	-	-	-	-	-	-	-	414	414	468	468	526	670
WEIGHT	LB	79.4	127.9	154.4	269.0	441	551.2	893.0	1433.2	1896.3	2734.2	3109.1	4890.7	6198.3	8656.8
	Kg	36	58	70	122	200	250	405	650	860	1240	1410	2218	2811	3926

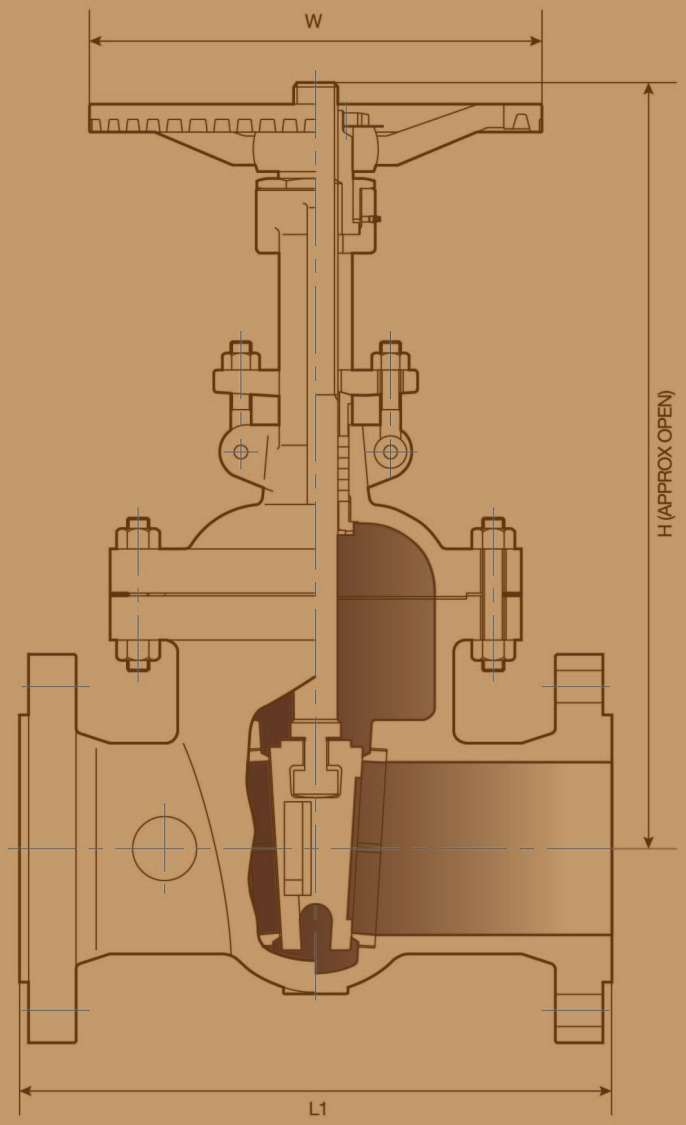

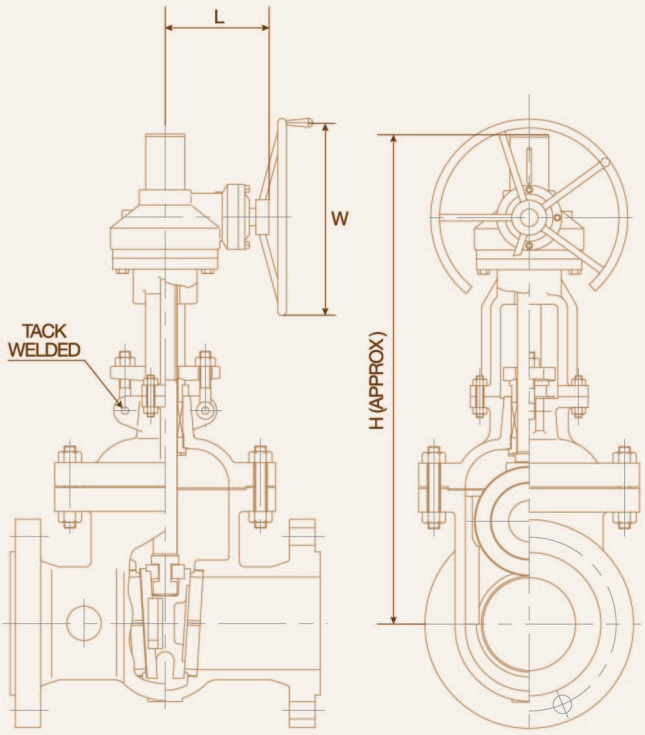

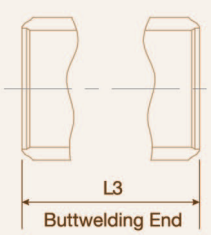

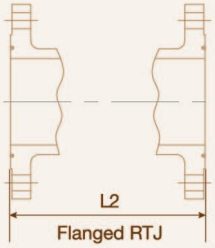

ASME CLASS 900LB

GATE VALVES
BOLTED BONNET
CAST STEEL

VALVE SIZE		2	2 1/2	3	4	5	6	8	10	12	14	16	18	20	24
		50	65	80	100	125	150	200	250	300	350	400	450	500	600
L1 & L3	inch	14.5	16.5	15.0	18.0	22.0	24.0	29.0	33.0	38.0	40.5	44.5	48.0	52.0	61.0
	mm	368	419	381	457	559	610	737	838	965	1029	1130	1219	1321	1549
L2	inch	14.62	16.62	15.12	18.12	22.13	24.12	29.12	33.12	38.12	40.88	44.88	48.5	52.5	61.75
	mm	371	422	384	460	562	613	740	841	968	1038	1140	1232	1334	1568
H	inch	21.2	26.4	26.4	30.8	37.1	42.4	55.5	67.7	77.4	74.9	80.7	88.8	110.2	124.0
	mm	539	670	672	782	943	1076	1411	1720	1965	1902	2051	2256	2800	3150
W	inch	11.8	11.8	14.0	15.7	19.7	22.0	17.7	22.0	22.0	24.0	24.0	30.0	30.0	24.0
	mm	300	300	355	400	500	560	450	560	560	610	610	760	760	610
L	inch	-	-	-	-	-	-	14.3	16.3	16.3	20.0	20.2	21.8	21.8	20.2
	mm	-	-	-	-	-	-	362	414	414	512	512	554	554	512
WEIGHT	LB	181	341.8	364	384	661.5	999	1720	2752	3400	4895.1	6615	8533.4	10716.3	16096.5
	Kg	82	155	165	174	300	453	780	1248	1542	2220	3000	3870	4860	7300

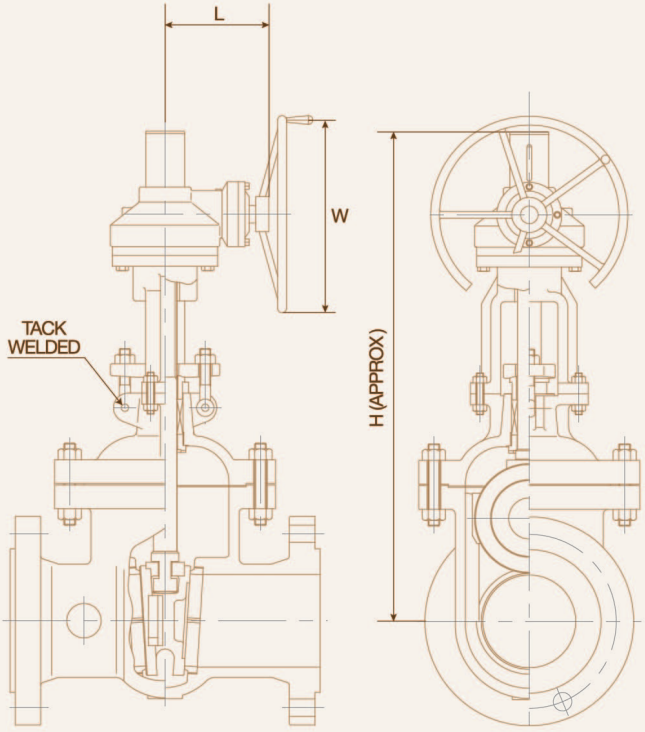

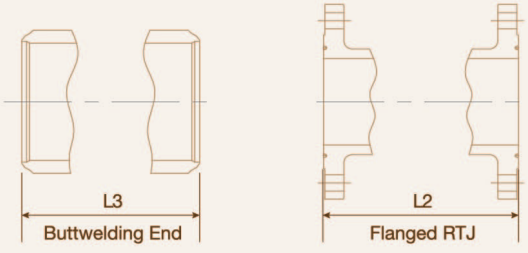

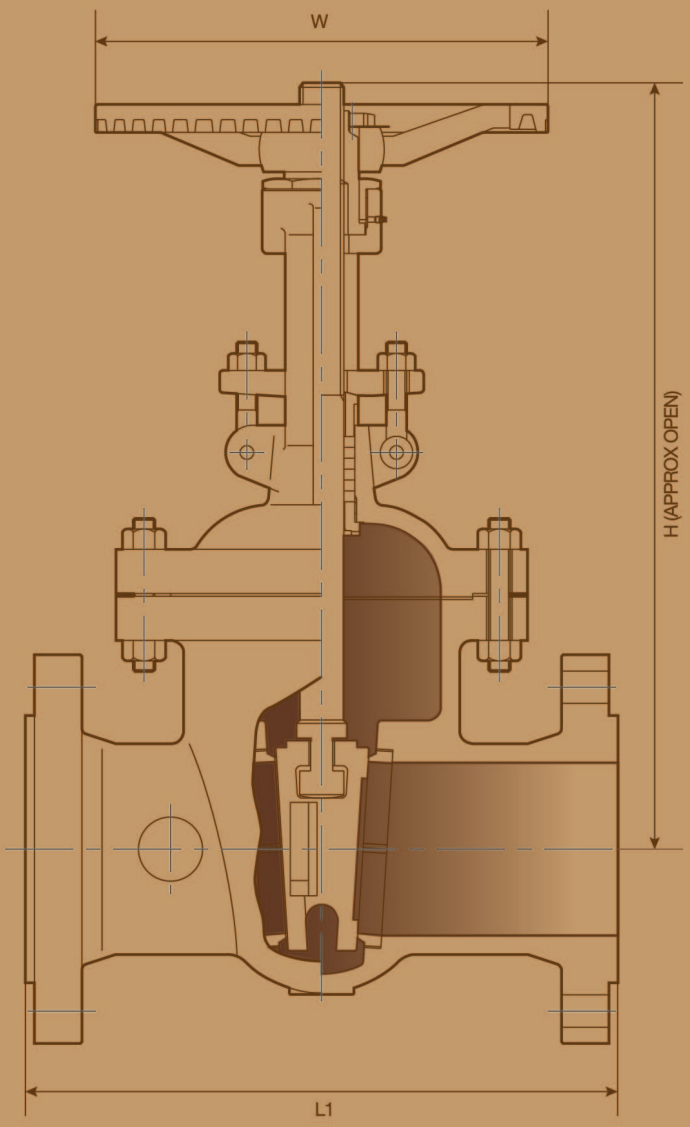

ASME CLASS 1500LB

GATE VALVES
BOLTED BONNET
CAST STEEL

VALVE SIZE		2	2 1/2	3	4	5	6	8	10	12	14	16
		50	65	80	100	125	150	200	250	300	350	400
L1 & L3	inch	14.5	16.5	18.5	21.5	26.5	27.75	32.75	39.0	44.5	49.5	54.5
	mm	368	419	470	546	673	705	832	991	1130	1257	1384
L2	inch	14.62	16.62	18.62	21.62	26.61	28.0	33.13	39.38	45.12	50.25	55.38
	mm	371	422	473	549	676	711	842	1000	1146	1276	1407
H	inch	21.2	26.4	29.1	30.8	43.62	47.0	60.8	66.5	82.3	85.1	97.9
	mm	539	670	738	783	1108	1196	1546	1688	1090	2167	2486
W	inch	11.8	11.8	15.7	19.7	24.8	13.8	22.0	27.9	27.9	30.0	30.0
	mm	300	300	400	500	630	350	560	710	710	760	760
L	inch	-	-	-	-	-	13.1	16.3	18.4	18.4	21.8	21.8
	mm	-	-	-	-	-	332	414	468	468	554	554
WEIGHT	LB	181	341.8	401	573	926.1	1360	3175	4412	8417	9073.6	15324.8
	Kg	82	155	182	260	420	617	1440	2001	3816	4115	6950

