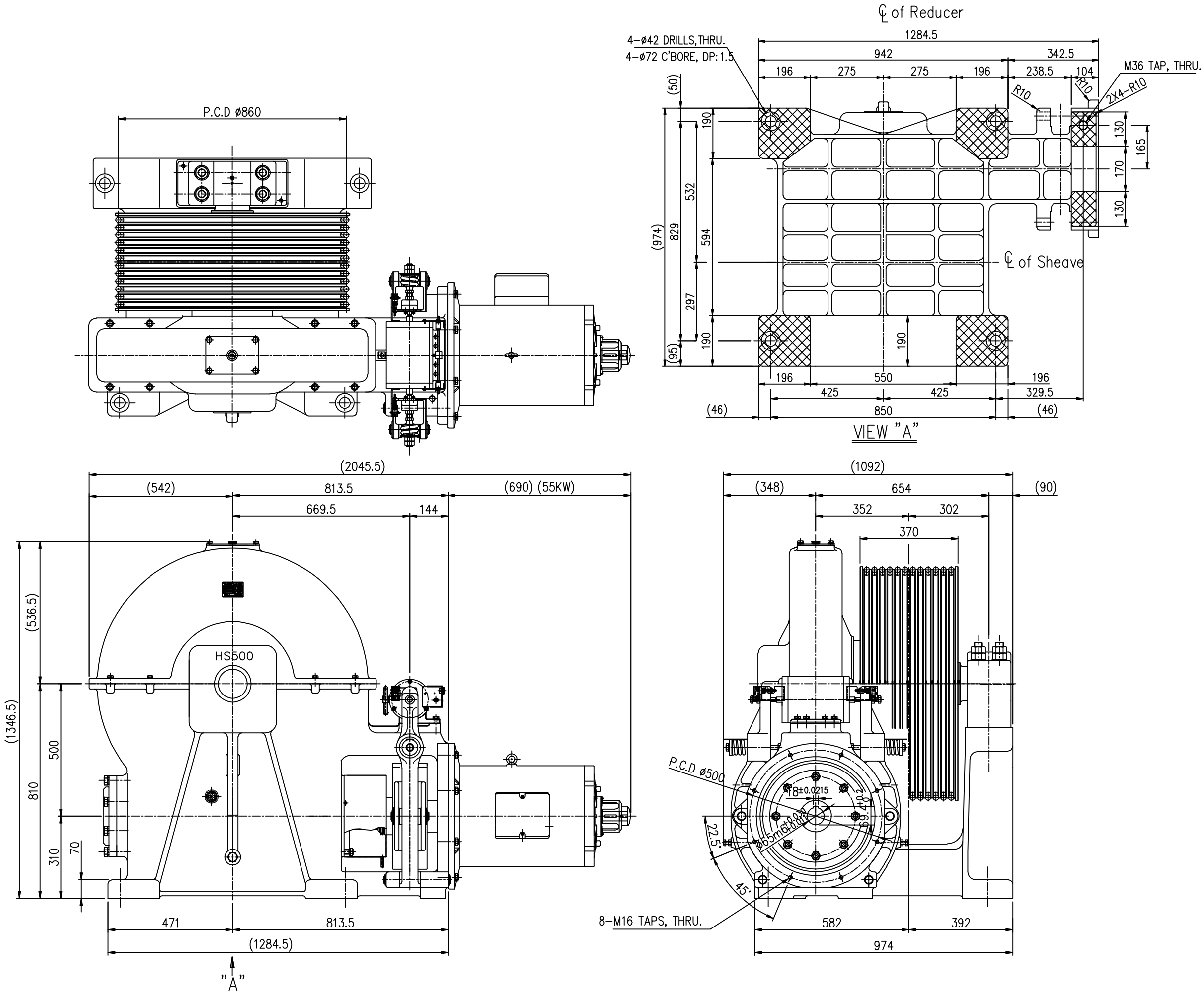
P.C.D ø860
(2045.5)
(542)
813.5
(690) (55KW)
669.5
144
(536.5)
(1346.5)
810
500
310
70
HS500
471
813.5
(1284.5)
"A"
℄ of Reducer
1284.5
4-ø42 DRILLS,THRU.
4-ø72 C'BORE, DP:1.5
942
342.5
196
275
275
196
238.5
104
M36 TAP, THRU.
R10
R10
2X4-R10
(50)
190
532
829
(974)
594
297
190
(95)
130
165
170
130
℄ of Sheave
190
196
550
196
425
425
329.5
(46)
850
(46)
VIEW "A"
(1092)
(348)
654
(90)
352
302
370
P.C.D ø500
18±0.0215
ø65m6+0.021 +0.002
22.5°
45°
8-M16 TAPS, THRU.
582
392
974