TL5630xxxxxx

Specification Datasheet

- Copy right 20150616 / Ver A -

5630

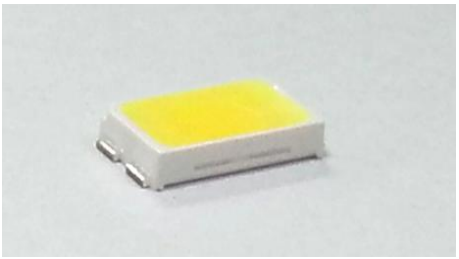

- 0.5W maximum power capability
- High brightness LED
- Dimension : 5.6 x 3.0 x 0.95 mm
- Precondition : JEDEC Level 2a
- Lead-free reflow soldering application
- RoHS compliant

Lumens CO., LTD.
12, Wongomae-ro, Giheung-gu, Yongin-si, Gyeonggi-do, Korea
www.lumensleds.com

LUMENS

Table of Contents

1. Product description 3

2. Absolute maximum ratings 3

3. Electro-optical characteristics(Ta=25℃) 4

4. Electro-optical chart(Ta=25℃) 4

5. Ranks 5

6. Chromaticity diagram & coordinates 6-11

7. Characteristic Graphs(Ta=25℃) 12-13

8. Outline Dimensions 14

9. Circuit Design 15

10. Reliability test items and conditions 15

11. Recommended soldering temperature–time profile for reflow soldering 16

12. Cautions 17-18

LUMENS

1. Product description

(1) Description

- The 5630 series LED is designed for the high power operation to get the high flux output applications.
- It incorporates the state of the art SMD design and high reliable material.
- It is ideal for the light source for general illumination applications, custom designed solutions.

(2) Features

- Maximum drive current up to 150mA
- Low thermal resistance as low as 17℃/W
- Wide viewing angle of 120 degrees
- Precondition JEDEC Level 2a
- RoHS compliant

(3) Applications

- Indoor lighting, Outdoor lighting, Industrial lighting

2. Absolute maximum ratings

Parameters	Symbol	Value	Unit
Power dissipated	Pd	0.5	W
forward current	If	65	mA
Maximum forward current(1)	If max.	150	mA
Maximum junction temperature capability(2)	Tj	110	℃
Electrostatic discharge threshold	ESD	± 5K	V
Operating temperature	Top	-30~85	℃
Storage temperature	Tst	-40~100	℃
Soldering temperature (Reflow)	Tsor	260℃, 10s	℃, s
Soldering temperature (Hand)	Tsoh	320℃, 3s	℃, s

(1) Ip measured at 1/10 duty cycle, 0.1ms pulse width.

(2) Proper current derating must be observed to maintain junction temperature below the maximum.

3. Electro-optical characteristics (Ta=25℃)

Parameters	Symbol	Condition	Typ.	Unit
Luminous Flux	Φv	If=65mA	31	lm
Correlated Color Temperature	CCT	If=65mA	5000	K
Color Rendering Index	CRI	If=65mA	80	Ra
Forward voltage	Vf	If=65mA	2.85	V
Viewing angle FWHM	2θ1/2	If=65mA	120	degree
Thermal resistance junction to solder pad	Rthj-s	If=65mA	17	℃/W

- Parameters are measured by CAS-140 of Instrument System CO.,LTD.
- Lumens maintains a tolerance of ±0.1V on forward voltage measurements.
- Lumens maintains a tolerance of ±3 on CRI measurements.

4. Electro-optical chart (Ta=25℃)

CCT(K)	If(mA)	Vf(V)	Pd(W)	Φv(lm)	lm/W
2700	65	2.86	0.19	29.43	158.44
3000	65	2.86	0.19	31.07	167.24
3500	65	2.86	0.19	31.64	170.19
4000	65	2.86	0.19	32.21	173.40
5000	65	2.86	0.19	33.35	179.56
5700	65	2.86	0.19	32.70	176.04
6500	65	2.86	0.19	31.72	170.76

- Parameters are measured by CAS-140 of Instrument System CO.,LTD.
- Lumens maintains a tolerance of ±7% on flux measurements.
- Lumens maintains a tolerance of ±0.1V on forward voltage measurements.

5. Ranks

Item	Symbol	CCT(K)	Rank	Min.	Typ.	Max.	Unit	Condition
Luminous Flux	Φv	2700 3000 3500 4000	A	24	-	26	lm	65mA
			B	26	-	28		
			C	28	-	30		
			D	30	-	32		
			E	32	-	34		
		5000 5700 6500	A	26	-	28	lm	
			B	28	-	30		
			C	30		32		
			D	32		34		
			E	34	-	36		
Forward Voltage	Vf		1	2.70	-	2.80	V	
			2	2.80	-	2.90		
			3	2.90		3.00		
			4	3.00		3.10		
			5	3.10	-	3.20		

- Parameters measured by CAS-140 of Instrument System CO.,LTD.
- Lumens maintains a tolerance of ±7% on flux measurements.
- Lumens maintains a tolerance of ±0.1V on forward voltage measurements.

LUMENS

6. Chromaticity diagram & coordinates

(1) Cool White

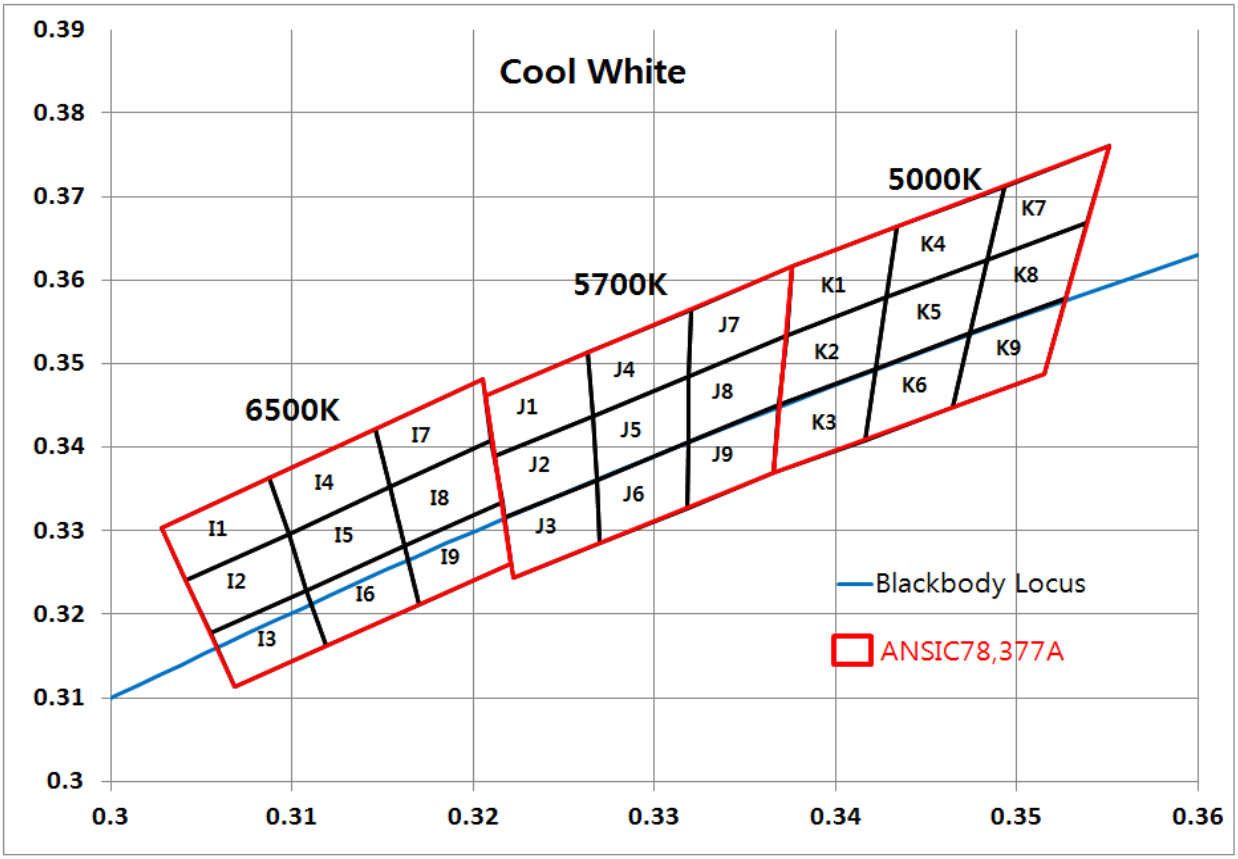

- Lumens maintains a tolerance of ±0.005 on chromaticity (CCx, CCy)

CCT(K)	Region	x	y	Region	x	y	Region	x	y	Region	X	y
6500k	I1	0.3028	0.3304	I2	0.3041	0.3240	I3	0.3055	0.3177	I4	0.3087	0.3363
		0.3087	0.3363		0.3098	0.3296		0.3108	0.3229		0.3146	0.3422
		0.3098	0.3296		0.3108	0.3229		0.3119	0.3162		0.3154	0.3352
		0.3041	0.3240		0.3055	0.3177		0.3068	0.3113		0.3098	0.3296
6500k	I5	0.3098	0.3296	I6	0.3108	0.3229	I7	0.3146	0.3422	I8	0.3154	0.3352
		0.3154	0.3352		0.3162	0.3282		0.3205	0.3481		0.3210	0.3408
		0.3162	0.3282		0.3170	0.3212		0.3210	0.3408		0.3216	0.3334
		0.3108	0.3229		0.3119	0.3162		0.3154	0.3352		0.3162	0.3282
6500k	I9	0.3162	0.3282									
		0.3216	0.3334									
		0.3221	0.3261									
		0.3170	0.3212									

(1) Cool White (Continued)

CCT(K)	Region	x	y	Region	x	y	Region	x	y	Region	x	y
5700k	J1	0.3207	0.3462	J2	0.3212	0.3389	J3	0.3217	0.3316	J4	0.3263	0.3513
		0.3263	0.3513		0.3266	0.3437		0.3268	0.3361		0.3320	0.3565
		0.3266	0.3437		0.3268	0.3361		0.3270	0.3285		0.3319	0.3485
		0.3212	0.3389		0.3217	0.3316		0.3222	0.3243		0.3266	0.3437
5700k	J5	0.3266	0.3437	J6	0.3268	0.3361	J7	0.3320	0.3565	J8	0.3319	0.3485
		0.3319	0.3485		0.3319	0.3406		0.3376	0.3616		0.3373	0.3534
		0.3319	0.3406		0.3318	0.3327		0.3373	0.3534		0.3369	0.3451
		0.3268	0.3361		0.3270	0.3285		0.3319	0.3485		0.3319	0.3406
5700k	J9	0.3319	0.3406									
		0.3369	0.3451									
		0.3366	0.3369									
		0.3318	0.3327									
5000k	K1	0.3376	0.3616	K2	0.3373	0.3534	K3	0.3369	0.3451	K4	0.3434	0.3664
		0.3434	0.3664		0.3428	0.3579		0.3422	0.3494		0.3493	0.3712
		0.3428	0.3579		0.3422	0.3494		0.3416	0.3408		0.3484	0.3624
		0.3373	0.3534		0.3369	0.3451		0.3366	0.3369		0.3428	0.3579
5000k	K5	0.3428	0.3579	K6	0.3422	0.3494	K7	0.3493	0.3712	K8	0.3484	0.3624
		0.3484	0.3624		0.3474	0.3536		0.3551	0.3760		0.3539	0.3669
		0.3474	0.3536		0.3465	0.3448		0.3539	0.3669		0.3527	0.3578
		0.3422	0.3494		0.3416	0.3408		0.3484	0.3624		0.3474	0.3536
5000k	K9	0.3474	0.3536									
		0.3527	0.3578									
		0.3515	0.3487									
		0.3465	0.3448									

LUMENS

(2) Neutral White

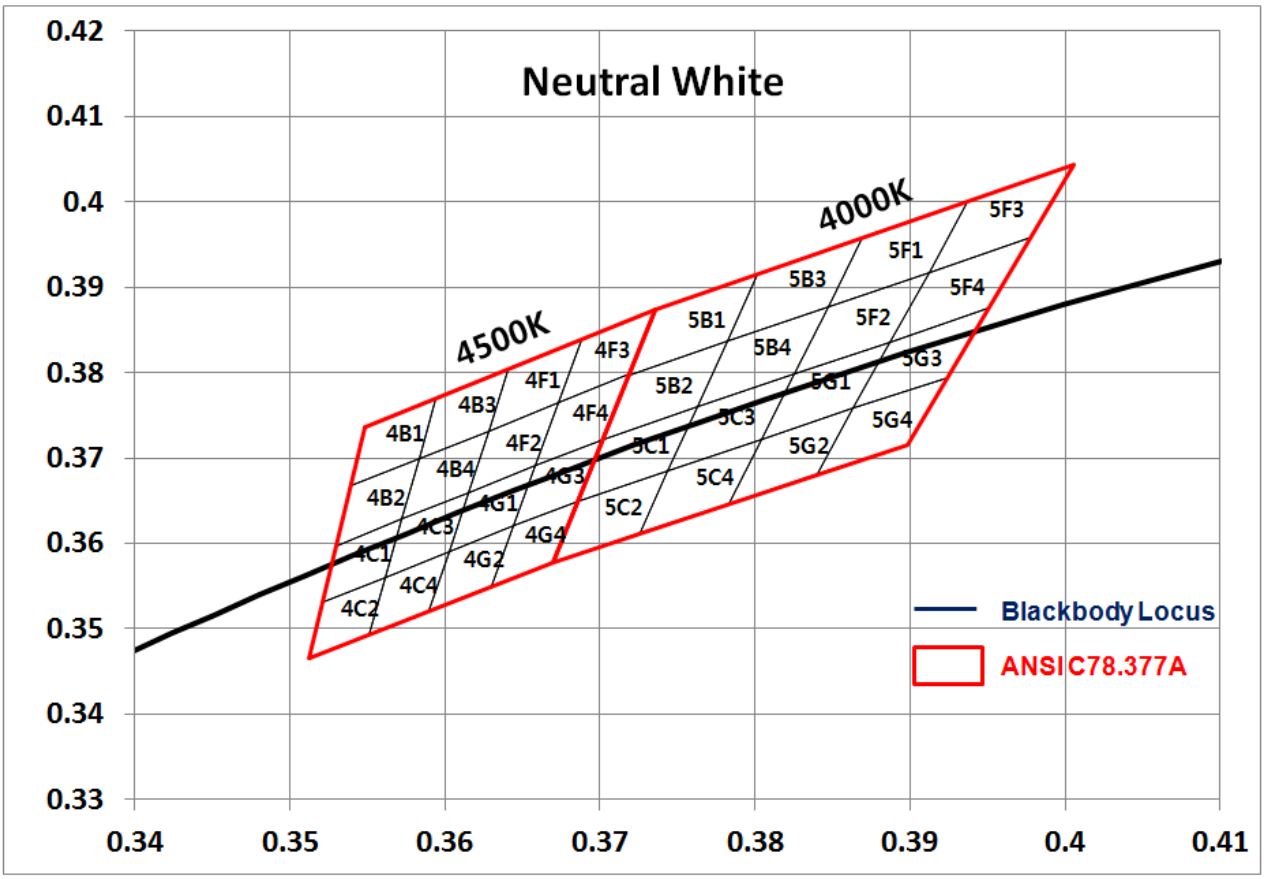

- Lumens maintains a tolerance of ±0.005 on chromaticity (CCx, CCy)

CCT(K)	Region	x	y	Region	x	y	Region	x	y	Region	x	y
4500K	4B1	0.3539	0.3667	4B2	0.3530	0.3597	4B3	0.3584	0.3699	4B4	0.3573	0.3628
		0.3548	0.3736		0.3539	0.3667		0.3595	0.3770		0.3584	0.3699
		0.3595	0.3770		0.3584	0.3699		0.3641	0.3804		0.3628	0.3732
		0.3584	0.3699		0.3573	0.3628		0.3628	0.3732		0.3615	0.3659
4500K	4C1	0.3521	0.3531	4C2	0.3512	0.3465	4C3	0.3562	0.3561	4C4	0.3551	0.3493
		0.3530	0.3597		0.3521	0.3531		0.3573	0.3628		0.3562	0.3561
		0.3573	0.3628		0.3562	0.3561		0.3615	0.3659		0.3603	0.3590
		0.3562	0.3561		0.3551	0.3493		0.3603	0.3590		0.3590	0.3521
4500K	4F1	0.3628	0.3732	4F2	0.3615	0.3659	4F3	0.3674	0.3765	4F4	0.3659	0.3691
		0.3641	0.3804		0.3628	0.3732		0.3689	0.3839		0.3674	0.3765
		0.3689	0.3839		0.3674	0.3765		0.3736	0.3874		0.3719	0.3798
		0.3674	0.3765		0.3659	0.3691		0.3719	0.3798		0.3702	0.3722

(2) Neutral White (continued)

CCT(K)	Region	x	y	Region	x	y	Region	x	y	Region	x	y
4500K	4G1	0.3603	0.3590	4G2	0.3590	0.3521	4G3	0.3644	0.3620	4G4	0.3630	0.3550
		0.3615	0.3659		0.3603	0.3590		0.3659	0.3691		0.3644	0.3620
		0.3659	0.3691		0.3644	0.3620		0.3702	0.3722		0.3686	0.3650
		0.3644	0.3620		0.3630	0.3550		0.3686	0.3650		0.3670	0.3578
4000K	5B1	0.3719	0.3797	5B2	0.3702	0.3722	5B3	0.3782	0.3837	5B4	0.3763	0.3760
		0.3736	0.3874		0.3719	0.3797		0.3802	0.3916		0.3782	0.3837
		0.3802	0.3916		0.3782	0.3837		0.3869	0.3958		0.3847	0.3877
		0.3782	0.3837		0.3763	0.3760		0.3847	0.3877		0.3825	0.3798
4000K	5C1	0.3686	0.3649	5C2	0.3670	0.3578	5C3	0.3744	0.3685	5C4	0.3726	0.3612
		0.3702	0.3722		0.3686	0.3649		0.3763	0.3760		0.3744	0.3685
		0.3763	0.3760		0.3744	0.3685		0.3825	0.3798		0.3804	0.3721
		0.3744	0.3685		0.3726	0.3612		0.3804	0.3721		0.3783	0.3646
4000K	5F1	0.3847	0.3877	5F2	0.3825	0.3798	5F3	0.3912	0.3917	5F4	0.3887	0.3836
		0.3869	0.3958		0.3847	0.3877		0.3937	0.4001		0.3912	0.3917
		0.3937	0.4001		0.3912	0.3917		0.4006	0.4044		0.3978	0.3958
		0.3912	0.3917		0.3887	0.3836		0.3978	0.3958		0.3950	0.3875
4000K	5G1	0.3804	0.3721	5G2	0.3783	0.3646	5G3	0.3863	0.3758	5G4	0.3840	0.3681
		0.3825	0.3798		0.3804	0.3721		0.3887	0.3836		0.3863	0.3758
		0.3887	0.3836		0.3863	0.3758		0.3950	0.3875		0.3924	0.3794
		0.3863	0.3758		0.3840	0.3681		0.3924	0.3794		0.3898	0.3716

LUMENS

(3) Warm White

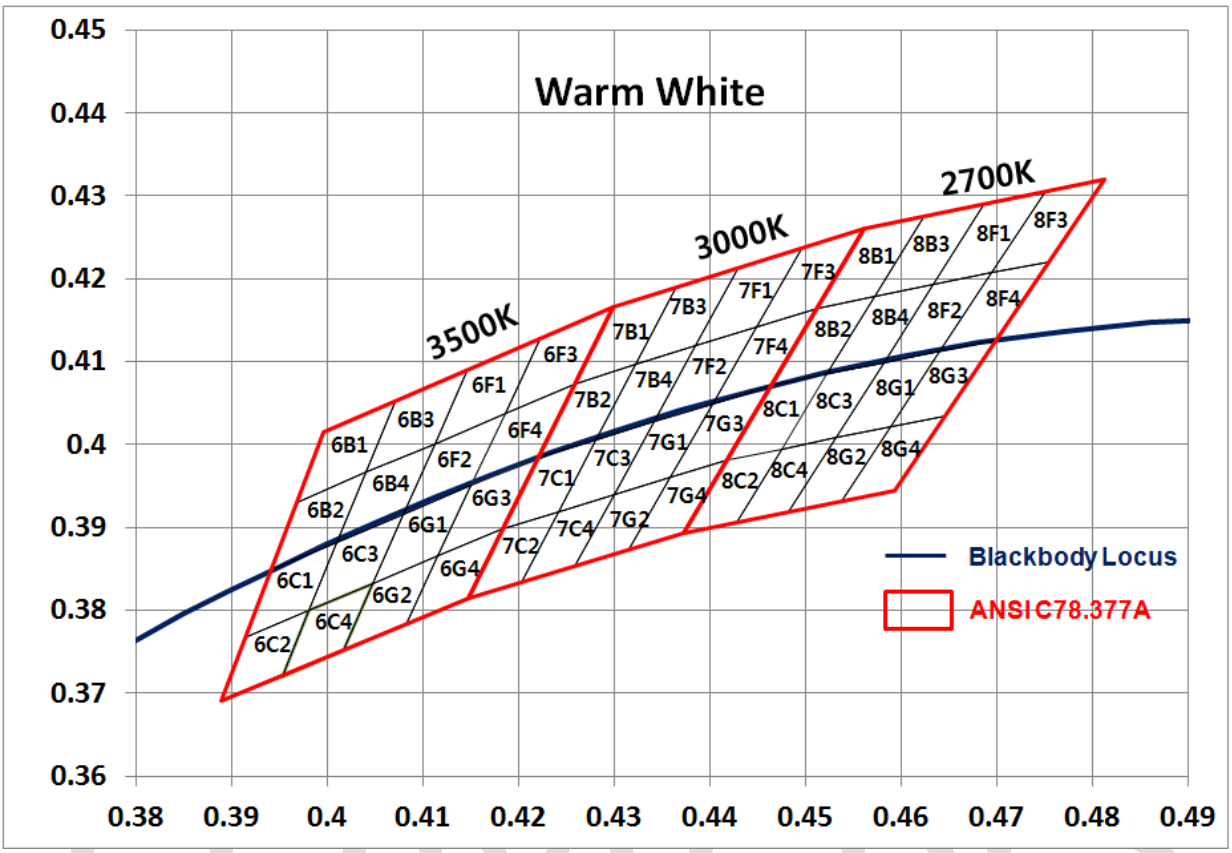

- Lumens maintains a tolerance of ±0.005 on chromaticity (CCx, CCy)

CCT(K)	Region	x	y	Region	x	y	Region	x	y	Region	x	y
3500K	6B1	0.3968	0.3930	6B2	0.3941	0.3848	6B3	0.4040	0.3966	6B4	0.4010	0.3882
		0.3996	0.4015		0.3968	0.3930		0.4071	0.4052		0.4040	0.3966
		0.4071	0.4052		0.4040	0.3966		0.4146	0.4089		0.4113	0.4001
		0.4040	0.3966		0.4010	0.3882		0.4113	0.4001		0.4080	0.3916
3500K	6C1	0.3915	0.3768	6C2	0.3889	0.3690	6C3	0.3981	0.3800	6C4	0.3981	0.3800
		0.3941	0.3848		0.3915	0.3768		0.4010	0.3882		0.3953	0.3720
		0.4010	0.3882		0.3981	0.3800		0.4080	0.3916		0.4017	0.3751
		0.3981	0.3800		0.3953	0.3720		0.4048	0.3832		0.4048	0.3832
3500K	6F1	0.4113	0.4001	6F2	0.4080	0.3916	6F3	0.4186	0.4037	6F4	0.4150	0.3950
		0.4146	0.4089		0.4113	0.4001		0.4222	0.4127		0.4186	0.4037
		0.4222	0.4127		0.4186	0.4037		0.4299	0.4165		0.4259	0.4073
		0.4186	0.4037		0.4150	0.3950		0.4259	0.4073		0.4221	0.3984

(3) Warm White (continued)

CCT(K)	Region	x	y	Region	x	y	Region	x	y	Region	x	y
3500K	6G1	0.4048	0.3832	6G2	0.4017	0.3751	6G3	0.4116	0.3865	6G4	0.4082	0.3782
		0.4080	0.3916		0.4048	0.3832		0.4150	0.3950		0.4116	0.3865
		0.4150	0.3950		0.4116	0.3865		0.4221	0.3984		0.4183	0.3898
		0.4116	0.3865		0.4082	0.3782		0.4183	0.3898		0.4147	0.3814
3000K	7B1	0.4259	0.4073	7B2	0.4221	0.3984	7B3	0.4322	0.4096	7B4	0.4281	0.4006
		0.4299	0.4165		0.4259	0.4073		0.4364	0.4188		0.4322	0.4096
		0.4364	0.4188		0.4322	0.4096		0.4430	0.4212		0.4385	0.4119
		0.4322	0.4096		0.4281	0.4006		0.4385	0.4119		0.4342	0.4028
3000K	7C1	0.4183	0.3898	7C2	0.4147	0.3814	7C3	0.4242	0.3919	7C4	0.4203	0.3833
		0.4221	0.3984		0.4183	0.3898		0.4281	0.4006		0.4242	0.3919
		0.4281	0.4006		0.4242	0.3919		0.4342	0.4028		0.4300	0.3939
		0.4242	0.3919		0.4203	0.3833		0.4300	0.3939		0.4259	0.3853
3000K	7F1	0.4385	0.4119	7F2	0.4342	0.4028	7F3	0.4449	0.4141	7F4	0.4403	0.4049
		0.4430	0.4212		0.4385	0.4119		0.4496	0.4236		0.4449	0.4141
		0.4496	0.4236		0.4449	0.4141		0.4562	0.4260		0.4513	0.4164
		0.4449	0.4141		0.4403	0.4049		0.4513	0.4164		0.4465	0.4071
3000K	7G1	0.4300	0.3939	7G2	0.4259	0.3853	7G3	0.4359	0.3960	7G4	0.4316	0.3873
		0.4342	0.4028		0.4300	0.3939		0.4403	0.4049		0.4359	0.3960
		0.4403	0.4049		0.4359	0.3960		0.4465	0.4071		0.4418	0.3981
		0.4359	0.3960		0.4316	0.3873		0.4418	0.3981		0.4373	0.3893
2700K	8B1	0.4513	0.4164	8B2	0.4465	0.4071	8B3	0.4573	0.4178	8B4	0.4523	0.4085
		0.4562	0.4260		0.4513	0.4164		0.4624	0.4274		0.4573	0.4178
		0.4624	0.4274		0.4573	0.4178		0.4687	0.4289		0.4634	0.4193
		0.4573	0.4178		0.4523	0.4085		0.4634	0.4193		0.4582	0.4099
2700K	8C1	0.4418	0.3981	8C2	0.4373	0.3893	8C3	0.4475	0.3994	8C4	0.4428	0.3906
		0.4465	0.4071		0.4418	0.3981		0.4523	0.4085		0.4475	0.3994
		0.4523	0.4085		0.4475	0.3994		0.4582	0.4099		0.4532	0.4008
		0.4475	0.3994		0.4428	0.3906		0.4532	0.4008		0.4483	0.3919
2700K	8F1	0.4634	0.4193	8F2	0.4582	0.4099	8F3	0.4695	0.4207	8F4	0.4641	0.4112
		0.4687	0.4289		0.4634	0.4193		0.4750	0.4304		0.4695	0.4207
		0.4750	0.4304		0.4695	0.4207		0.4813	0.4319		0.4756	0.4221
		0.4695	0.4207		0.4641	0.4112		0.4756	0.4221		0.4700	0.4126
2700K	8G1	0.4532	0.4008	8G2	0.4483	0.3919	8G3	0.4589	0.4021	8G4	0.4538	0.3931
		0.4582	0.4099		0.4532	0.4008		0.4641	0.4112		0.4589	0.4021
		0.4641	0.4112		0.4589	0.4021		0.4700	0.4126		0.4646	0.4034
		0.4589	0.4021		0.4538	0.3931		0.4646	0.4034		0.4593	0.3944

7. Characteristic Graphs(Ta=25℃)

(1) Typical Forward Current vs. Forward Voltage

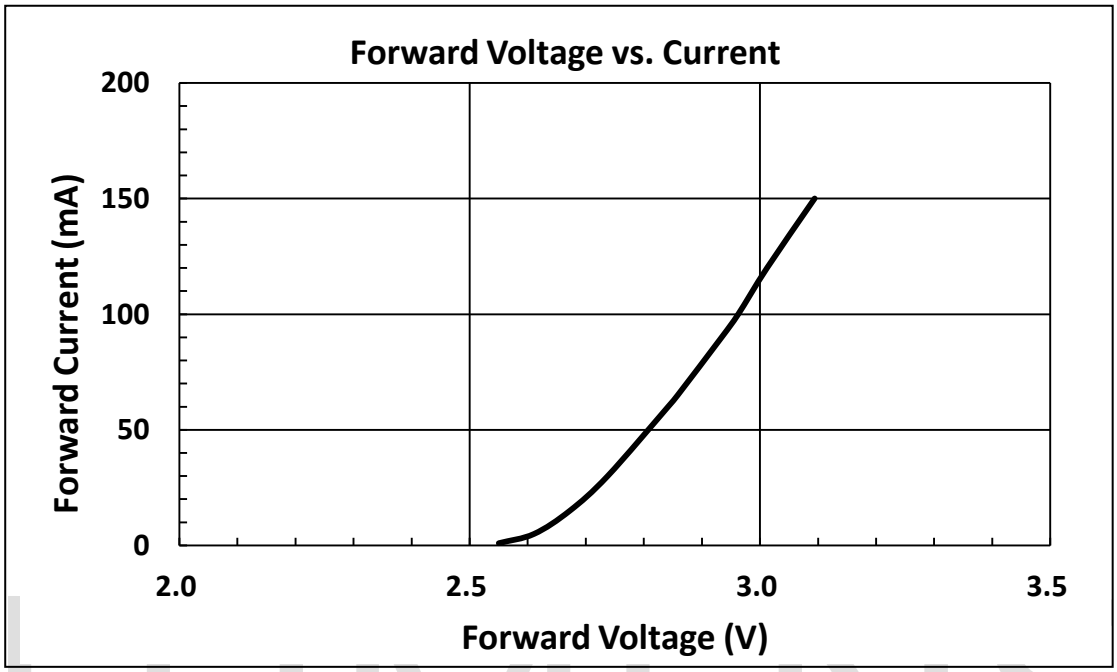

LUMENS

(2) Typical Forward Current vs. Relative Luminous Flux

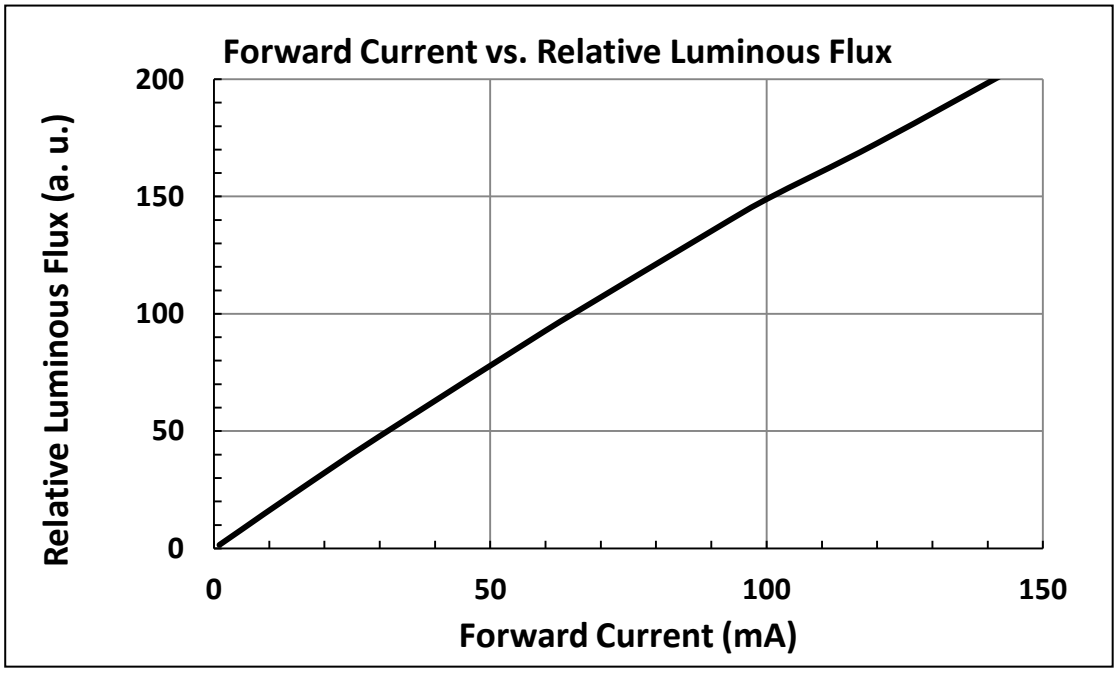

(3) Typical Wavelength vs. Relative Emission Intensity

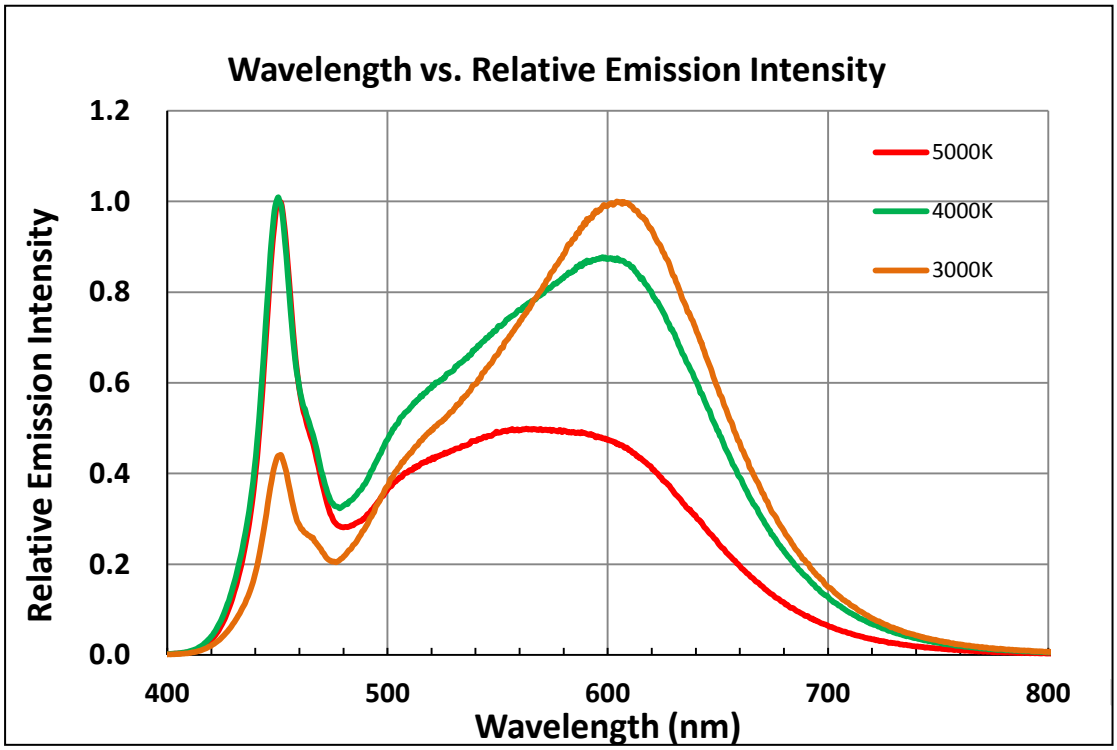

LUMENS

(4) Typical Spatial Radiation Characteristic

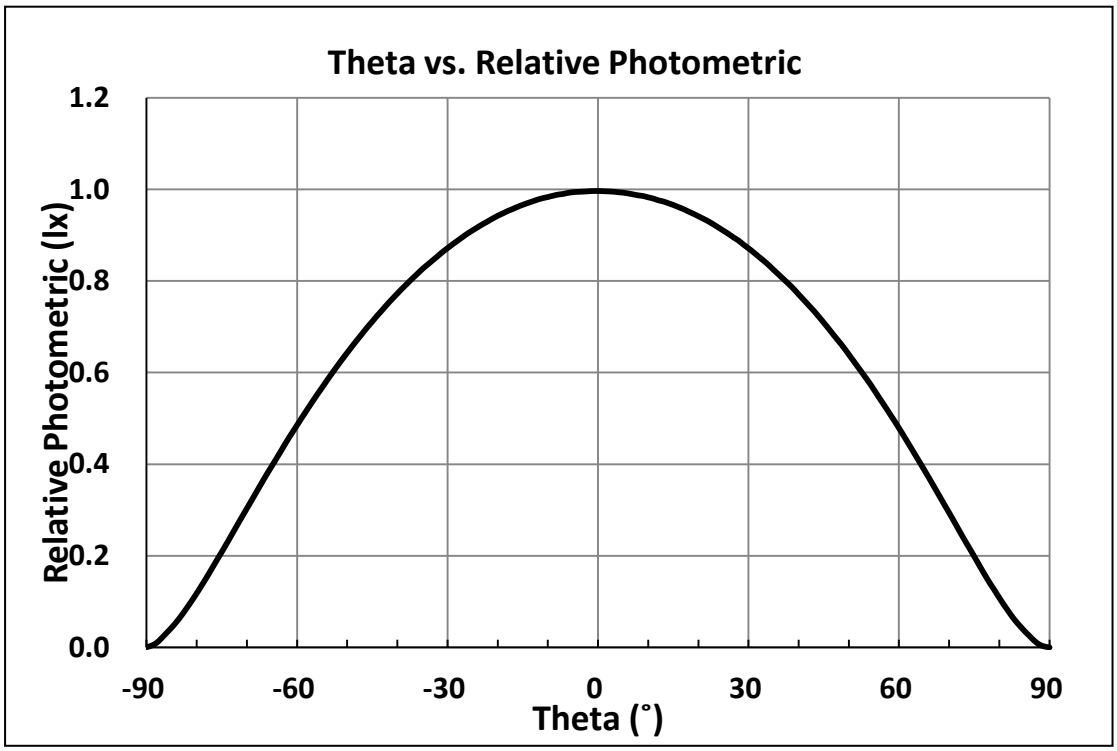

8. Outline Dimensions

- Package outline (Width x Length x Height) of 5.6 x 3.0 x 0.95mm
- Undefined tollerance is ± 0.15 mm

(Unit : mm)

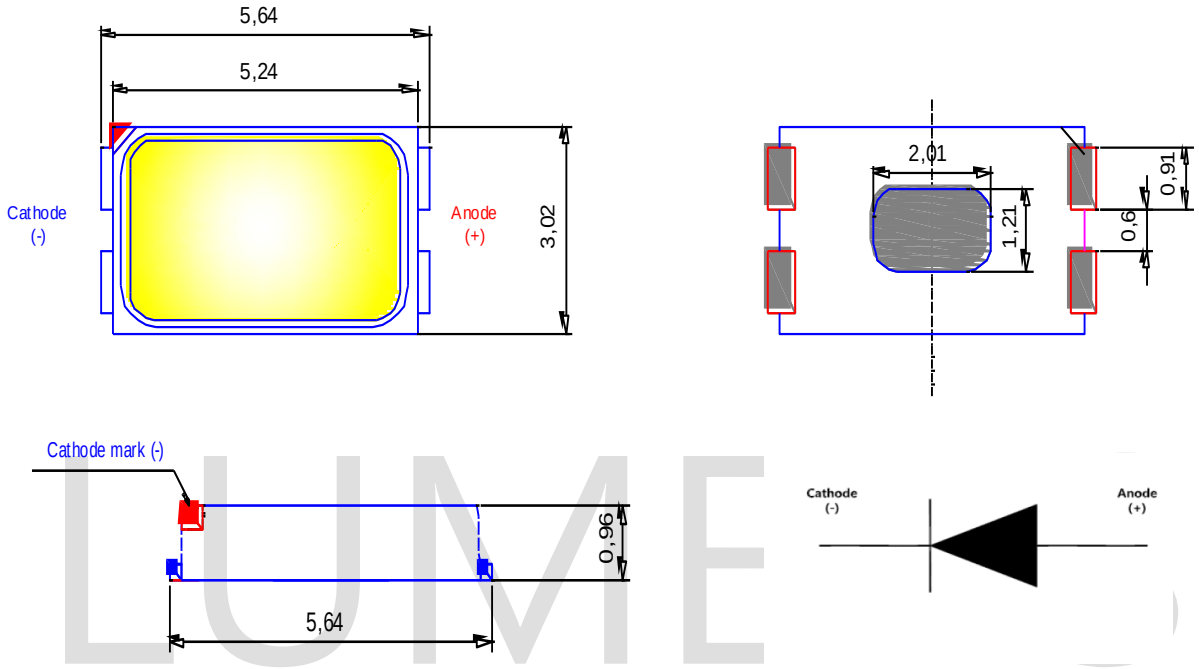

[Recommended PCB Solder Pad]

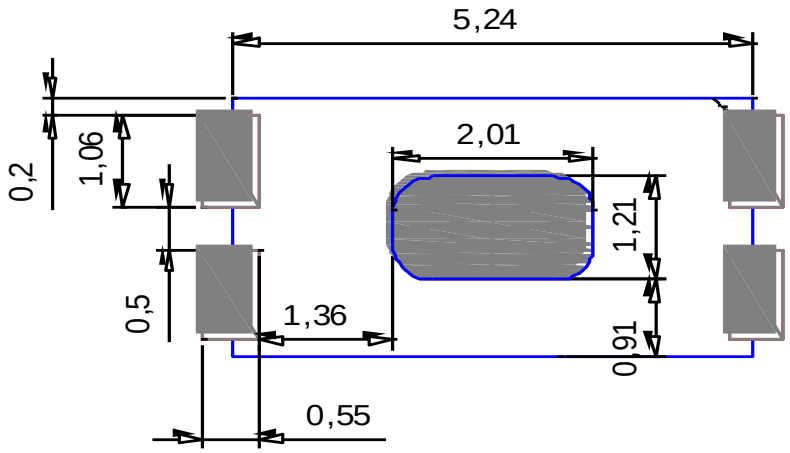

9. Circuit Design

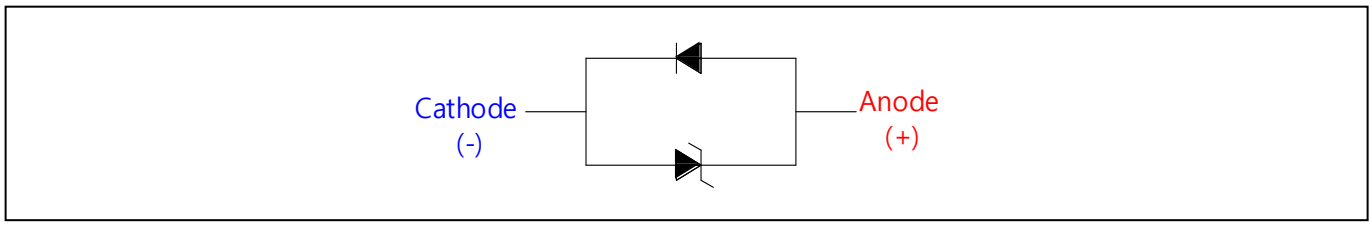

10. Reliability test items and conditions

Item	Reference	Test Conditions	Duration Cycle	Number of Damaged
Thermal Shock	EIAJ ED-4701	Ta =-40℃ (30min) ~ 100℃ (30min)	150 Cycle	0/22
Operating Endurance Test	Internal Reference	Ta =25℃, IF = 150mA	1000 Hours	0/22
High Temperature High Humidity Life Test	Internal Reference	Ta =60℃, RH=90%, IF = 150mA	500 Hours	0/22
High Temperature High Humidity Life Test	Internal Reference	Ta =85℃, RH=85%, IF = 65mA	500 Hours	0/22
High Temperature Life Test	Internal Reference	Ta =70℃, IF = 150mA	500 Hours	0/22
High Temperature Life Test	Internal Reference	Ta =85℃, IF = 120mA	500 Hours	0/22
Electro-Static Discharge	-	Up to 8KV	3 Time	0/22
Reflow	Tsor	240℃< 10sec, Reflow Soldering	3 Time	0/22

(1) Criteria for judging the damage

Item	Symbol	Condition	Criteria for Judgment	
			MIN	MAX
Forward Voltage	Vf	If =65mA	-	USL (1) × 1.1
Luminous Intensity	Iv	If =65mA	LSL (2) × 0.7	-

- USL : Upper Standard Level
- LSL : Lower Standard Level

11. Recommended soldering temperature – time profile for reflow soldering

(1) Reflow Conditions (Pb Free)

In case of soldering LED product, interface detachment can take place depending on moisture absorption status of the resin.

It is well-known that vaporization expansion of the absorbed moisture due to sudden heat change causes this detachment. By this detachment, the optical characteristics of the product are changed, or the reliability of the product can be declined, and thus, special cautions are required.

- 5630 PKG pad size is smaller than that of generalized PKG.
- Recommend to use solder ball of 25um below.
- Recommend to use stencil thickness of 80um more.
- Recommend to use more than 2-pads.
- 5630 PKG foot print is also smaller than generalized. That's why MCPCB selection is very important.
- Recommend to use MCPCB's Cu thick > 2oz. more.
- Recommend to use MCPCB's insulator thermal conductivity > 2W/mK more.(> 4W/mK is better)
- Do not impose a stress to the resin at high temperature.
- In mounting the product on board (substrate) or transporting the product, it must not be contacted with other components.
- In reflow soldering, it is required that reflow process should be taken within the scope of below "Suggested Reflow Temperature Profile."
- Flow soldering should be prohibited.

LUMENS

(2) Recommended Reflow Profile.

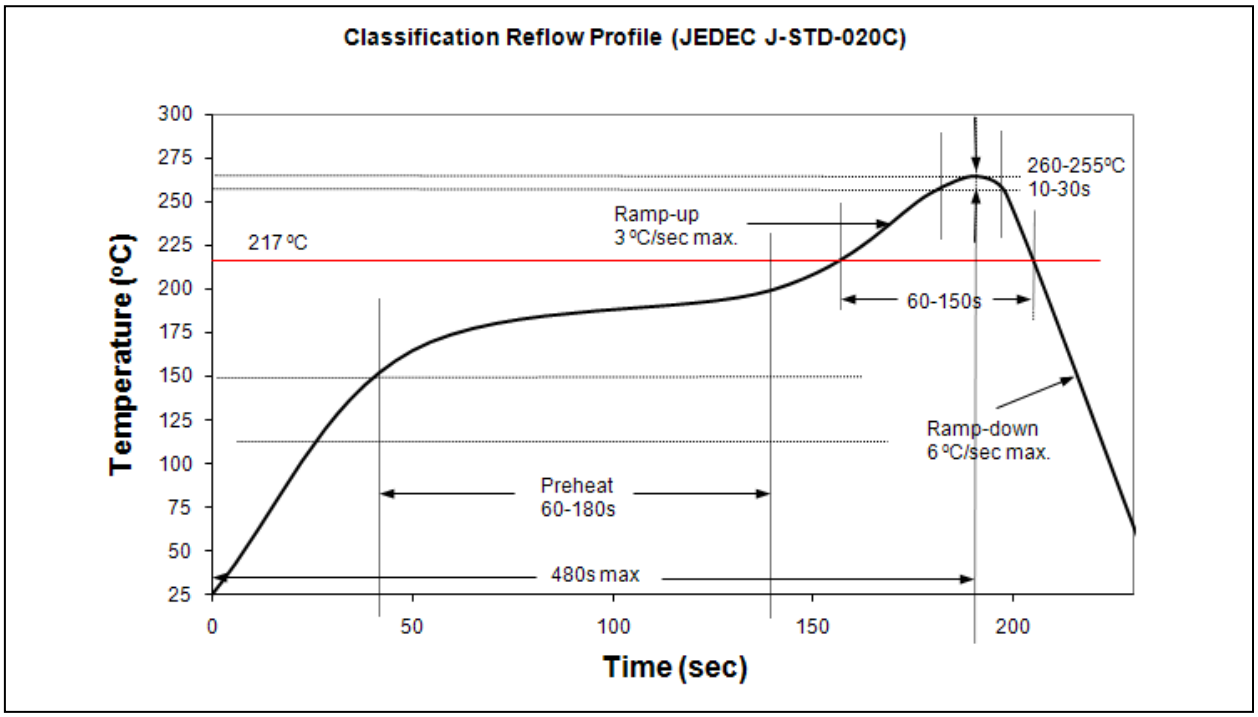

12. Cautions

(1) Moisture-Proof Package

1.1 When moisture is absorbed into the LED package it may vaporize and expand products during soldering. There is a possibility that this may cause exfoliation of the contacts and damage to the optical characteristics of the LEDs. For this reason, the moisture-proof package is used to keep moisture to a minimum in the package.

1.2 A package of a moisture-absorbent material (silica gel) is inserted into the shielding bag. The silica gel changes its color from blue to pink as it absorbs moisture.

(2) Current limiting

A resistor should be used to limit current spikes that can be caused by voltage fluctuations.
Otherwise damage could occur.

(3) Iron Soldering

3.1 Hand soldering is not recommended for regular production. These guidelines are for rework only.

3.2 Soldering iron tip should contact each terminal no more than 3 sec at 350℃, using soldering iron with nominal power less than 25W. Allow min. 2 sec. between soldering intervals.

(4) Storage Conditions

4.1 Before opening the package: The LEDs should be kept at 30℃ or less and 90%RH or less. The LEDs should be used within a year. When storing the LEDs, moisture-proof packaging with moisture-absorbent material (silica gel) is recommended.

4.2 After opening the package: The LEDs should be kept at 30℃ or less and 70%RH or less. The LEDs should be soldered within 168 hours (7 days) after opening the package. If unused LEDs remain, they should be stored in moisture-proof packages, such as sealed containers with packages of moisture-absorbent material (silica gel). It is also recommended to return the LEDs to the original moisture-proof bag and to reseal the moisture-proof bag again.

4.3 If the moisture-absorbent material (silica gel) has faded away or the LEDs have exceeded the recommended storage time, baking treatment should be performed using the following conditions.
Baking treatment: more than 24 hours at 65±5℃

4.4 Lumens LED electrode sections are comprised of a silver-plated copper alloy. The silver surface may be affected by environments which contain corrosive gases and so on. Please avoid condition which may cause difficulty environments during soldering operations. It is recommended that the user uses the LEDs as soon as possible.

4.5 Please avoid rapid transitions in ambient temperature, especially in high humidity environments where condensation can occur.

(5) Handling of Silicone LEDs

5.1 Avoid silicone resin parts especially with sharp tools such as tweezers.

5.2 Avoid leaving fingerprints on silicone lens part.

5.3 Do not apply the silicone lens part with pressure especially in SMT production. So use a proper nozzle not to press the lens part of the LED to pick and place.

(6) Usage

6.1 Do not exceed the values given in this specification.

LUMENS

NOTE :

All the information published is considered to be reliable. However, Lumens does not assume any liability arising out of the application or use of any product described herein.

Lumens reserves the right to make changes at any time without notice to any products in order to improve reliability, function or design.

Lumens products are not authorized for use as critical components in life support devices or systems without the express written approval from the managing director of Lumens.