CRYOGENIC GLOBE VALVES

BOLTED BONNET

GL CLASS 150

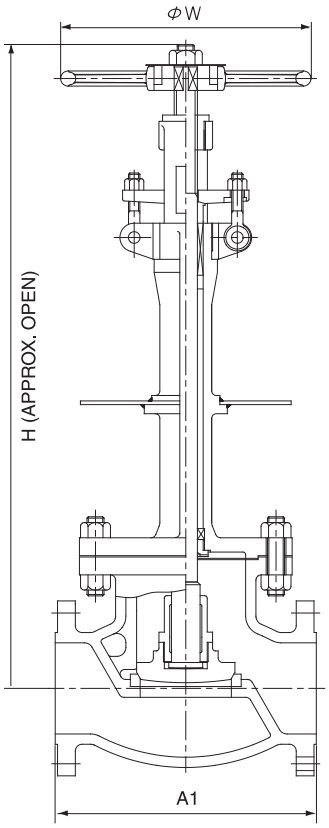

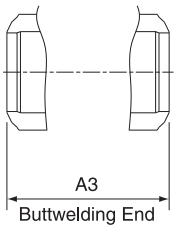

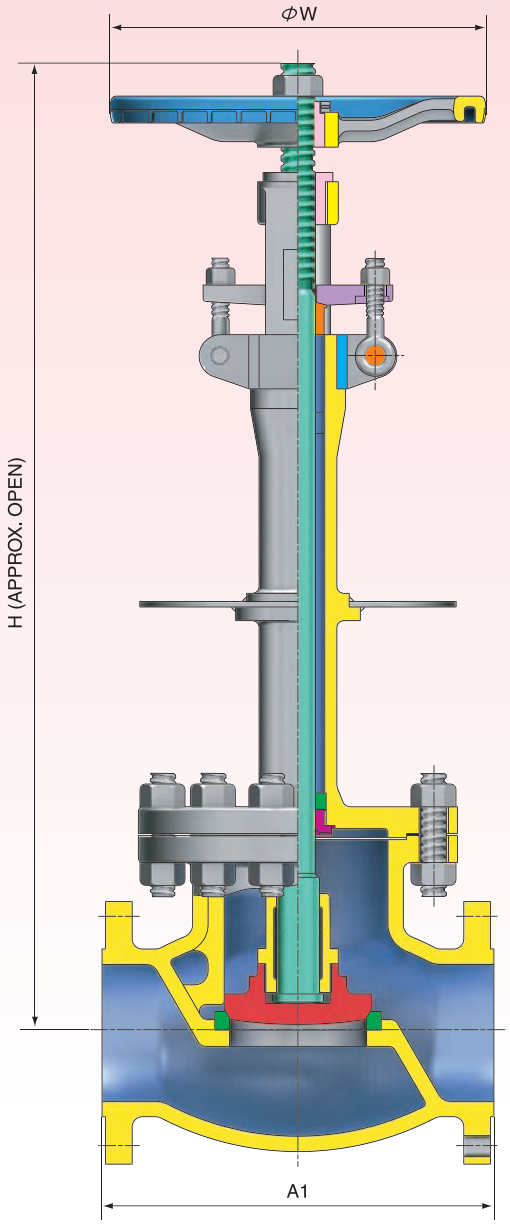

VALVE SIZE		in	2	2.5	3	4	6	8
		mm	50	65	80	100	150	200
A1 & A3		in	8.0	8.5	9.5	11.5	16.0	19.5
		mm	203	216	241	292	406	495
H		in	31.0	30.6	32.8	34.0	38.3	43.7
		mm	788	776	833	864.5	974	1110
W		in	8.8	9.8	14.0	15.7	17.7	22.0
		mm	224	250	355	400	450	560
WEIGHT	RF	lb	75.0	99.2	119.0	185.2	315.3	429.9
		kg	34	45	54	84	143	195
	BW	lb	63.9	83.8	99.2	158.7	288.8	385.8
		kg	29	38	45	72	131	175