Copyright 2021. HITROL CO., LTD all rights reserved.

FLOAT TYPE LEVEL SWITCH

HM-12(10) Series





2 YEARS WARRANTY

ISO 9001 ISO 14001 ASME

www.hitrol.com

Always The Best Solution

HITROL CO., LTD.

Overview

HM-12(10) Series is a Float Type Level Switch installing on the side of a tank and it is used for the process performing alarm function when filling and discharging of a tank with ON / OFF contact signal. It has an advantage of strong structure and long life cycle, and Weather Proof and Ex-Proof version are available.

Characteristics

- Widely used to detect various liquid levels
- Strong structure and long life cycle
- Applicable to high temperature
- Applicable to corrosive liquid
- Applicable to explosion area (Ex-Proof version)
- No leakage problem due to completely separated float and switch
- Strong durability of the float

Operation Principle

HM-12(10) is a level switch which uses a force of repulsion by magnetics each other. As the process level rises, the float rises and the float magnet pivots down then the switch magnet is repelled up and it activates the micro switch. It can be used for high or low alarm.

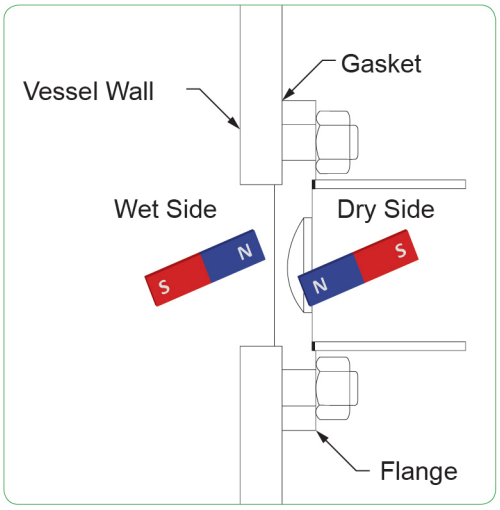

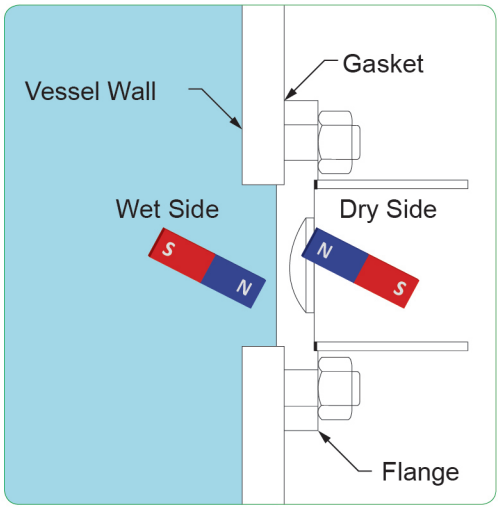

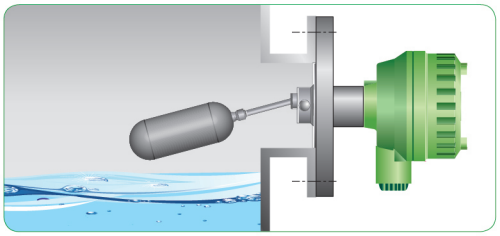

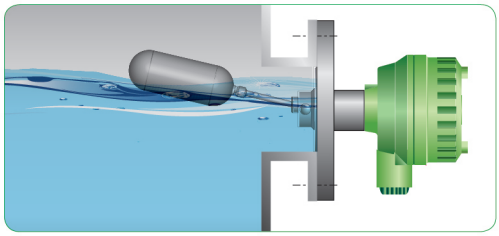

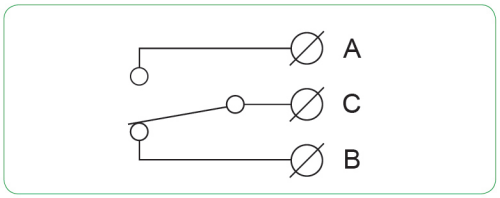

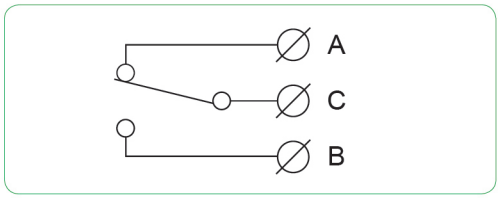

FLOAT TYPE LEVEL SWITCH
HM-12(10) series

Specification

Model	HM-10	HM-12S	HM-12H	HM-12H-Ex	HM-12D
Mounting	Flange				Square Flange
Ambient Temperature	-20°C ~ +60°C			-20°C ~ +80°C	-20°C ~ +60°C
Process Temperature	Max. 100°C	Max. 120°C			
Process Pressure	Up to 10kg/cm^2 (150#)		Up to 20kg/cm^2 (300#)		Up to 10kg/cm^2 (150#)
Output Signal	1-SPDT / DPDT	1-SPDT	1-SPDT / DPDT		1-SPDT
Contact Rating	AC250V,5A DC125V, 0.5A	AC250V,10A DC125V, 0.5A	AC250V,15A DC125V, 0.5A		AC250V,10A DC125V, 0.5A
Enclosure	Weather Proof (IP65)			Ex-Proof (Ex d IIC T4)	Weather Proof (IP65)
Wetted Part Material	SUS 316L				SUS 316L + B.S
Process Connection	50A JIS 10K RF (std.)	40A JIS 10K RF (std.)	65A JIS 10K RF (std.)		92 X 92 (mm)
Housing Material	Aluminum			Aluminum + SUS 304	B.S
Cable Entry	PF 1/2″(F)	PF 3/4″(F)	PF 1/2″(F)		

Model	HM-12H-SP	HM-12H-SP-Ex	HM-12H-L	HM-12H-L-Ex
Mounting	Flange			
Ambient Temperature	-20°C ~ +60°C	-20°C ~ +80°C	-20°C ~ +60°C	-20°C ~ +80°C
Process Temperature	Max. 250°C	Max. 200°C	Max. 120°C	
Process Pressure	Up to 20kg/cm^2 (300#)			
Output Signal	1-SPDT		1-SPDT / DPDT	
Contact Rating	AC250V,3A	AC125V,1A DC30V, 1A	AC250V,15A DC125V, 0.5A	AC250V,15A DC125V, 0.5A
Enclosure	Weather Proof (IP65)	Ex-Proof (Ex d IIC T4)	Weather Proof (IP65)	Ex-Proof (Ex d IIC T4)
Wetted Part Material	SUS 316L			
Process Connection	65A JIS 10K RF (std.)		80A JIS 10K RF (std.)	
Housing Material	Aluminum + SUS 304		Aluminum	Aluminum + SUS 304
Cable Entry	PF 1/2″(F)			

▶ **Order Code** can be printed at our website (www.hitrol.com)

Dimension

HM-12H

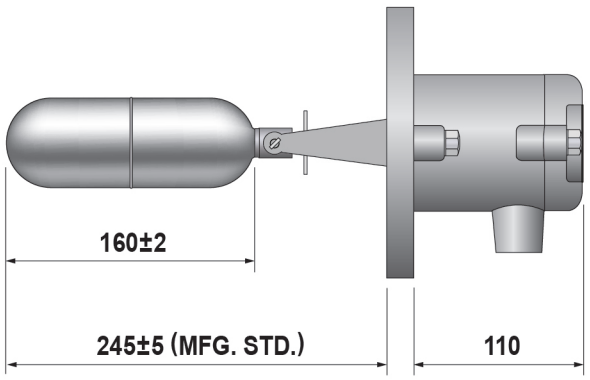

HM-12H-Ex

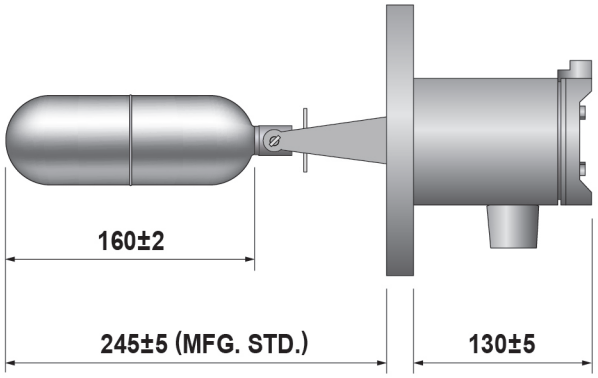

HM-12S

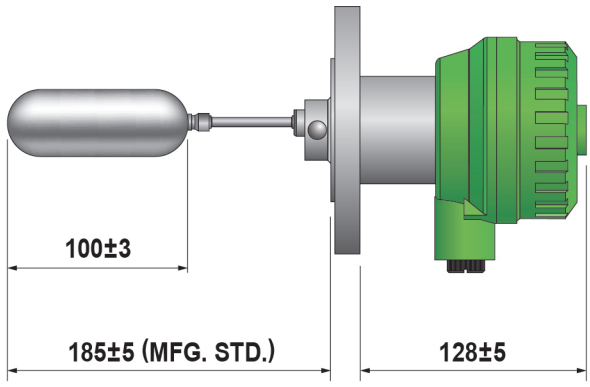

HM-12D

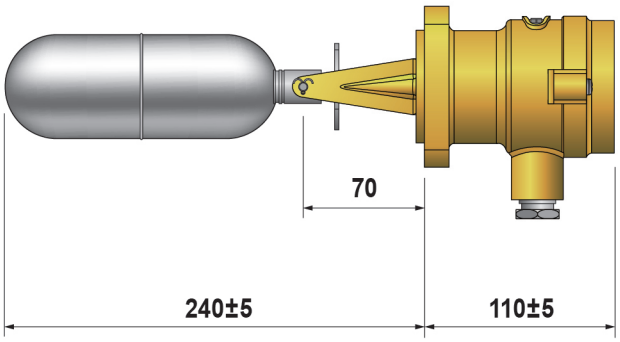

HM-10

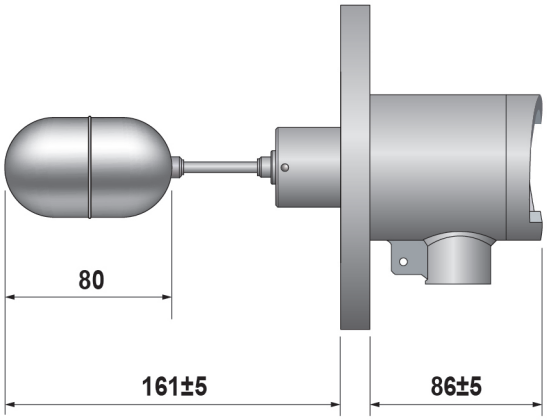

External Chamber

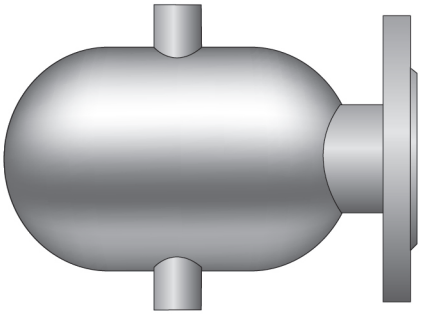

■ Actual product may have a tolerance slightly.

HM-12H-L

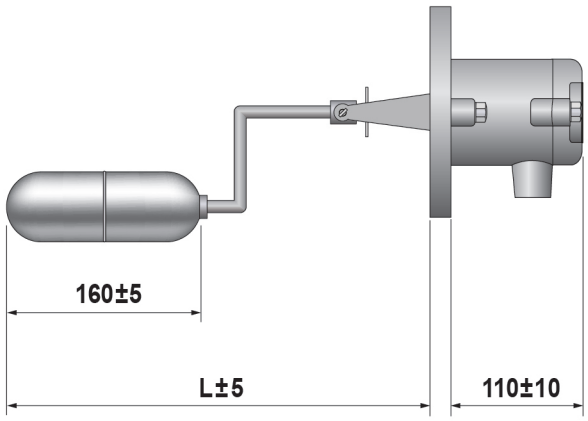

HM-12H-L-Ex

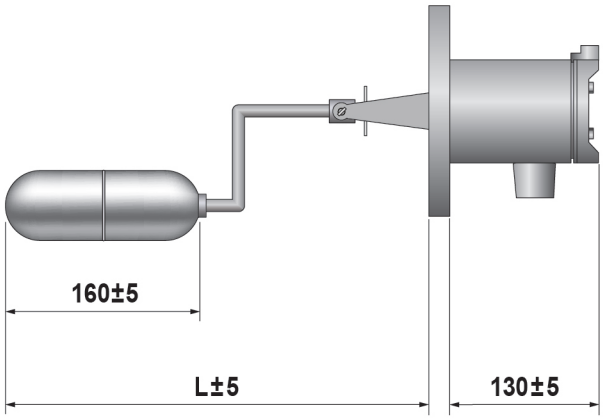

HM-12H-SP

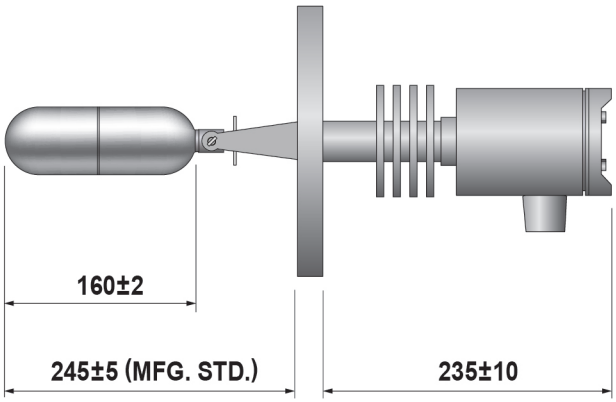

HM-12H-SP-Ex

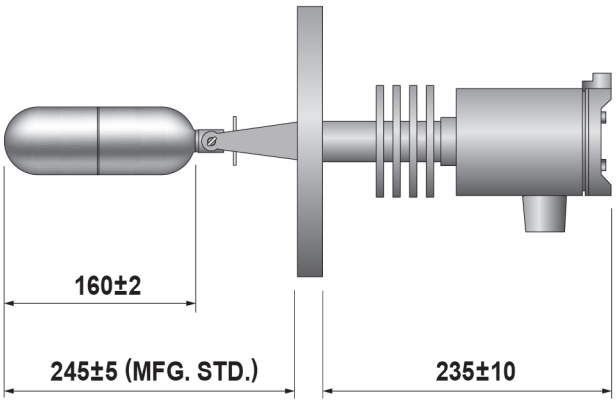

■ Actual product may have a tolerance slightly.

Application

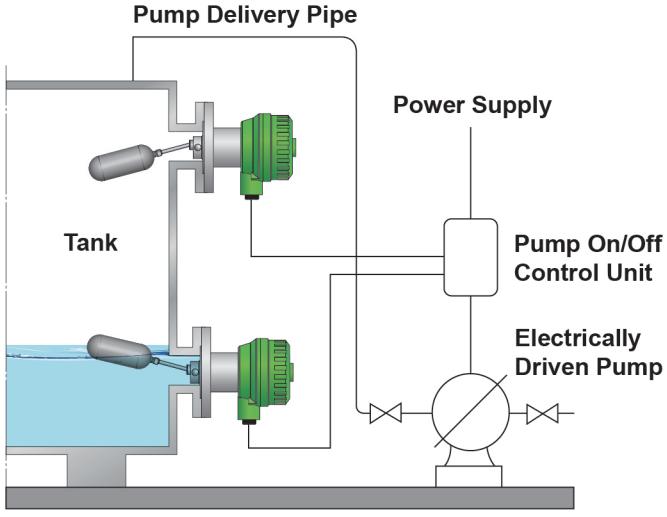

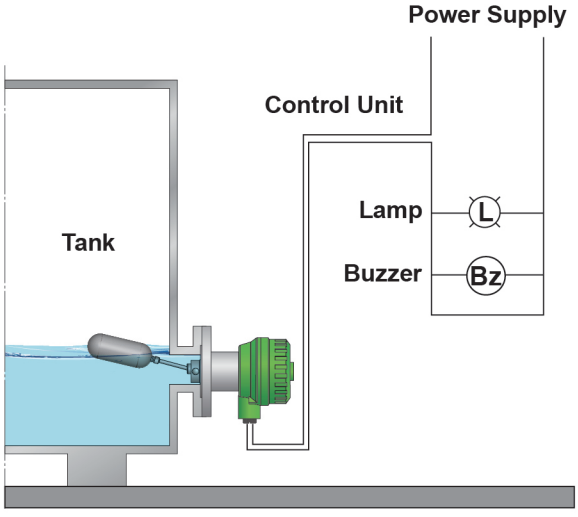

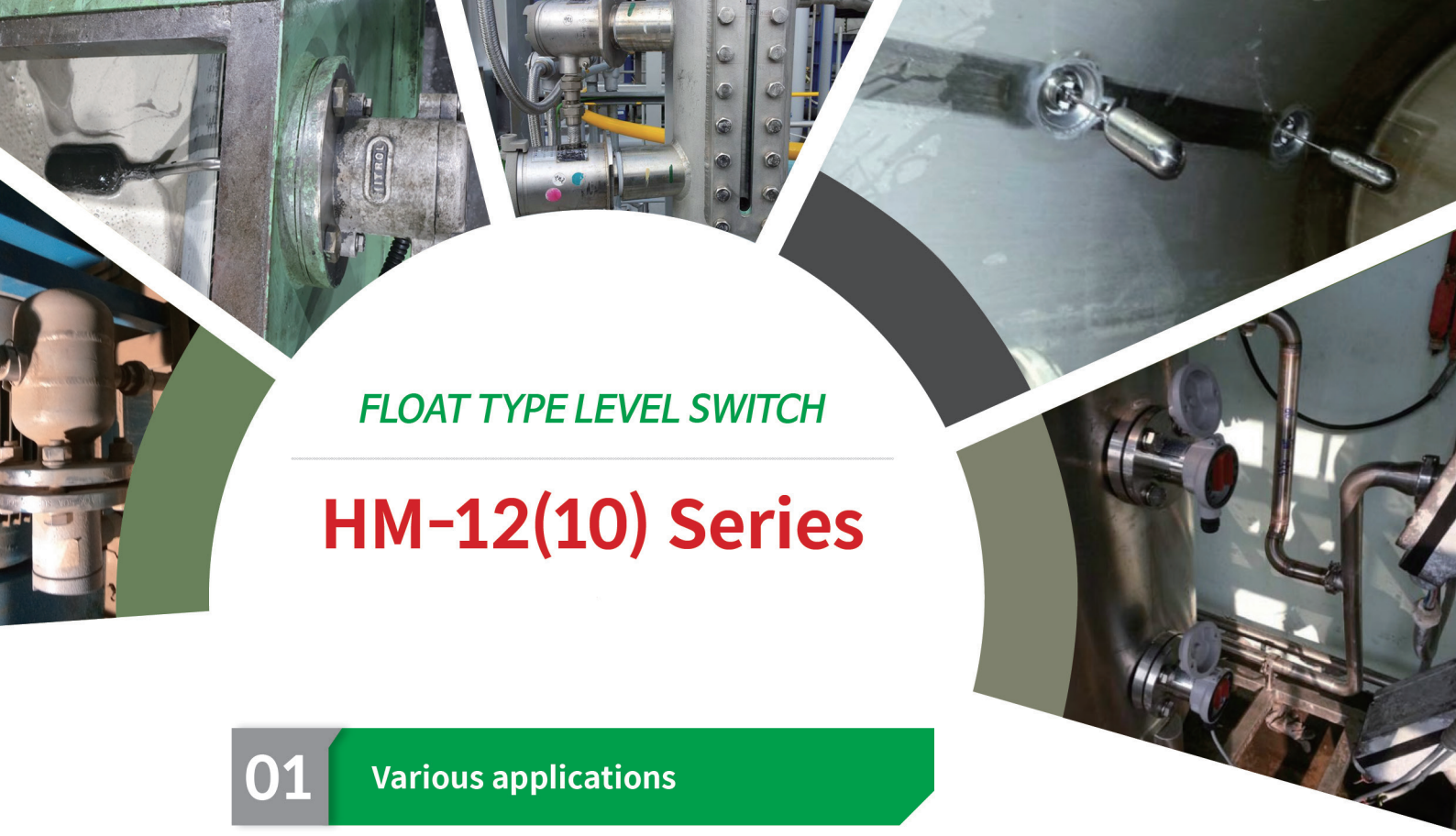

FLOAT TYPE LEVEL SWITCH

HM-12(10) Series

01 Various applications

02 Strong structure and high durability

03 Easy and convenient installation

hitrol@hitrol.com | www.hitrol.com

* Design of product can be changed for upgrade without notice.