SHINEUI
Shineui Entec co,. Ltd

ADD : 440-17 Cheong Cheon-Dong
Pu Pyung-Ku Inchon Korea
TEL : 82-32-503-3796 FAX : 82-32-504-0261

Water Pressure Sensor/Transmitter

(SWPSS 04)

PRODUCT SPECIFICATION SHEET



FEATURES

- Linearity out put(V)
- No-contact
- Excellent durability
- Reasonable price, etc..

CONTENTS

Features 1
Application 1
Specifications ..... 1~2
Dimensions 3

APPLICATION

This sensor is usually used in Home-Gas Boiler,piping devices and so on.

SPECIFICATION

Medium	air or water
Pressure range	0 ~ 4 bar(This can be changed by an orderer)
Rupture pressure	10 bar
Materials in contact with medium	- Cover : PA66(GF 30%) - Sensor : Hall
Rubber	- EPDM : Air, Water
Temperature	- Medium and ambient : 0 ℃ ~ 85 ℃(It shall not be frozen) - Storage : -30 ℃ ~ 80 ℃ -Rupture : 95 ℃
Power supply/Output	- Power supply : DC 5V - Output : 0.5V ~ 4.5V
Current consumption	less than 15mA

www.shineui.co.kr shineui@shineui.co.kr

Pressure connection	Plug connector (Refer to Dimension)
Electrical connection	YEONHO, SMH250-03
Weight	51g
Installation Direction	Free
Protection standard	IP 00
Accuracy	±3.0(% F.S) (Included hysteresis value)
Life Cycle	On / Off : 5 Sec – 100,000 Cycle

OUTPUT

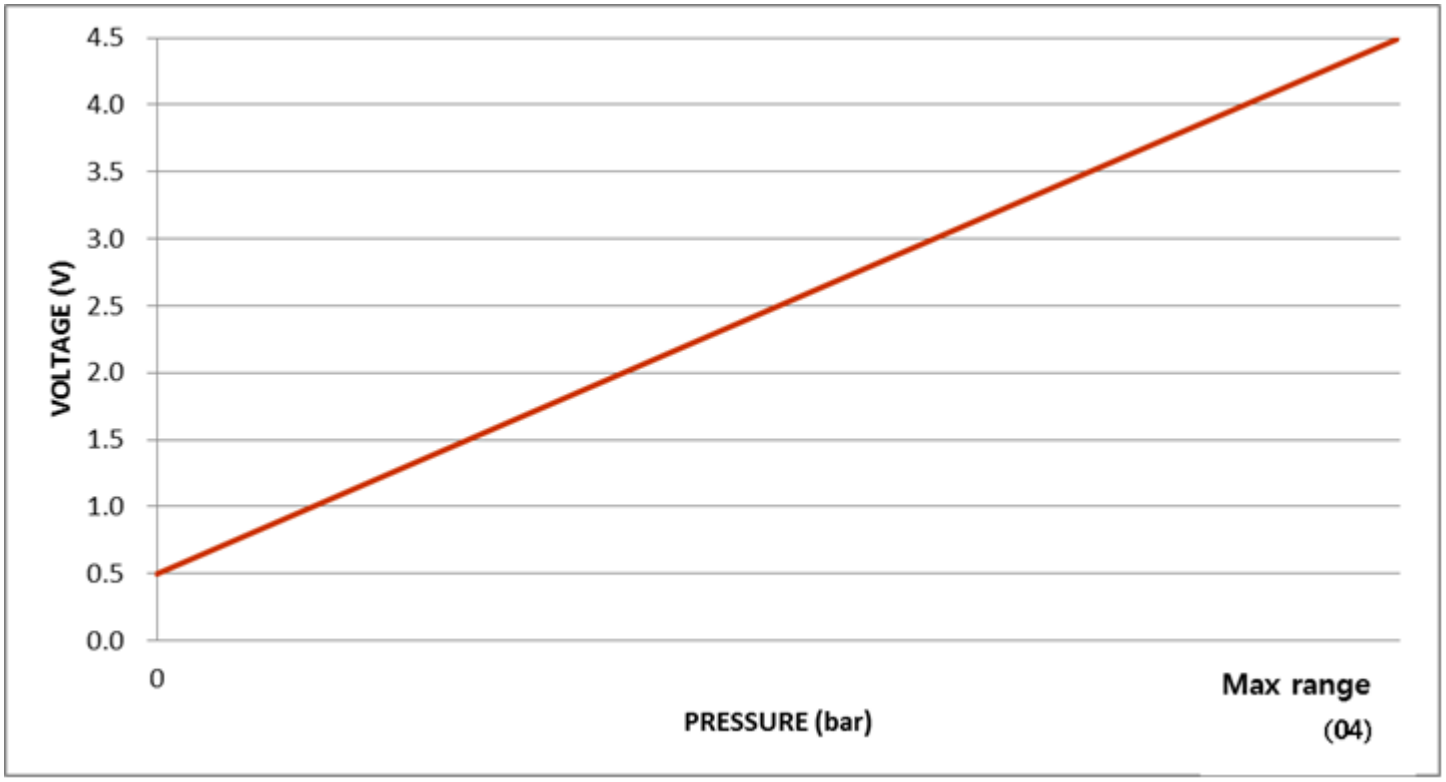

DIMENSION

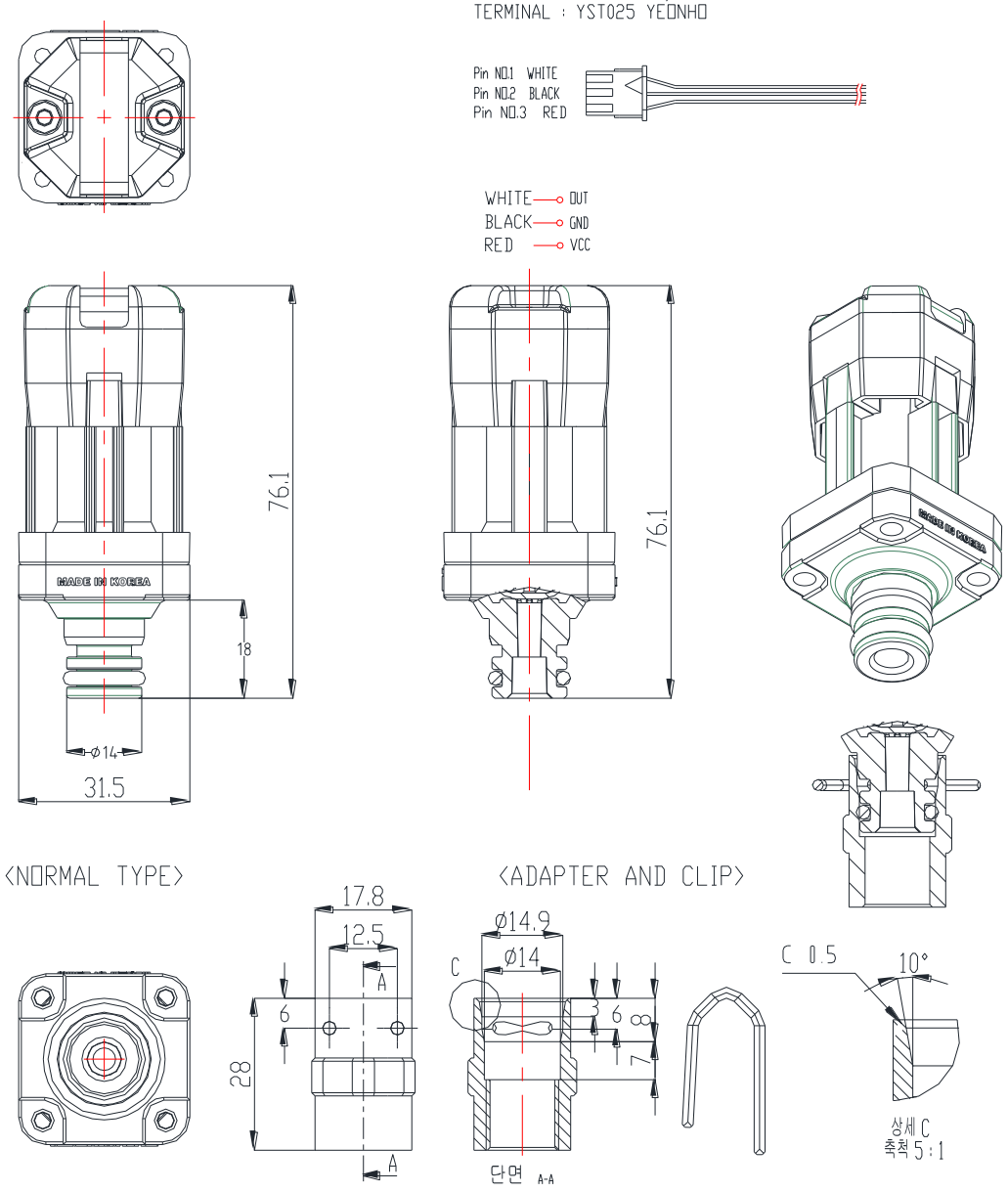

The specifications and dimensions can be changed without warning.

www.shineui.co.kr shineui@shineui.co.kr