SD Torque-Angle control Digital Screwdriver

Optimized for micro torque, angle control & data monitoring



SEHAN
ELECTOOLS

SEHAN
ELECTOOLS

Smart Screwdriver System



Replace over 3 Screwdrivers
with easy Torque, Speed Shifting
Best choice for Cell line Manufacturing





PC Communication by
USB or RS232



32Bit Microprossor





Built in Screw counter

Patent

Worldwide Patent



25P I/O Remote control &
Preset no seleting by sensor



Best Quality Brushless motor used



Data monitoring &
Quality control

Example of Shifting various Torque by sensor

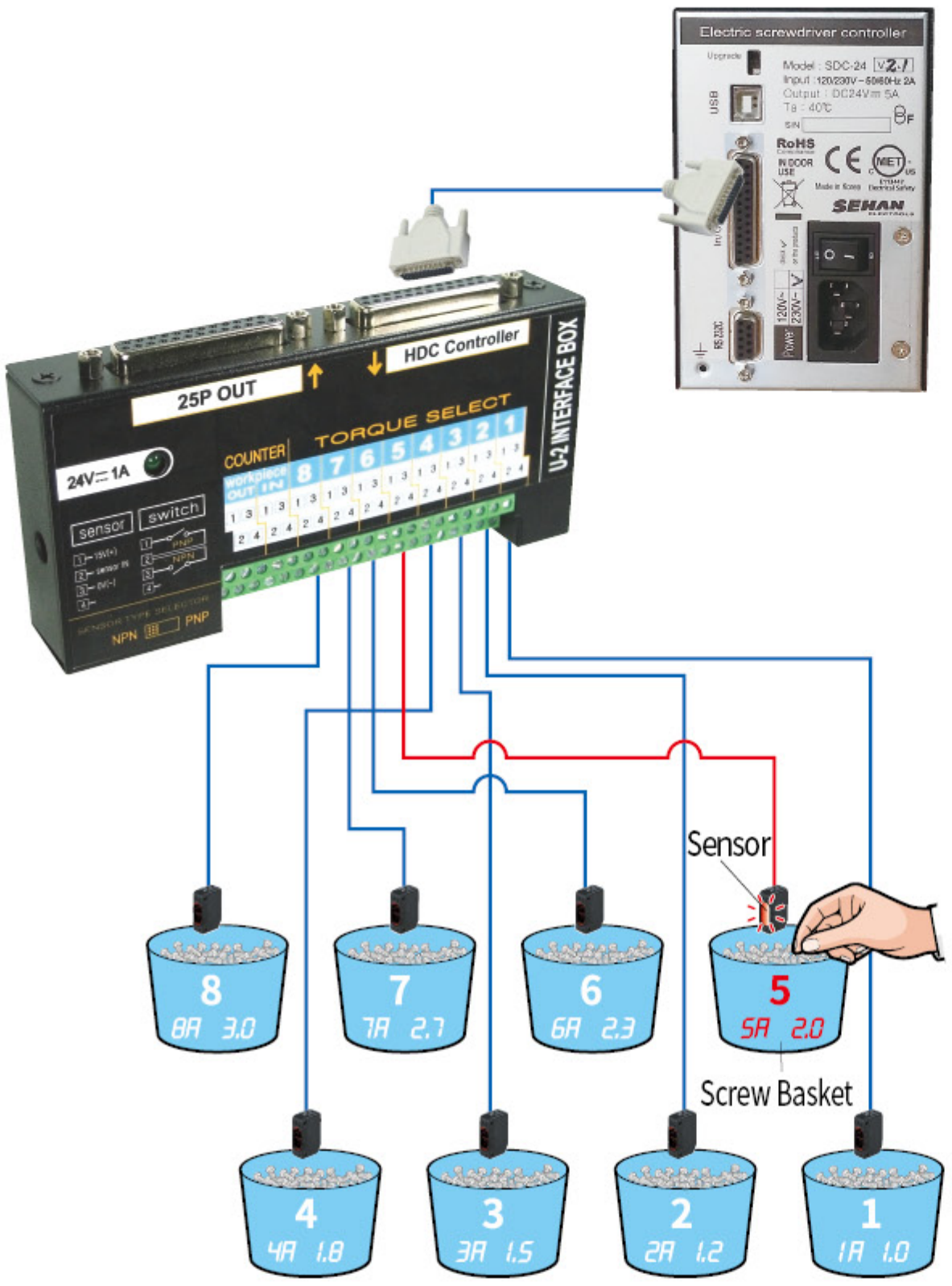



• FND Description

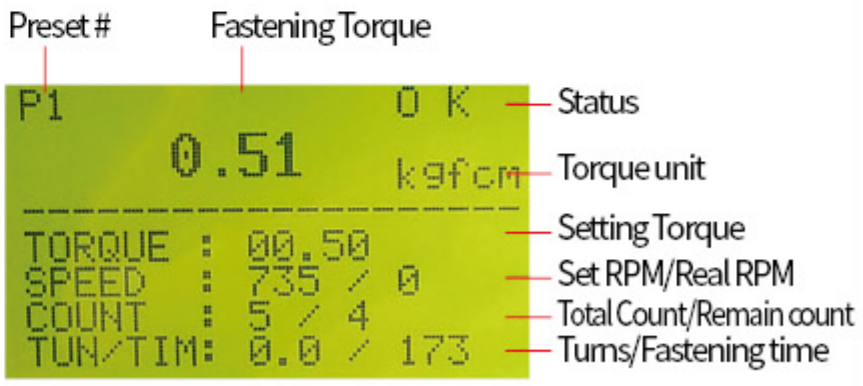

- Preset no 1 8 has each torque, speed, angle(min/max) setting.
- Each preset no. is simply selected by sensor when operator pick up screw.



• Desktop robot fastening - AFS

SEHAN HYBRID DIGITAL SCREWDRIVERS
Best combination of ergonomic design and precision power mechanism

SEHAN ELECTOOLS

SD070, SD120, 200, 300

SD1000

SD18N
SD28N



- Swiss made motor used
- ESD free by body grounding
- Torque repeatability ±3%
- Long life time over 5 million cycle
- Inside memory chip for tool data



Controller :
SDC-24, SDC-40

Model : **SD18N-A**

Base model

1/4" Hex bit socket

Straight	Toque(Kgf.cm)	Speed(RPM)-Auto	Speed(RPM)-manual	BIT SOCKET	Weight	Controller
SD070	0.1~0.7	340-930	100-1000	E	0.26	
SD120	0.3~1.5	240-1000	150-1000	E	0.26	
SD200	0.5~2.0	420-1000	300-1000	A.E	0.29	
SD300	1.0~3.0	360-890	200-1000	A.E	0.29	SDC-24
SD600	1.5~6.0	190-710	150-1000	A.E	0.33	
SD1000	2.0~10.0	130-430	100-750	A.E	0.38	
SD1500	3~15	120-400		A	0.38	
SD05N	1.00~5.00	400-1000	100-1000	A.E	0.64	
SD09N	1.50~9.00	300-1000	100-1000	A.E	0.65	SDC-40
SD18N	4.0~18.0	300-900	100-1000	A	0.75	
SD28N	5.0~28.0	190-780	100-1000	A	0.75	

Accessary

- **Data manager**
  7" Touch Screen



U-2 Interface Box

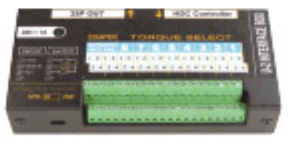

- **Standard**
  Driver Cable 10p 3m



- **Option**
  Chromium plating for Clean room



Cable for PC communication
RS232 Com Cable



Bracket for stand
(SD070, 120, 200, 300, 600, 1000)



BIT SOCKET

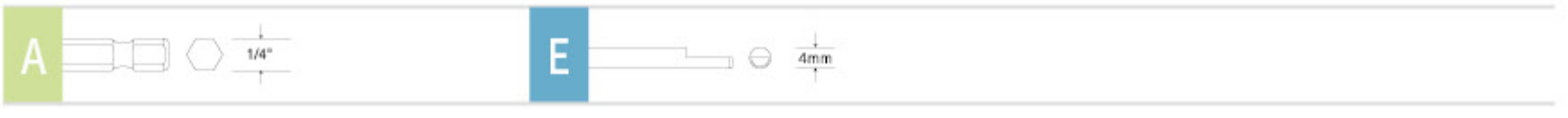

SEHAN ELECTOOLS

SDA120-FV
SDA200-FV
SDA300-FV

SDA600-FVC
SDA600-FVC

SDA05N
SDA09N
SDA18N
SDA28N

SDA05N-V
SDA09N-V
SDA18N-V
SDA28N-V

SD120Z
SD200Z
SD300Z





- Swiss made motor used
- ESD free by body grounding
- Torque repeatability ±3%
- Long life time over 5 million cycle
- Inside memory chip for tool data
- Automation system applicable



Controller :
SDC-24, SDC-40

Offset	Straight	Toque(Kgf.cm)	Speed(RPM)-Auto	Speed(RPM)-manual	BIT SOCKET	Weight	Controller
SD120Z	SDA120	0.3~1.5	400-1000	150-100	E	0.46	SDC-24
SD200Z	SDA200	0.5~2.0	420-1000	300-1000	E		
SD300Z	SDA300	1.0~3.0	360-890	200-1000	E		
	SDA600	1.5~6.0	190-710	150-1000	A		
	SDA1000	2.0~10.0	130-430	100-750	A	0.67	
	SDA05N	1.0~5.0	400-1000	100-1000	A.E	0.68	SDC-40
	SDA09N	1.5~9.0	300-1000	100-1000	A.E	0.69	
	SDA18N	4.0~18.0	300-900	100-1000	A	0.75	
	SDA28N	5.0~28.0	190-780	100-1000	A	0.75	

Accessary

- **Data manager**
  7" Touch Screen



U-2 Interface Box



- **Standard**
  Driver Cable 10p 3m



- **Option**
  Cable for PC communication
  RS232 Com Cable



Customized solution



BIT SOCKET



SEHAN ELECTOOLS

LAYOUT FOR SMART Digital Screwdriver

HAND HELD SCREWDRIVERS Layout

SD070-E, SD120-E, SD200-E, SD300-E

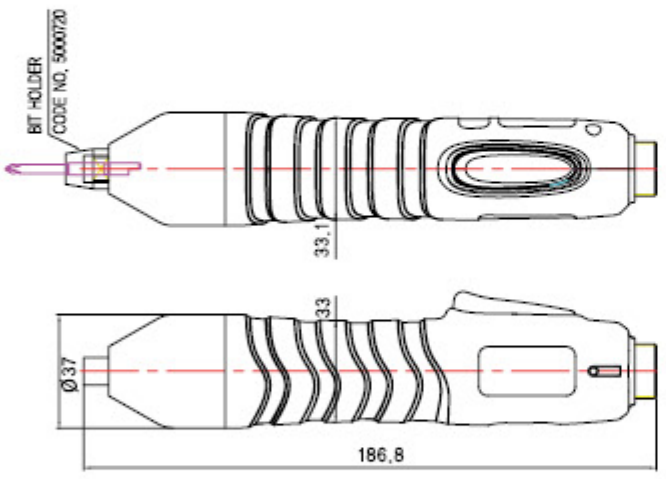

SD600-E

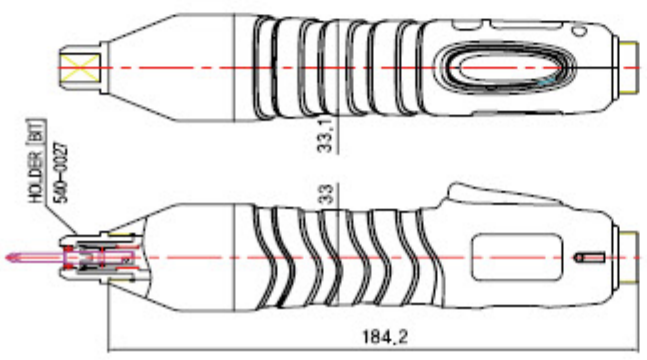

SD1000-A

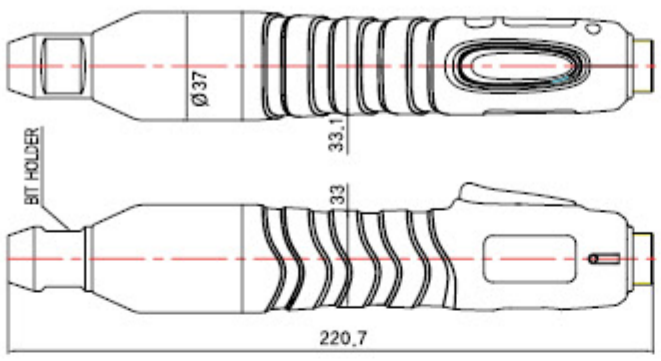

SD05N-A, SD09N-A, SD18N-A, SD28N-A

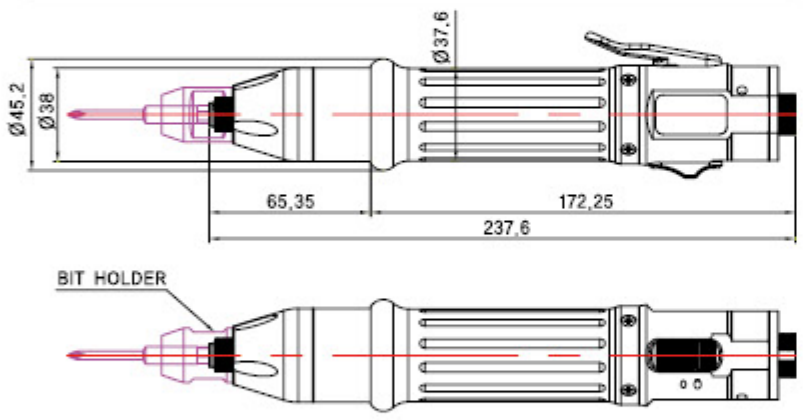

AUTOMATION SCREWDRIVERS Layout

SDA120-E/FV, SDA200-E/FV, SDA300-E/FV

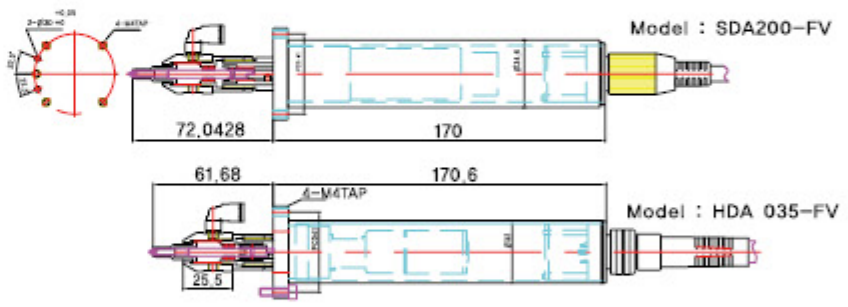

SDA600-A/FVC, SDA1000-A/FVC

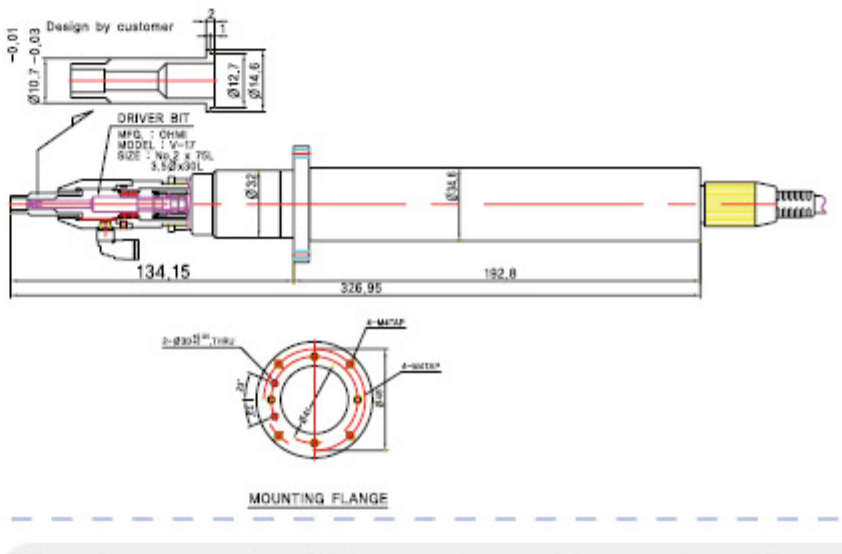

SDA05N-A, SDA09N-A, SDA18N-A, SDA28N-A

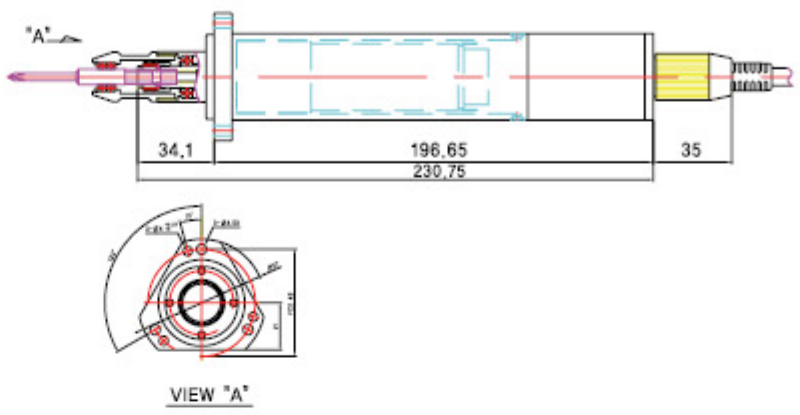

SDA05N-A/V, SDA09N-A/V, SDA18N-A/V, SDA28N-A/V (with Screw vacuum pick-up assy)

MODEL SD A 600 - A / F V C

- SD — Series
- A — Automation
- 600 — Maximum torque
- A — Bit socket type
- F — Flange for mounting
- V — Screw vacuum pick-up assy
- C — With Bit cushion

SEHAN ELECTOOLS

■ CONTROLLERS



■ POWER CODE



KS UL CE

SDC-24

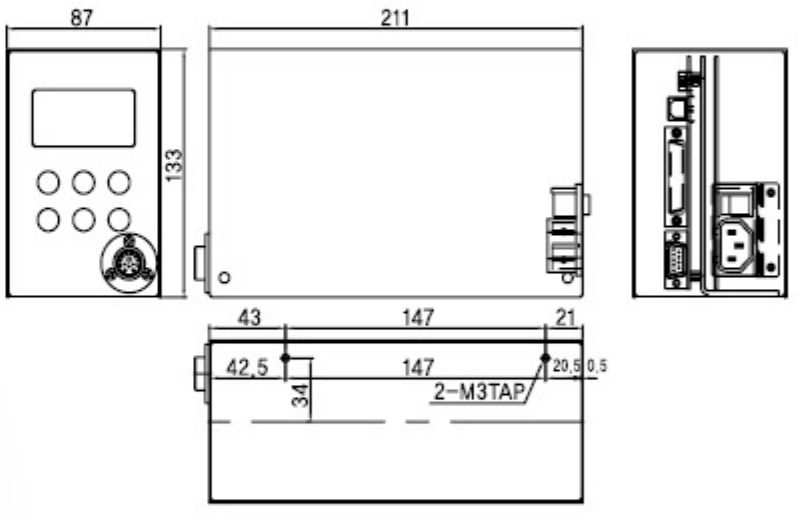

SDC-40

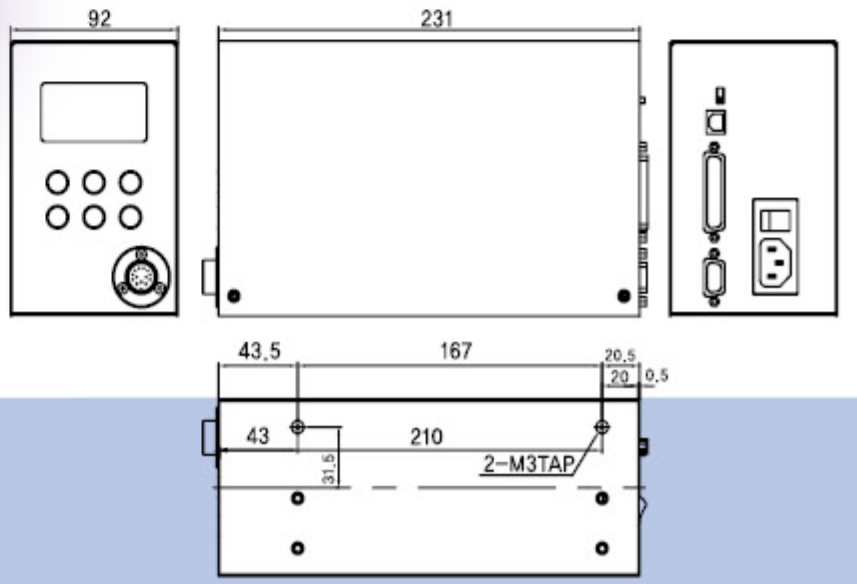

SDC-24 | SDC-40

No	ITEM	SPECIFICATION	
1	Model	**SDC-24**	**SDC-40**
2	Input	AC120VC or AC230VC, 50/60Hz, 2.0A	AC120VC or AC230VC, 50/60Hz, 3.0A
3	Output	DC24V, max5.0A	DC40V, max5.0A
4	Fuse	AC250V, 6.3A	AC250V, 10A
5	Dimension / Weight	refer to the drawing	
6	Preset Parameters	Torque, Speed & Angle in 8 preset numbers	
7	Select the preset no.	1) Front panel button 2) 25P I/O interface 3) 8 direct sensor connect port	
8	Torque Calibration	From -10% to +10%	
9	Auto detection of the connect driver	Auto detection of the offset value from the EEP-rom on the driver	
10	Error Display	Error display by code no. in system, communication & pattern error group	
11	Fastening quality control	OK/NG monitoring of screw fastening by preset pattern of angles, times	
12	Screw Counter	Saving the total screw number, and monitoring the number of OK fastening screws.	
13	Monitoring and parameter	Monitoring and parameter setting on the PC program (MS windows base) Smart-manager or front panel	
14	Communication port	USB or RS232C	

SEHAN
ELECTOOLS

Set and monitor your tool, your tightening environment on free PC Software, Smart manager



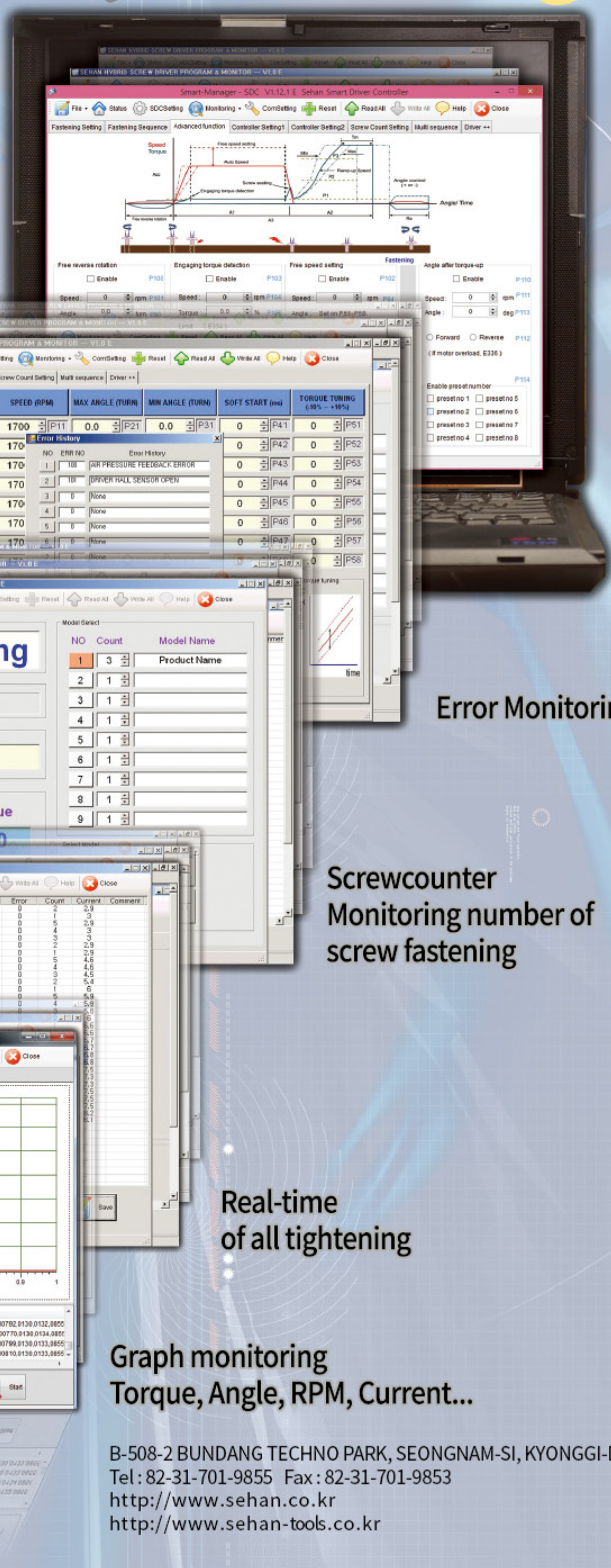

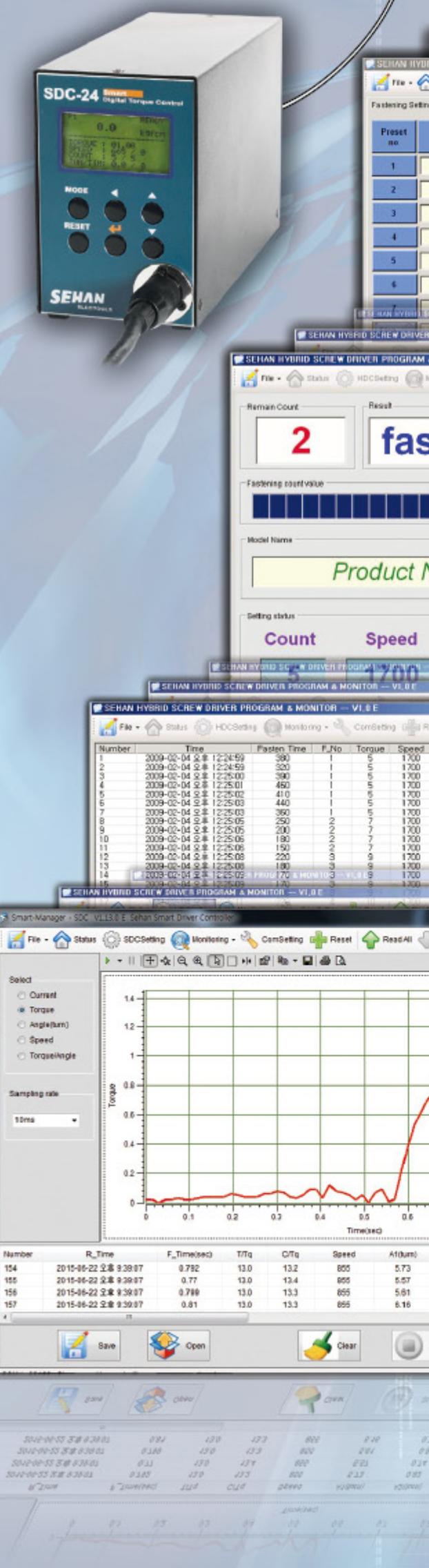

Advanced fastening function

Error Monitoring

Screwcounter
Monitoring number of screw fastening

Real-time
of all tightening

Graph monitoring
Torque, Angle, RPM, Current...

B-508-2 BUNDANG TECHNO PARK, SEONGNAM-SI, KYONGGI-DO, KOREA (463-760)
Tel : 82-31-701-9855 Fax : 82-31-701-9853
http://www.sehan.co.kr
http://www.sehan-tools.co.kr