

Park XE15

Power and versatility, brilliantly combined.

www.parkAFM.com

Park SYSTEMS



Park XE15

Increase your productivity with our powerfully versatile atomic force microscope

The Park XE15 includes many unique capabilities that make it ideal for shared labs that handle a diverse range of samples, researchers doing multi variant experiments, and failure analysis engineers working on wafers. Its reasonable price and robust feature set also make it one of the best value large-sample AFMs in the industry.

Unique MultiSample™ scan boosts research productivity

Maximize your efficiency with the only AFM that offers the ability to image and measure multiple samples in one pass. Simply load the stage with your samples and initiate the scan process. This feature also allows you to scan the samples under identical environmental conditions, improving the accuracy and reliability of your data.

Large sample size increases possibilities

Unlike most AFMs, the Park XE15 can scan a sample of up to 150 mm x 150 mm. This makes it ideal for researchers wanting to scan larger samples or failure analysis engineers who need to place silicon wafers on the stage.

Features adaptable to any need

The Park XE15 features our most inclusive set of scan modes and can process a range of sample sizes. This makes it uniquely suited to shared labs with a wide range of individual requirements.

Park XE15

All the features that make Park AFMs the world's most accurate and powerful

The most convenient sample measurements with MultiSample™ scan

- Automated imaging of multiple samples in one pass
- Specially designed multi-sample chuck for the loading of up to 16 individual samples
- Fully motorized XY sample stage travels up to 150 mm x 150 mm.

More accurate scans with Crosstalk Elimination

- Dual independent, closed-loop XY and Z flexure scanners for sample probe and tip
- Flat and linear XY scan of up to 100 µm x 100 µm with low residual bow
- Out of plane motion of less than 2 nm over entire scan range
- Up to 25 µm Z-scan by high force scanner
- More accurate height measurements

Better tip life, sample preservation, and accuracy with True Non-Contact™ Mode

- 10 times larger Z-scan bandwidth than a piezotube based system
- Non contact means less tip wear and longer tip life
- Higher resolution imaging than competing AFMs
- Decreased sample interference for more accurate scans

The most user friendly AFM available

- Open side access for faster sample and tip exchange
- Intuitive laser alignment with pre-aligned tip mount and unique on-axis, top down view
- Faster head removal with dovetail lock mount
- Easy to use interface with automatic settings

Versatile range of modes and options

- Comprehensive set of measurement modes and characterizations make this one of our most versatile AFMs
- Expanded capabilities with optional accessories and upgrades
- Advanced electrical measurements for failure analysis (FA)

Park XE15
AFM Technology

Flat Orthogonal XY Scanning Without Scanner Bow

Park's Crosstalk Elimination removes scanner bow, allowing flat orthogonal XY scanning regardless of scan location, scan rate, and scan size. It shows no background curvature even on flattest samples, such as an optical flat, and with various scan offsets. This provides you with a very accurate height measurement and precision nanometrology for the most challenging problems in research and engineering.

Decoupled XY and Z Scanners

The fundamental difference between Park and its closest competitor is in the scanner architecture. Park's unique flexure based independent XY scanner and Z scanner design allows unmatched data accuracy in nano resolution in the industry.



Accurate Surface Measurement

"Flat" sample surface as it is!

- Low residual bow
- No need for software processing (raw data)
- Accurate results independent of scan location

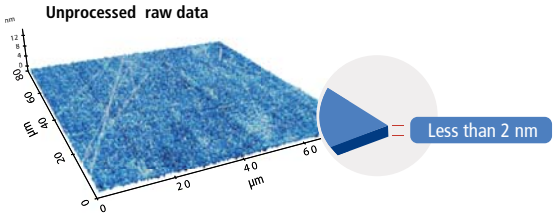

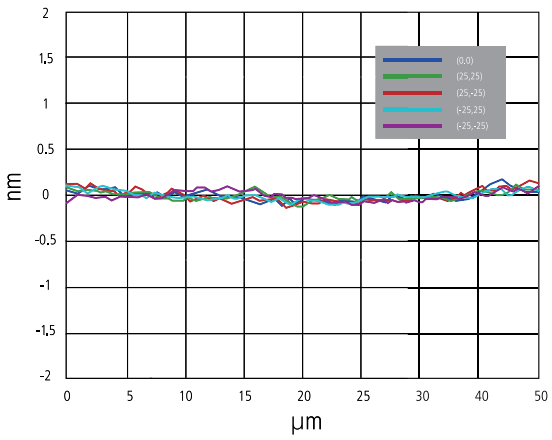

True Non-Contact™ Mode Preserves Tip Sharpness

AFM tips are so brittle that touching a sample will instantly reduce the resolution and quality of the image they produce. For soft and delicate samples, the tip will also damage the sample and result in inaccurate sample height measurements, something that can cost you valuable time and money.

True Non-Contact™ mode, a scan mode unique to Park AFMs, consistently produces high resolution and accurate data while maintaining the integrity of the sample.

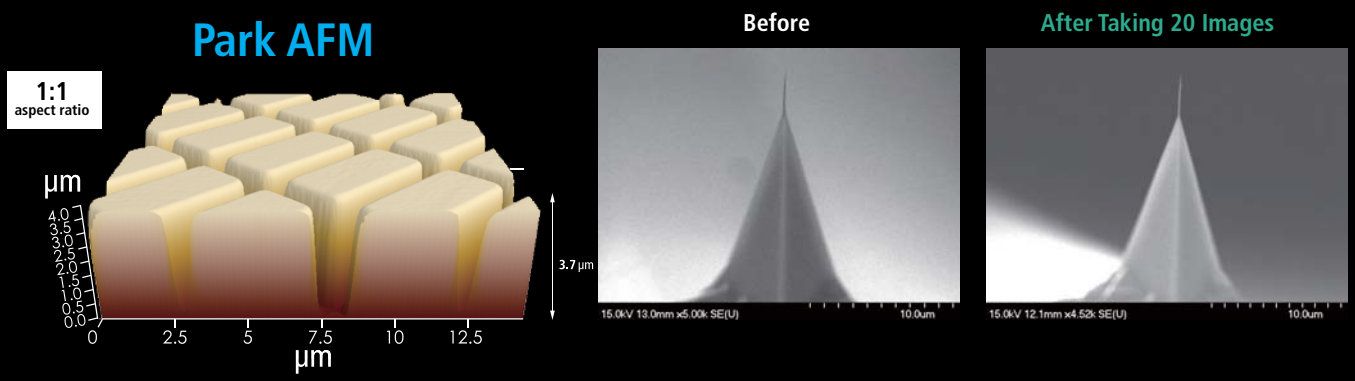

Accurate Feedback by Faster Z-servo enables True Non-Contact AFM

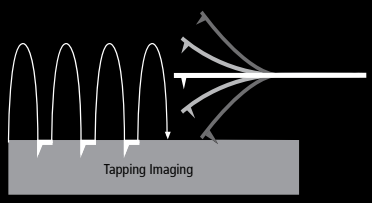

Tapping Imaging

- Quick tip wear = Blurred low-resolution scan
- Destructive tip-sample interaction = Sample damage and modification
- Highly parameter-dependent



True Non-Contact™ Mode

- Less tip wear = Prolonged high-resolution scan
- Non-destructive tip-sample interaction = Minimized sample modification
- Immunity from parameter dependent results

Park XE15

Equipped with the most innovative AFM technology

❶ Flexure-Guided Scanner with 100 µm x 100 µm Scan Range

The XY scanner consists of symmetrical 2-dimensional flexure and high-force piezoelectric stacks provides high orthogonal movement with minimal out-of-plane motion as well as high responsiveness essential for precise sample scanning in the nanometer scale.

❷ Flexure-Guided High Force Z Scanner

Driven by a high-force piezoelectric stack and guided by a flexure structure, its rigidity allows it to move at higher speeds in the vertical direction than the scanners used in conventional AFMs. The maximum Z scan range can be extended from 12 µm to 25µm with the optional long range Z scanner (optional).

❸ Slide-to-Connect SLD Head

The AFM head is easily inserted or removed by sliding it along a dovetail rail. The low coherency of the Super Luminescence Diode (SLD) enables accurate imaging of highly reflective surfaces and precise measurements for pico-Newton Force-distance spectroscopy. The SLD wavelength eliminates interference issues for users interested in combining the AFM with experiments in the visible spectrum.

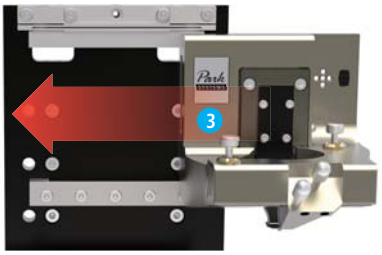

❹ Multi-sample Chuck

The specially designed multi-sample chuck can load up to 16 individual samples, which can be scanned sequentially by MultiSample Scan Automation. The unique head design allows for easy side access to the sample tip.

❺ Motorized XY Sample Stage with Optional Encoders

The measurement location of the sample is easily and precisely controlled by the integrated motorized XY stage. The travel range of the XY sample stage can be configured for 150 mm x 150 mm. The encoders, if used with the motorized stages, enable higher positioning repeatability for accurate sample positioning. The encoded XY stage travels in 1 µm resolution with 2 µm repeatability, and the encoded Z stage, in 0.1 µm resolution with 1 µm repeatability.

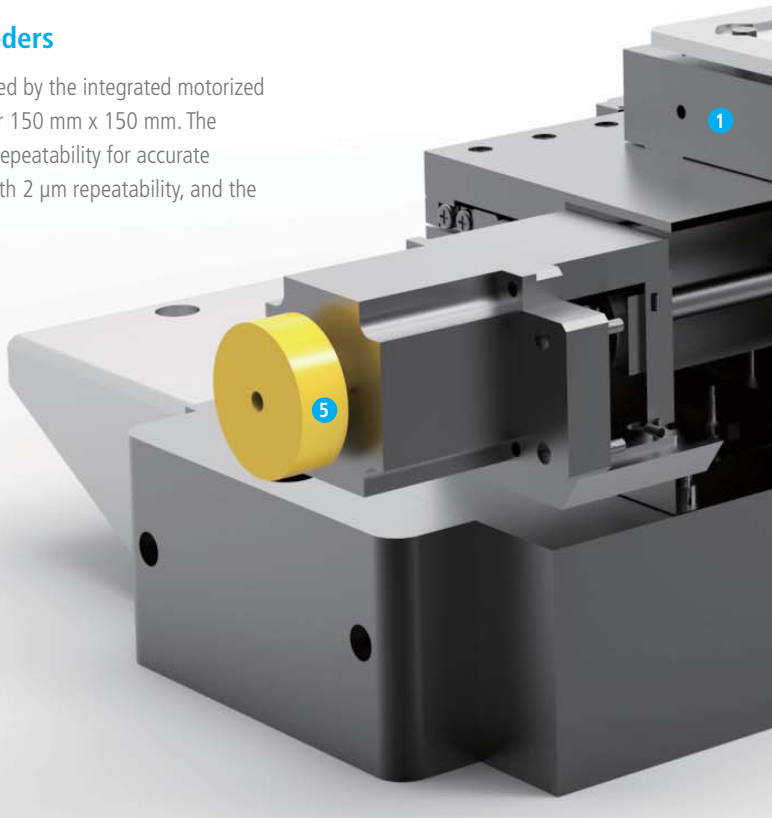



6 High Resolution Digital CCD Camera with Digital Zoom

Direct on-axis high resolution digital CCD camera with digital zoom capability allows high clarity and high resolution image quality regardless of panning.

7 Vertically Aligned Motorized Z Stage and Focus Stage

The Z stage and focus stage engage the cantilever with the sample surface while constantly maintaining a clear field of vision for the user. And because the focus stage is motorized and software controlled, it has the precision necessary for transparent samples and liquid cell applications.

Park XE Control Electronics with DSP Board in Controller

The nanoscale signals from the AFM are controlled and processed by the high performance Park XE electronics. With its low noise design and high speed processing unit, Park XE electronics successfully realize True Non-Contact™ mode ideal for nanoscale imaging as well as precise voltage and current measurement.

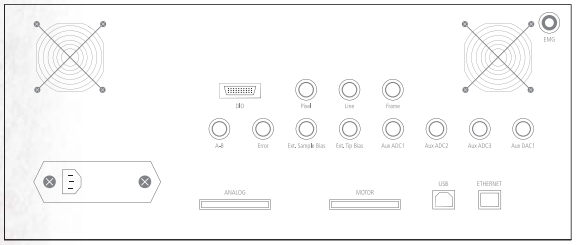

- High performance processing unit of 600 MHz and 4800 MIPS speed
- Low noise design for precise voltage and current measurement
- Versatile system to utilize various SPM techniques
- External Signal Access Module to access AFM input/output signals
- Maximum 16 data images
- Maximum data size: 4096 × 4096 pixels
- ADC/DAC in 16 bit, 500 kHz speed
- Electric noise isolation from PC by TCP/IP connection

Park XE15

Why the most affordable AFM is also accurate and easy to use

MultiSample™ Scan

Using the motorized sample stage, MultiSample ScanTM enables programmable multiple region imaging in step-and-scan automation. Here's how it works:

1. Register multiple scan positions defined by a user
2. Image from the first scan position
3. Lift a cantilever
4. Move the motorized stage to the next user defined coordinate
5. Approach
6. Repeat scan



The registration of multiple scan positions are easily carried out by either entering sample-stage coordinates or sample de-skewing by two reference points. This automated feature greatly increases productivity by reducing the need for your interaction during the scan process.

Direct On-Axis Optics

The intuitive direct on-axis sample view from the top allows you to navigate the sample surface easily to find the target area. A high-resolution digital camera with zoom capability allows clarity and great image quality regardless of panning motion.



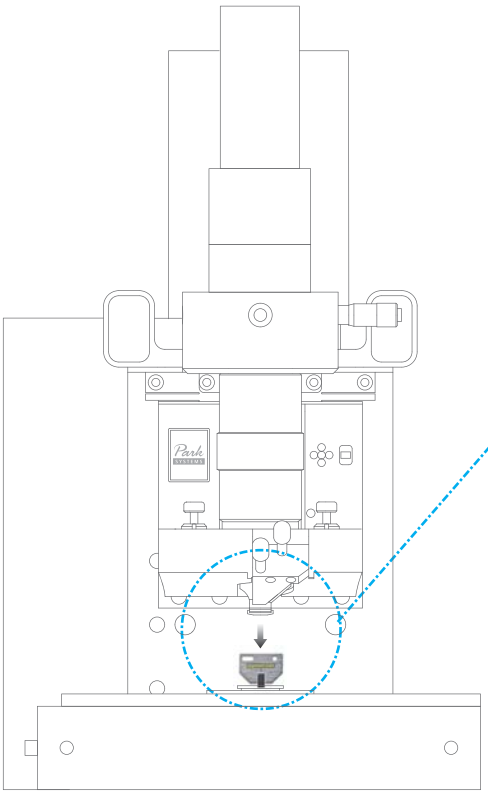

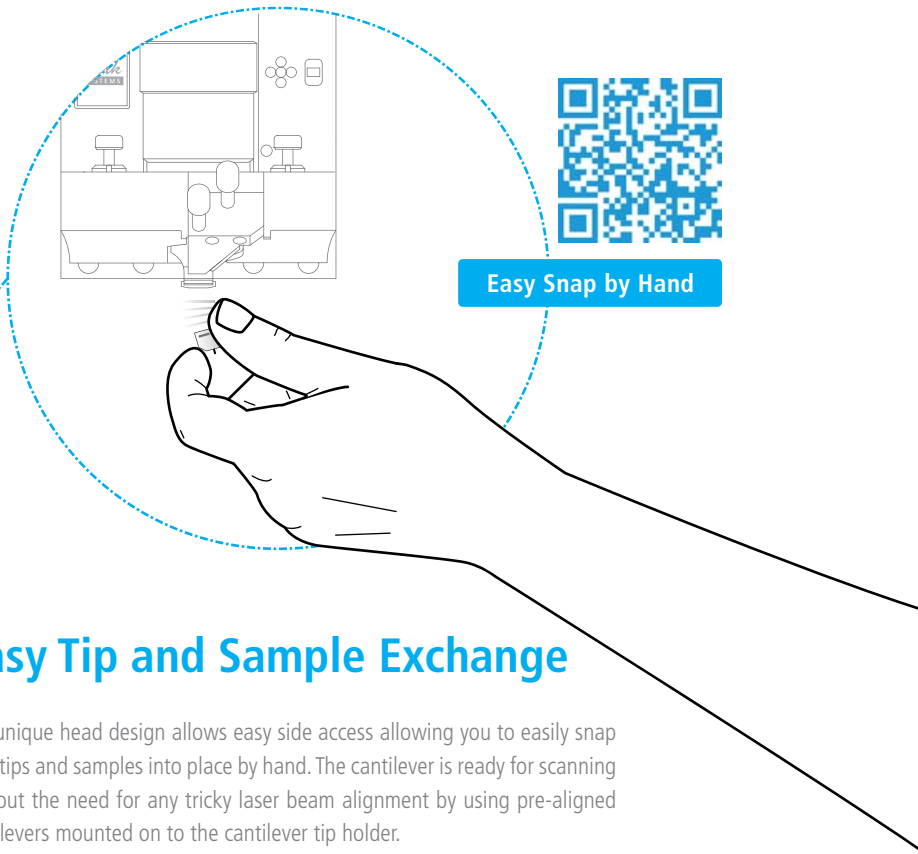

Easy Tip and Sample Exchange

The unique head design allows easy side access allowing you to easily snap new tips and samples into place by hand. The cantilever is ready for scanning without the need for any tricky laser beam alignment by using pre-aligned cantilevers mounted on to the cantilever tip holder.

Easy, Intuitive Laser Beam Alignment

With our advanced pre-aligned cantilever holder, the laser beam is focused on the cantilever upon placement. Furthermore, the natural on-axis top-down view, the only one in the industry, allows you to easily find the laser spot. Since the laser beam falls vertically on the cantilever, you can intuitively move the laser spot along the X- and Y-axis by rotating its two positioning knobs. As a result, you can easily find the laser and position it on PSPD using our beam alignment user interface. From there, all you will need is a minor adjustment to maximize the signal to start acquiring the data.

laser beam is always focused on the cantilever upon replacement

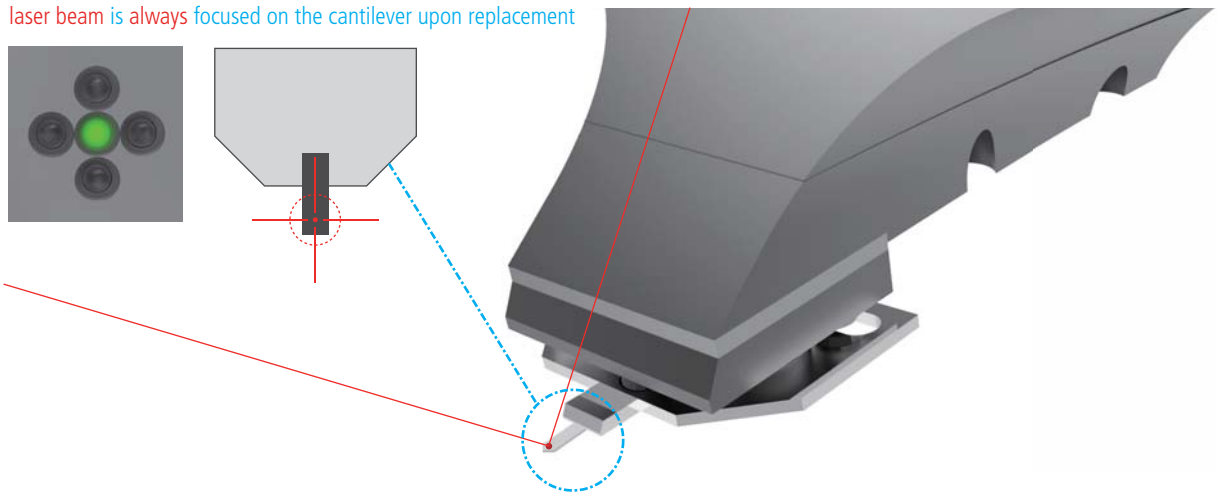

Park XE15

Power for any project

With a wide range of scanning modes and modular design, the Park XE15 has the power and flexibility you need for any project.

Surface Roughness Measurement

- True Non-Contact Mode
- Dynamic Force Mode

Electrical Characterization

- Conductive AFM (ULCA and VECA)
- Electric Force Microscopy (EFM)
- Piezoelectric Force Microscopy (PFM)
- Scanning Capacitance Microscopy (SCM)
- Scanning Kelvin Probe Microscopy (SKPM)
- Scanning Spreading Resistance Microscopy (SSRM)
- Scanning Tunneling Microscopy (STM)
- Time-Resolved Photo Current Mapping (Tr-PCM)

Thermal Characterization

- Scanning Thermal Microscopy (SThM)

Mechanical Characterization

- Force Modulation Microscopy (FMM)
- Force-Distance (F-d) Spectroscopy
- Force Volume Imaging
- Lateral Force Microscopy (LFM)
- Nanoindentation
- Nanolithography
- Phase Imaging

Magnetic Characterization

- Magnetic Force Microscopy (MFM)

Electrical and Other Sample Characterization Modes

Scanning Capacitance Microscopy (SCM)

Provides quantitative 2D dopant profiles

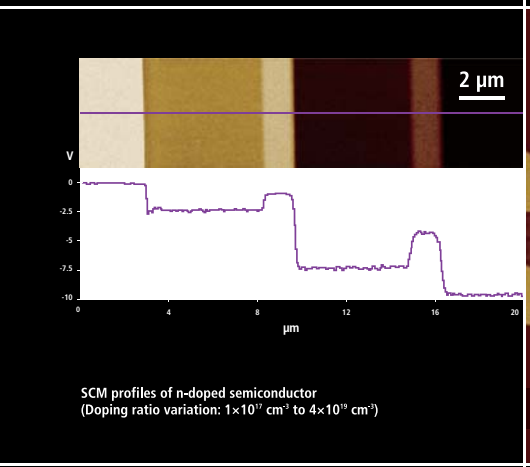

SCM profiles of n-doped semiconductor
(Doping ratio variation: 1×10^{17} cm^{-3} to 4×10^{19} cm^{-3})

Conductive AFM

Measures the conductivity across the sample regions

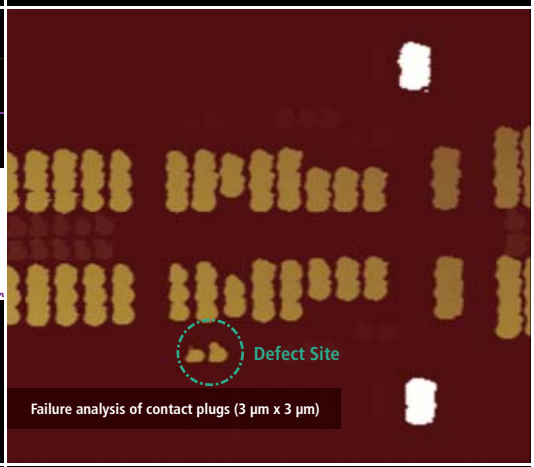

Failure analysis of contact plugs (3 μm x 3 μm)

Magnetic Force Microscopy (MFM)

Accurately view your sample's magnetic structure

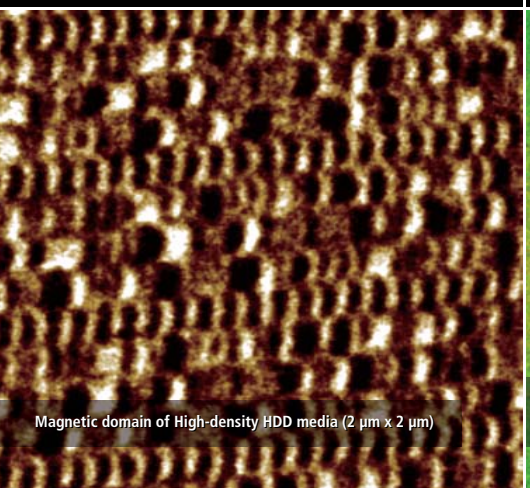

Magnetic domain of High-density HDD media (2 μm x 2 μm)

Scanning Thermal Microscopy (SThM)

Easily examine your sample's thermal conductivity.

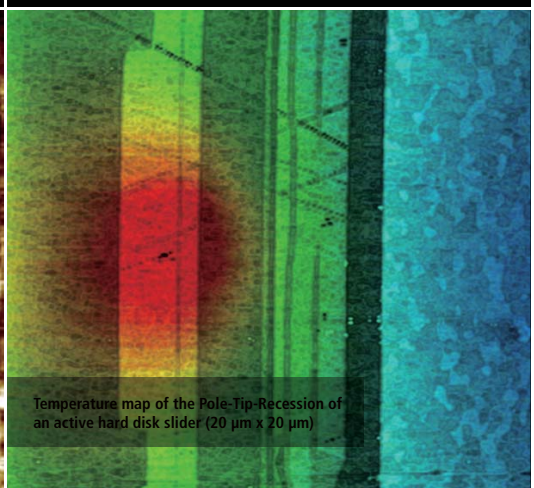

Temperature map of the Pole-Tip-Recession of an active hard disk slider (20 μm x 20 μm)

Surface Roughness Measurement

Si wafer

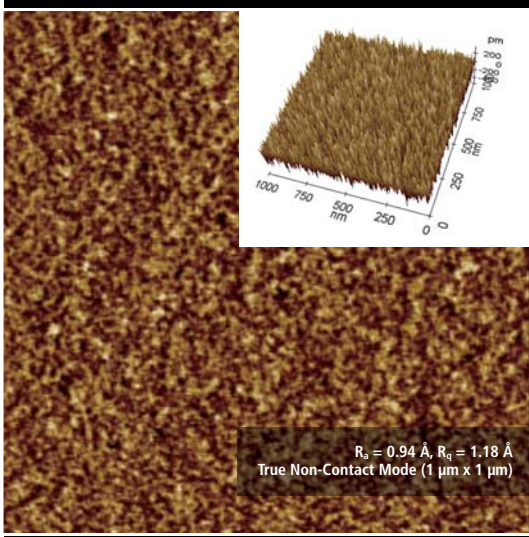

R_a = 0.94 Å, R_q = 1.18 Å
True Non-Contact Mode (1 μm x 1 μm)

SiC substrate

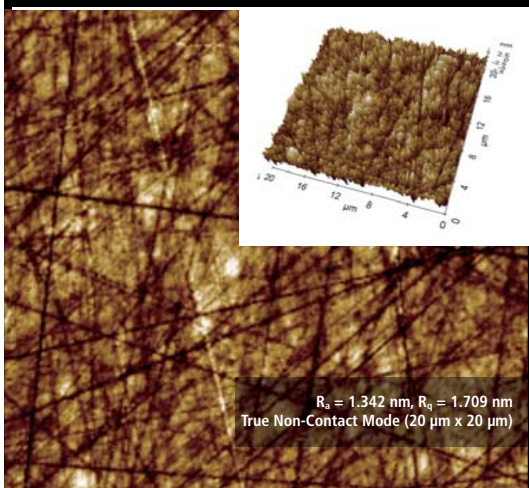

R_a = 1.342 nm, R_q = 1.709 nm
True Non-Contact Mode (20 μm x 20 μm)

Options



Active Temperature-controlled Acoustic Enclosure

- Innovative control brings the system quickly to its temperature equilibrium
- Temperature stability of less than 0.05 °C within10 minutes of closing AE door
- Includes an active vibration isolation system



Encoders for Motorized Stage

- The encoded XY stage travels in 1 µm resolution with 2 µm repeatability.
- The encoded Z stage travels in 0.1 µm resolution with 1 µm repeatability.



Sample Plates

- Vacuum grooves to hold wafers
- Sample dimension: Up to 200 mm (150 mm default)



25 µm Z-scanner Head

- Z scan range: 25 µm
- Resonant frequency: 1.7 kHz
- Laser type: LD (650 nm) or SLD (830 nm)
- Noise floor: 0.03 nm (typical), 0.05 nm (maximum)



XE Optical Head

- Optical access: top and side
- Z scan range: 12 µm or 25 µm
- Laser type: LD (650 µm) or SLD (830 µm)
- Noise floor: 0.03 nm (typical), 0.05 nm (maximum)
- Resonant frequency: 3 kHz (12 µm XE Head), 1.7 kHz (25 µm XE Head)



Clip-type Probehand

- Unmounted cantilever can be used
- Tip bias range: -10 V to + 10 V
- Tip bias function available for EFM and Conductive AFM
- Support all the standard and advanced modes but STM, SCM, and in-liquid imaging



Signal Access Module (SAM)

- Enables access to various input/output signals for AFM
- Scanner driving signal for the XY and Z scanners
- Position signal for the XY and Z scanners
- Cantilever deflection signals of the vertical/lateral direction
- Bias signal for the sample and the cantilever
- Driving signal for XE15
- Auxiliary input signal to the system

XE-Heads	12 µm XE-Head	25 µm XE-Head	XE Optical Head	Hysitron Triboscope Adaptor Head
Probehands	Clip-type Probehand	Liquid Probehands (open/closed)	SCM Probehand	STM Probehand
Liquid Cells	Universal Liquid Cell	Open Liquid Cell	Electrochemistry Cell	
Environmental Control	Heating & Cooling Stage	Heating Stage		
Accessories	Signal Access Module	Q Controller	Vacuum Chuck	Non-magnetic Sample Holder
	Cross-sectional Sample Holder	High Voltage Toolkit		

Park XE15
Specification

Scanner

XY scanner

Single-module flexure XY scanner with closed-loop control
Scan range: 100 µm × 100 µm

Z scanner

Guided high-force Z scanner
Scan range: 12 µm
25 µm (optional)

Vision

Direct on-axis vision of sample surface and cantilever
Coupled with 10× objective lens (20× optional)
Field-of-view: 480 × 360 µm
CCD: 1 Mpixel

Sample Mount

Sample size: Up to 200 mm
Thickness: Up to 20 mm

Electronics

High performance DSP: 600 MHz with 4800 MIPS
Maximum 16 data images
Maximum data size: 4096 × 4096 pixels
Signal inputs: 20 channels of 16 bit ADC at 500 kHz sampling
Signal outputs: 21 channels of 16 bit DAC at 500 kHz settling
Synchronous signal: End-of-image, end-of-line, and end-of-pixel TTL signals

Active Q control (optional)
Cantilever spring constant calibration (optional)
CE Compliant
Power: 120 W
Signal Access Module (Optional)

Options/Modes

Standard Imaging

- True Non-Contact AFM
- Basic Contact AFM
- Lateral Force Microscopy (LFM)
- Phase Imaging
- Intermittent (tapping) AFM

Chemical Properties

- Chemical Force Microscopy with Functionalized Tip
- Electrochemical Microscopy (EC-STM and EC-AFM)

Dielectric/Piezoelectric Properties

- Electric Force Microscopy (EFM)
- Dynamic Contact EFM (DC-EFM)
- Piezoelectric Force Microscopy (PFM)
- PFM with High Voltage

Force Measurement

- Force Distance (F-D) Spectroscopy
- Force Volume Imaging

Magnetic Properties

- Magnetic Force Microscopy (MFM)

Optical Properties

- Tip-Enhanced Raman Spectroscopy (TERS)
- Time-Resolved Photo Current Mapping (Tr-PCM)

Electrical Properties

- Conductive AFM
- I-V Spectroscopy
- Scanning Kelvin Probe Microscopy (SKPM/KPM)
- SKPM with High Voltage
- Scanning Capacitance Microscopy (SCM)
- Scanning Spreading-Resistance Microscopy (SSRM)
- Scanning Tunneling Microscopy (STM)
- Time-Resolved Photo Current Mapping (Tr-PCM)

Mechanical Properties

- Force Modulation Microscopy (FMM)
- Nanoindentation
- Nanolithography
- Nanolithography with High Voltage
- Nanomanipulation
- Piezoelectric Force Microscopy (PFM)

Thermal Properties

- Scanning Thermal Microscopy (SThM)

Accessories

Electrochemistry Cell
Universal Liquid Cell with Temperature Control
Sample Stages with Temperature Control
Magnetic Field Generator

Stage

XY travel range: 150 mm × 150 mm
Z travel range: 27.5 mm
Focus travel range: 20 mm, motorized
Optional precision encoders for repeatable XY positioning

Software

XEP

Dedicated system control and data acquisition software
Adjusting feedback parameters in real time
Script-level control through external programs (optional)

XEI

AFM data analysis software (running on Windows, MacOS X, and Linux)

Dimensions in mm

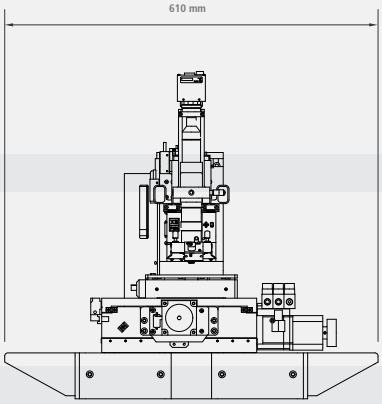

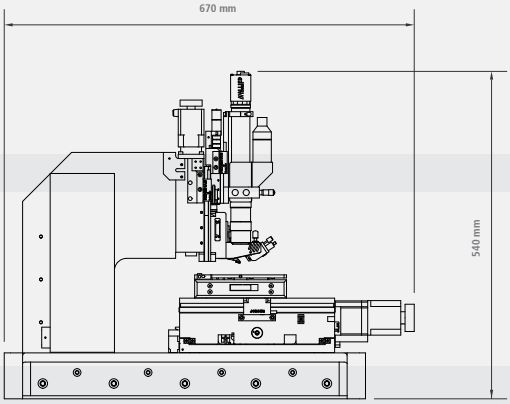

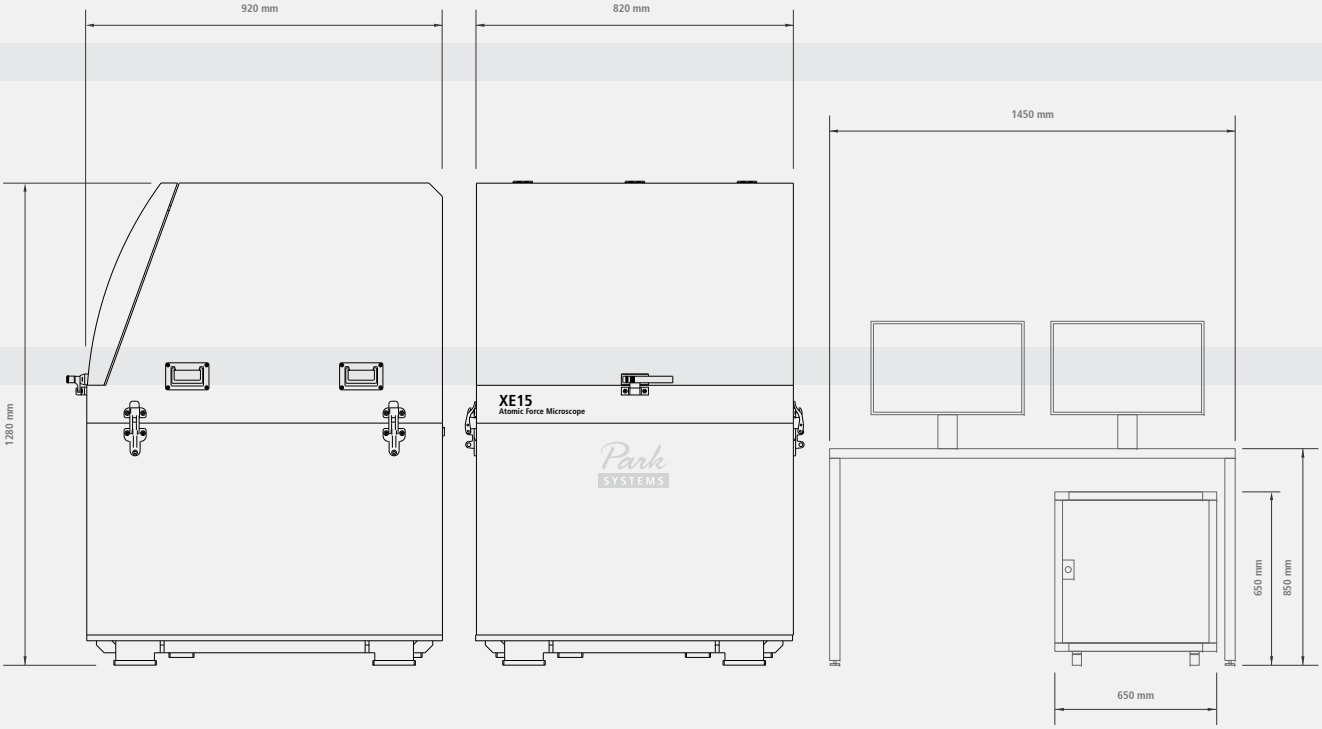

Park Systems

Dedicated to producing the most accurate and easiest to use AFMs

More than a quarter century ago, the foundations for Park Systems were laid at Stanford University where Dr. Sang-il Park, the founder of Park Systems worked as an integral part of the group that first developed AFM technology. After perfecting the technology, he then went on to create the first commercial AFM and later Park Systems was born.

Park Systems strives everyday to live up to the innovative spirit of its beginnings. Throughout our long history, we have honored our commitment to providing the most accurate and yet very easy to use AFMs, with revolutionary features like True Non-Contact™ mode, and many automated software tools. We are not simply content to rest on our past success. All of our products are designed with same care and creativity that went into our first, allowing you to focus on getting results without worrying about the integrity of your tools.

■ **The global headquarters is located at Korean Advanced Nanotechnology Center (KANC) in Suwon, Korea.**





Want to find out more about our world class nanoscale microscopy and metrology technology? Contact one of our representatives today:

ASIA

China: +86-10-6401-0651
India: +91-2266633915
Indonesia: +62-21-5698-2988
Malaysia: +603-8065-3889
Pakistan: +92-51-4444-112
Philippines: +632-463-6066
Saudi Arabia: +966-2-640-5846
Taiwan: +886-2-8227-3456
Thailand: +668-1424-3231
UAE: +971-4-339-2603
Vietnam: +84-4-35620516

EUROPE

France: +33-1-6953-8023
Germany: +49-6103-30098-0
Italy: +39-02-9009-3082
Israel: +972-3-923-9666
Switzerland: +41-22-788-9186
Romania: +40-733944144
Russia: +7 (495) 22-11-208
Spain and Portugal: +34-902-244-343
Turkey: +90-312-236-42-0708
UK an Ireland: +44(0)1372-378-822
Benelux, Scandinavia, and Baltics: +31-184-64-0000

OCEANIA

Australia and New Zealand: +61-2-9319-0122

AMERICAS

USA: +1-408-986-1110
Canada: +1-888-641-0209
Brazil: +55-11-4178-7070
Chile: +56-2-2245-4805
Colombia: +57-347-0060
Ecuador: +593-2-284-5287
Mexico: +(55) 4544-4441

Note: All specifications are subject to change without notice.
Please visit our website for the most up-to-date specifications.

Enabling Nanoscale Advances

GLOBAL HEADQUARTERS: +82-31-546-6800
AMERICAS HEADQUARTERS: +1-408-986-1110
JAPAN HEADQUARTERS: +81-3-3219-1001
SE ASIA HEADQUARTERS: +65-6634-7470
E-mail: inquiry@parkAFM.com
Web: www.parkAFM.com

Park SYSTEMS