● Please keep these instructions and review before using this controller.
● This instruction manual uses WARNING and CAUTION as signal words for safety.

WARNING WARNING indicates a potentially hazardous situation which, if not avoided, will result in death or serious injury.

1. In case of using this unit with machineries (warehouse, medical equipments, vehicle, train, airplane, nuclear power ot safety devices etc.), it requires installing fail-safe device.
▶It may result in serious damage, fire or human injury.
2. Use a rated voltage to prevent damage or trouble.
▶It may result in fire.
3. Check the number of terminal when connect each line and signal input.
▶It may cause fire or trouble.
4. Do not turn on the power until the wiring completed.
▶It may cause electric shock.
5. Do not repair, wiring or checkup when electric power on.
▶It may cause electric shock.
6. Installation the controller where there is no dust, corrosive or explosive gas, direct ray of the sun, mechanical vibration or shock present.
▶It may cause fire or explosive.
7. This controller must be mounted pannel.
▶It may cause electric shock.
8. Do not repair beyond of authorized technician.
▶It may cause trouble.

CAUTION CAUTION indicates a potentially hazardous situation which, if not avoided, will result in minor or moderate injury and at other times or serious injury, t may also be used to alert against unsafe practice.

1. Ensure the surrounding ambient operating temperature is 0~50℃.
▶It may cause fire or wrong operation.
2. Ensure the power supply for the controller does not fluctuate, Main supply voltage fluctuation not exceed ±10% of the normal voltage.
▶It may cause fire.
3. This controller shall not be used outdoors.
▶It might shorten the life cycle or given an electric shock.
4. When wiring connection, #20AWG (0,5mm2) should be used and screw bolt on terminal block with 0,74N.m strength.
▶It may result in malfunction or error.
5. Keep the controller away from high current and voltage circuits. The controller and connection wires (esp. compensation conductors and RTD lead wires) should be kept approximately 30cm away from high electric circuit to limit the possible affect of noise.
▶It may cause display fluctuation or error.
6. Do not use a place where temperature fluctuate or icing occurs. It may cause fire, explosive or error.
7. In cleaning the controller, do not use water or an oil-based detergent.
▶It might cause an electric shock or fire that will result in damage to the product.
8. Do not inflow dust or dregs into inside of this controller.
▶It may cause fire or trouble.
9. Installation Category **II**, Pollution Degree 2, Altitude over 0~2000m use.

ADVANCED PID TEMP. CONTROLLER CE FC



SDX Series

Thank you very much for selecting Sanup temperature controller. For your safety, please read the following before using.

SANUP ELECTRIC • URL: http://www.sanup.com • E-Mail: sanup@sanup.com

■ H.Q & Factory
240-42, Uijeongbu 2dong, Uijeongbu, Gyounggido, Korea
Tel. +82 31 876 4641~3
Fax. +82 31 876 4640

■ Sales Shop
42, Jangsadong Jongro Seoul. Korea
Tel. +82 2 2265 2298
Fax. +82 2 2272 9450

1 Features

SDX is support to very competitive price with advanced cotrol stability and various function. Especially easy usable by short key and very wide purpose for your process.

- Control start-stop mode — RUN/STOP
- Parameters or control setting lock — LOCK
- Control standby timer — Reservation Timer
- Control end timer — Control Stop Timer
- Manual control — Auto/Manual Control
- Short key — Short key
- Various alarm — Burn-Out/Time End etc.
- Triac direct control and SSR PWM output — New Control Output
- Call No. for easy set — Jump to Parameter

2 Ordering Code

MODEL	SIZE	-	CODE					SPEC.
SDX	□	-	□	□	□	□	□	Advanced PID Controller
	4							48(W)X48(H)X100(D) (mm)
	2							48(W)X96(H)X100(D) (mm)
	3							96(W)X48(H)X100(D) (mm)
	7							72(W)X72(H)X100(D) (mm)
	8							85(W)X100(H) (mm) *1
	9							96(W)X96(H)X100(D) (mm)
Input			U					Universal (TC/RTD or V/mA dc)
Range			0U					Full Range. See Input Table.
Control Output				M				Relay Output
				V				SSR Output
				C				4~20mA dc Output
				T				Triac Direct Drive Output
Power					F			100~240V ac. 50-60Hz
Optional						N		None
						A		Alarm 2
						P		PWM Control Output *2
						S		A+P (Alarm 2 + PWM Output)

Note 1. Only main board size.
2. In case of use SSR PWM, need to use Random Type SSR.
3. Recommand power element module made by SanRex Japan. (Model TG 35C60, PK50F120 etc.)

3 Functional Description

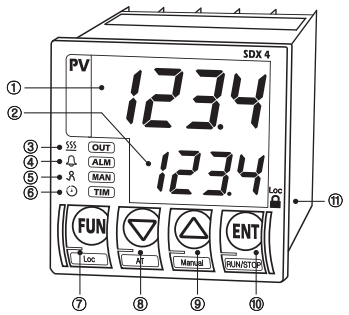

① PV: Process Value. 4-digit FND
② SV: Set Value. 4-digit FND
③ OUT: Control Out Lamp. LED
④ ALM: Alarm Lamp. LED
⑤ MAN: Manual Control Lamp. LED
⑥ TIM: Timer Operating Lamp. LED
⑦ FUN: Function /Set Lock Key
⑧ DOWN: Set Value Down /AT Start
⑨ UP: Set Value Up /Manual Control
⑩ ENT: Set Value Enter / Control Start-Stop
⑪ LOC: Setting Lock.

Note AL2 sign lamp is same with AL1 on ALM.

4 Function Parameter

GROUP	SIGN	FUNCTION	UNIT	SET RANGE	INIT.	Call No.
1. Input	INPT	Input signals	-	1~23(see input table)	1	11
	UNIT	Unit	-	℃/ ℉	℃	12
	FR-H	Setting high limit	℃	within range	1370	13
	FR-L	Setting low limit	℃	(FR-H>FR-L)	-200	14
	DDP	Decimal point	-	0~3	3	15
	SC-H	High limit (dc V)	-	-1999~9999	5.000	16
	SC-L	Low limit (dc V)	-	(SL-H>SL-L)	1.000	17
	FILT	Input filter	sec.	OFF, 1~100	OFF	18
	REV	Input revision	℃	within range	0	19
2. Output	ACT	Control mode	-	REV/DIR/REVr/DIRr	REV	21
	CYLT	Output cycle time	sec.	1~100	20	22
	HYS	Hysteresis	℃	0~100/0.0~100.0	1	23
	PO-O	Burn-out output	%	0.0~100.0	0.0	24
	OL-H	Output high limit	%	OL-L+1digit~100.0	100.0	25
	OL-L	Output low limit	%	0.0~OL-H-1digit	0.0	26
3. Alarm	AL1T	Alarm 1 mode	-	OFF, 1~23	1	31
	AL2T	Alarm 2 mode	-	(see alarm table)	2	32
	AL1H	Al1 hesteresis	℃	0~100/0.0~100.0	1	33
	AL2H	Al2 hysteresis	℃	(by input signal)	1	34
	AL1	Al1 set	℃	within range	1370	35
	AL2	Al2 set	℃		-200	36
4. PID	P	Proportional	℃	ON/OFF,0.1~999.9	10	41
	I	Integral	sec.	OFF, 1~3600	200	42
	D	Differentiation	sec.	OFF, 1~3600	50	43
	MR	Manual reset	%	0.0~100.0	50.0	44
	ARW	Anti-reset windup	%	AUTO, 0.1~100.0	AUTO	45
5. Timer	TMMD	Timer start mode	-	PV/SV	PV	51
	TIMD	Time unit	-	MM.SS/HH.MM	MM-SS	52
	TRMD	Timer mode	-	OFF/ON	OFF	53
6. Control	STMD	Control start mode	-	AUTO/MAN	AUTO	61
	RMTM	Ramp time	min.	OFF, 1~9999	OFF	62
	WAIT	Wait time	min.	OFF,ON. 1~9999	OFF	63
	LBA	Loop break alarm	sec.	OFF.1~6000	OFF	64
	PAS	Set password	-	0~9999	0	65
	INIT	Set initializing	-	NO/YES	NO	66

Entering Parameter Group

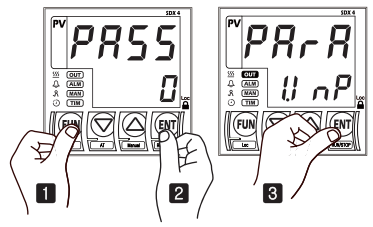

1 click FUN then will be display PASS

2 set PASS No. and click ENT factory set no. is 0.

3 click ENT for into the group

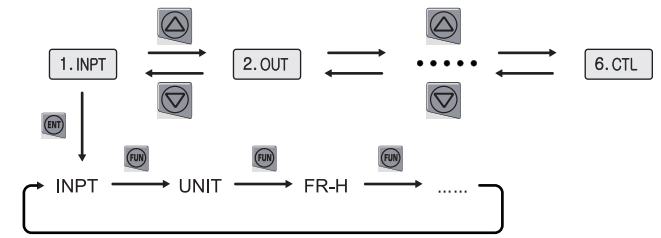

Ramp Output (RMTM)

For use ramp control output, ramp time set to 6.CTL>RMTM.
Then control output is increment during set time.
Case of use Timer function, need to consider control time.

Timer Statr Mode (TMMD)

You are able to select to time start mode on SV or PV.
Set to 5.TIM>TMMD and select PV or SV. If set PV, time count is start with control start. If set SV, time count is start at SV-PV≤3℃.

Control Start Mode (STMD)

Set to Control Start Mode when power on.
Set AUTO, control will start at same time with AC power ON.
Set MAN, control will start at RUN key. Even if AUTO, not start if set standby time.

WAIT TIME (WAIT)

Timer start mode is set 'SV' and END Timer is enabled. If PV is different with SV, END Timer is not start. Set to wait time on 6.CTL>WAIT. It will be enable with control RUN. But wait time is not included END Timer time.

Standby to Ending Time Control (TRMD)

Using for connecting Standby Timer to End Timer.
Set to 6.CTL>TRMD. Set ON is connecting and set OFF is separately timer.
Set ON, control will be start after standby time and then control wil be end after end time.

Control Loop Break Alarm (LBA)

Set to LBA waiting time on 6.CTL>LBA for control loop break detecting alarm.
-Alarm Condition (control output is 100%)
1.Heating: PV is not increment 3℃ or more
2.Cooling: PV is not decrement 3℃ or less
If alarm mode set to LBA, relay output available.

5 Input type & Measurment range

NO	Input Signals	Celsius (℃)	Fahrenheit (°F)
1	K Type T.C	-200~1370℃	-300~2500°F
2		-199.9~999.9℃	0~2300°F
3	J Type T.C	-199.9~999.9℃	-300~2300°F
4	E Type T.C	-199.9~999.9℃	-300~1800°F
5	T Type T.C	-199.9~400.0℃	-300~750°F
6	R Type T.C	0~1700℃	32~3000°F
7	Din PT100	-200~640℃	-300~1180°F
8		-199.9~640.0℃	-300~1180°F
9	1-5 Vdc, 4-20mA	-1999~9999	
10	0-10 Vdc	-1999~9999	

Note 1. Input type set is available on control stop and related parameters will be change to factory set.
2. Need to check measuring range at K T.C and RTD.

6 Specifications

Items		Specifications
Power	Power	100~240Vac (90~264Vac)
	Frequency	50~60Hz
	Power Consumption	6.0w max. 10VA less
	Insulation	between primary & secondary terminal: 500Vdc 20MΩ over
		between primary & ground terminal: 500Vdc 20MΩ over
		between secondary & ground terminal: 500Vdc 20MΩ over
	Dielectric Strength	between primary & secondary terminal: 2300Vdc 50/60Hz 1min.
		between primary & ground terminal: 2300Vdc 50/60Hz 1min.
		between secondary & ground terminal: 1500Vdc 50/60Hz 1min.
Input	Input	T.C: K/J/E/T/R RTD:Din Pt100/Pt100Ω Vdc: 1-5V/0-10V/4-20mA(use Res.)
	Scan Time	250ms
	Impedance	T.C: 1MΩ
	Accuracy	T.C: ±0.3%+1digit or 3℃
		RTD: ±0.2%+1digit
Output	Relay	250Vac. 2A(R load)
	SSR	20Vdc pulse. 20mA max.
	Current	4-20mA. 600Ω max.
	Alarm	250Vac 1A(R load)
Installation Condition	Continuous Vibration	5-14Hz: forward width 1.2m max. 4-150Hz: 4.9m/cm2
	Vibration	14.7m/cm2 15sec. max. each 3 direction
	Shock	147m/cm2 11msec. max. 6 direction 3 times
Operating Condition	Temperature	0~50℃
	Humidity	35~85%RH. no condensation
	Influence of Magnetic	400AT/m max.
	Warm-up Time	30min. min.
Operating Environment	Thermocouples	±1μV/℃ or ±0.01%/℃ of F.S
	RTD	±0.05Ω/℃
	Analog Output	±0.05%/℃ of F.S
Storage	Temperature	-25~70℃
	Humidity	5~95%RH. no condensation

Note 1. When parameters setting change, doing on control stop.
2. Parameters initializing will be change to factory set value, so need to deep consideration.
3. Set LBA, Bout and Tend, not available alarm hysteresis and alarm set.

7 Alarm Type

NO	Kind of Alarm	Operation
0	Alarm OFF	Alarm OFF
1	High Alarm	PV≥AL→Alarm ON
2	Low Alarm	PV≤AL→Alarm ON
3	Deviation High Alarm	PV≥SV+AL→Alarm ON
4	Deviation Low Alarm	PV≤SV+AL→Alarm ON
5	Deviation High Alarm(Rev.)	PV≥SV+AL→Alarm OFF
6	Deviation Low Alarm(Rev.)	PV≤SV+AL→Alarm OFF
7	Deviation High/Low	SV-AL≥PV or PV≥SV+AL→Alarm ON
8	Deviation Band	SV-AL≤PV≤SV+AL→Alarm ON
9	High Alarm(Rev.)	PV≥AL→Alarm OFF
10	Low Alarm(Rev.)	PV≤AL→Alarm OFF
11	Standby High Alarm	PV≥AL after standby→Alarm ON
12	Standby Low Alarm	PV≤AL after standby→Alarm ON
13	Standby Deviation High	PV≥SV+AL after standby→Alarm ON
14	Standby Deviation Low	PV≤SV+AL after standby→Alarm ON
15	Standby Deviation High(Rev.)	PV≥SV+AL after standby→Alarm OFF
16	Standby Deviation Low(Rev.)	PV≤SV+AL after standby→Alarm OFF
17	Standby Deviation High/Low	SV-AL≥PV after standby or PV≥SV+AL→Alarm ON
18	Standby Deviation Band	SV-AL≤PV≤SV+AL after→Alarm ON
19	Standby High Alarm(Rev.)	PV≥AL after standby→Alarm OFF
20	Standby Low Alarm(Rev.)	PV≤AL after standby→Alarm OFF
21	Loop Brake Alarm	Control loop brake→Alarm ON
22	Burn-Out Alarm	Sensor brake→Alarm ON
23	Timer End Alarm	Timer end→Alarm ON

Note 1. If set alarm is 21, 22, or 23, not available alarm hysteresis and alarm set.
2. 22 Burm-Out amarm is ON due to sensor break or scale over.

8 Dimensions & Panel cut

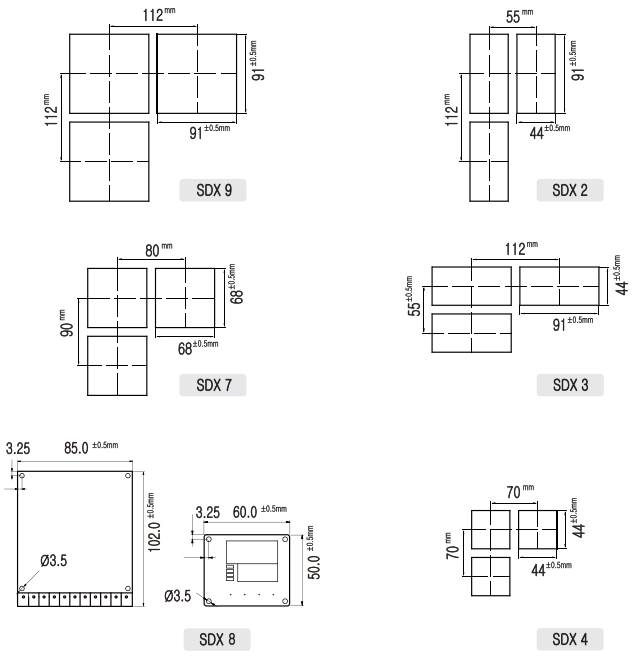

9 Terminal Arrangement

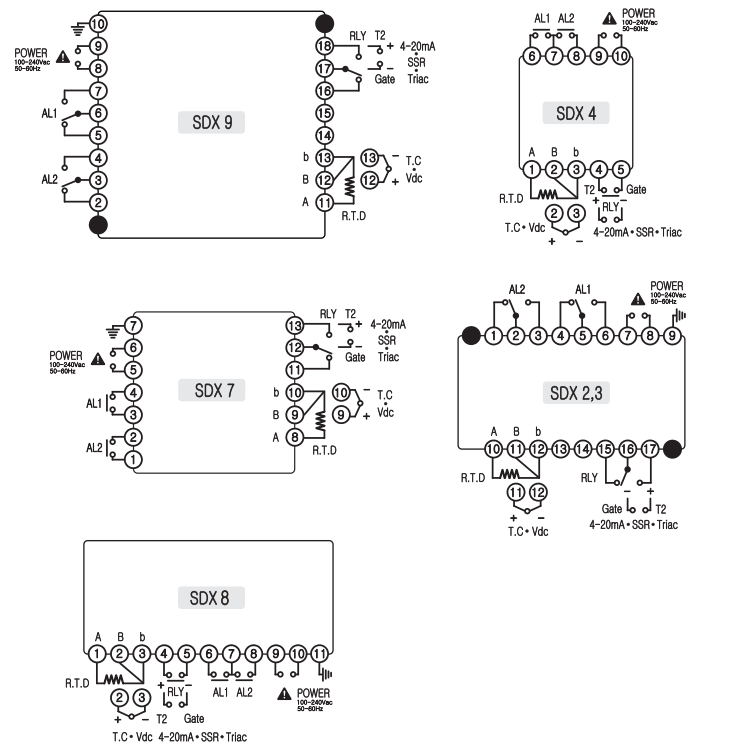

10 Wiring of TRIAC

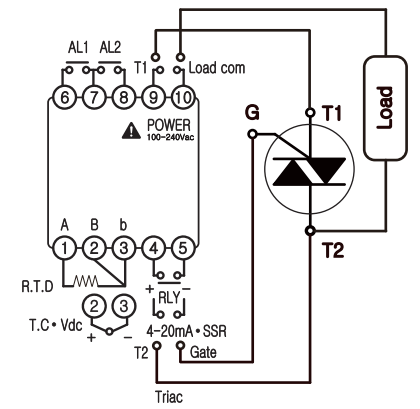

Note
1. Be careful when wiring T1. T2 and G, it may cause of explosion Triac .
2. Use standard size for wiring terminals and wire.
3. Recommand 'O' ring terminals for strengthen wiring.
4. Use standard tools for wiring. It may cause of trouble.
5. When working wiring, must cut off electric power. And careful terminal no. according to user manual.

SDX Series Parameters Set

■ Parameter Group Table

1. Input

C.11	sensor type	InPt	i
C.12	display unit	Unit	°C
C.13	input high limit	Fr-H	1370
C.14	input low limit	Fr-L	-200
C.15	decimal point	dP	3
C.16	scale high limit	SC-H	5000
C.17	scale low limit	SC-L	1000
C.18	input filter time	FiLt	oFF
C.88	input revision	rEV	0

2. Output

C.21	control mode	Act	rEV
C.22	control cycle	CYLt	i
C.23	hysteresis	HYS	i
C.24	burn-out output	Po-o	oO
C.25	output high limit	o1-H	1000
C.26	output low limit	o1-L	00

3. Alarm

C.31	alarm 1 mode	AL1t	i
C.32	alarm 2 mode	AL2t	2
C.33	alarm 1 hys.	AL1H	i
C.34	alarm 2 hys.	AL2H	i
C.35	alarm 1 set	AL1	1370
C.36	alarm 2 set	AL2	-200

4. PID Set

C.41	P band	P	100
C.42	I time	i	200
C.43	D time	d	50
C.44	manual reset	mr	500
C.45	ARW	Ar-W	Auto

5. Timer

C.51	timer start	tmrd	Pb
C.52	time unit	tiMd	mmSS
C.53	timer connection	trmd	oFF

6. Control

C.61	start mode	Stmd	Auto
C.62	ramp time	rAtE	oFF
C.63	wait time	WAit	oFF
C.64	roop break	LbA	oFF
C.65	set pass no.	PAS	0
C.66	initializing	Init	no

INPUT

NO	Input Signals	Celsius (℃)	Fahrenheit (°F)
1	K Type T.C	-200~1370℃	-300~2500°F
2		-199.9~999.9℃	0~2300°F
3	J Type T.C	-199.9~999.9℃	-300~2300°F
4	E Type T.C	-199.9~999.9℃	-300~1800°F
5	T Type T.C	-199.9~400.0℃	-300~750°F
6	R Type T.C	0~1700℃	32~3000°F
7		-200~640℃	-300~1180°F
8	Din PT100	-199.9~640.0℃	-300~1180°F
9	1~5 Vdc, 4~20mA	-1999~9999	
10	0~10 Vdc	-1999~9999	

Note

1. Set change input type is available on only Control Stop mode. Related all parameters will be initializing.
2. Call no. 15, 16, 17 will be display when Vdc input.
3. P, I and D value will be auto set after auto-tuning.
4. C.XX sign is call no. for jump to parameter.

■ Enter Parameter Group

1. click (FUN) will be display PASS
2. set pass no. Factory set is "0".
3. click (ENT) then enter Input Group.
4. enter parameter group (ENT)

■ Jump to Parameter by CALL no.

1. press 3 sec. and set pass no. and click (ENT)
2. set call no. ( ) (ex. input high limit. call no. 13)
3. press (ENT) than jump to FR-H (input high limit)
4. set FR-H value and click (ENT)
5. click (FUN) then return to CALL.
6. press 3 sec. return to control mode.

Note see call no. on parameter table

12 Short Key

	Lock/Unlock	AT Start/Stop	Auto/Manual	Run/Stop
Display	123.0 / 123.0 — blinks dot.	123.0 / -At- — blink AT and SV	123.0 / 80.0 — display only manual control mode	123.0 / StoP — sign change to run
Function	This is for protection user set parameters. Same way LOCK and UNLOCK.	AT is necessory when first time operating. AT will be auto stop after finish. Same way AT START and STOP.	'Auto' mode is control by SV. 'Manual' mode is control by set output value. Same way AUTO and MANUAL mode.	During power on, you can start or stop control. At STOP mode, control output will be off. Same way RUN and STOP.
Short Key	(ENT) 1 keep click first and then click 2 (FUN), (▽) or (△)			(ENT) 1 click over 2 sec.
Front LED	MAN Manual Control Mode sign LED : LED ON when manual control.			

Control start/stop

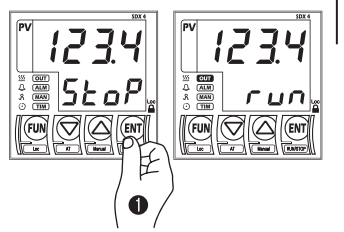

(ENT) 3sec.

Control will be start (stop) after STOP (RUN) LED blink 3 sec.

AT start/stop

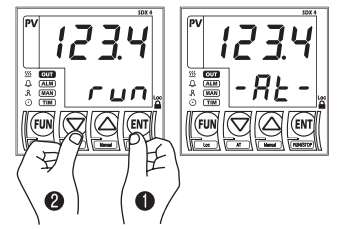

(ENT) + (▽) 3sec.

AT start (stop) after AT LED blink 3 sec.

Standby timer set

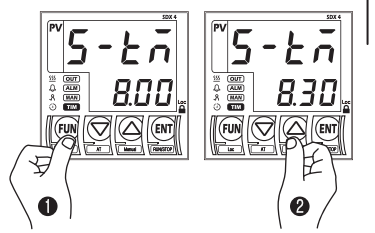

(FUN) Change to S-TM mode (TIM blink)

(▽) (△) set and (ENT) for settlement

Standby timer start/stop

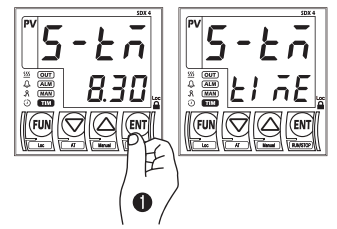

(ENT) 3 sec. (TIM ON)

Timer start (stop) after 'TIME' sign blink 3 sec.

End timer set

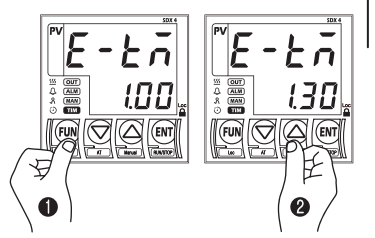

(FUN) Change to E-TM mode (blink TIM)

(▽) (△) set and (ENT) for settlement

End timer statr/stop

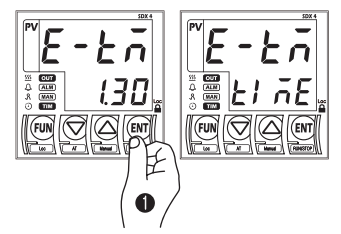

(ENT) 3 sec. (TIM LED ON)

Timer start (stop) after 'TIME' sign blink 3 sec.

Key lock/unlock

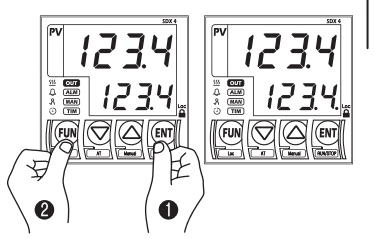

(ENT) + (FUN) 3 sec.

Key lock/unlock with Loc LED ON/OFF

Manual/Auto Control

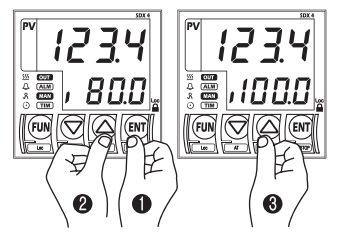

(ENT) + (△) 3 sec.

Manual (Auto) control mode after 'MAN' LED ON (OFF).

PWM Output Wiring

TRIAC

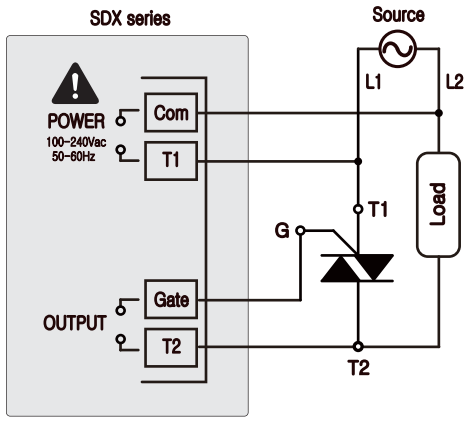

Circuit fixed for TG35C60/TG25C60 by SanRex® Japan.
Controller and Triac source power should be same.

SCR Module

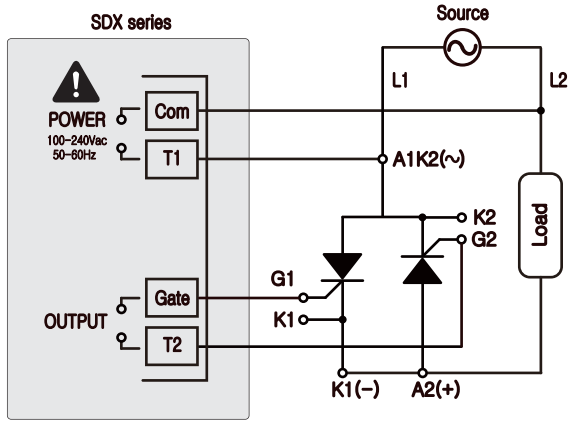

Circuit fixed for PK series by SanRex® Japan.
(Ex. PK 35 F 120. PK 55 F 120. PK 55 FG 160)
Controller and SCR module source power should be same.

Random Type SSR

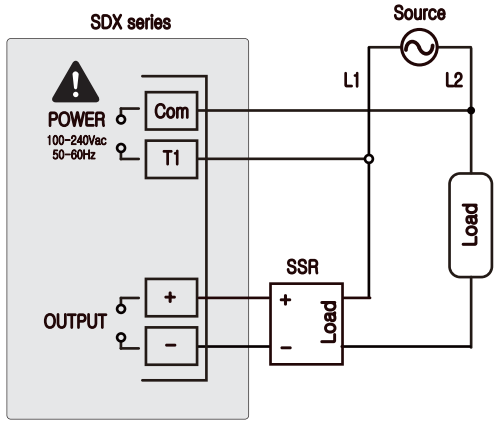

Need to use Random type SSR.
Controller and SSR source power should be same.