STD series

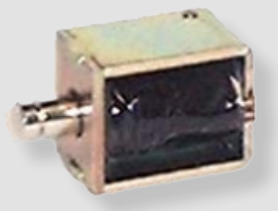

STD-06A

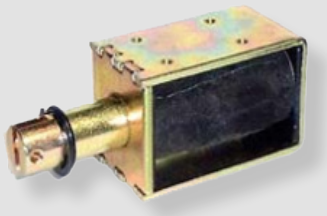

STD-12A

How to Order

STD - 06 A [ ] 12V

① ② ③ ④

① Rod diameter

06	Ø6
08	Ø8
10	Ø10
12	Ø12
16	Ø16

② Rod type

A	Standard
E	E-Type

③ Spring

Nil	Without spring
S	With spring

④ Voltage

12V	DC 12V
24V	DC 24V

Specifications

Model	STD-06A	STD-06AS	STD-08A	STD-08AS	STD-10A	STD-12E	STD-12ES	STD-16A
Stroke	5mm	5mm	6mm	6mm	8mm	10mm	10mm	15mm
Voltage	DC12V,24V							
Coil insulation	Class A							
Insulation resistance	≥ 100M Ohm at 500V (Room temperature and general humidity)							
Withstand voltage	AC1800V for 1 sec							
Temperature rise	≤65℃ at 2.1W		≤65℃ at 4.0W		≤65℃ at 4.2W	≤65℃ at 6.0W		≤65℃ at 10.0W
Weight	40g	42g	90g	93g	122g	210g	215g	430g

Applications

- Inter-Lock [open/close] : Banding machine, game machine, conveyer
- Auto sorting machine: Food sorting machine
- Brake : NC machine, lift, hoist, milling and etc.
- Clutch : Safety device, breaker, NC machine
- Lever : Automatic machine, counter
- Punch, Press machine : Riveting machine, punch machine
- Feeder : Air cleaner, refrigerator, packing machine

Features

- Great rated load with its light weight and small size design.
- Low operation impact reduce machine noise.
- Cost-effective design with simple structure design.

Rated Load & Temperature Rise Charateristic

STD-06A

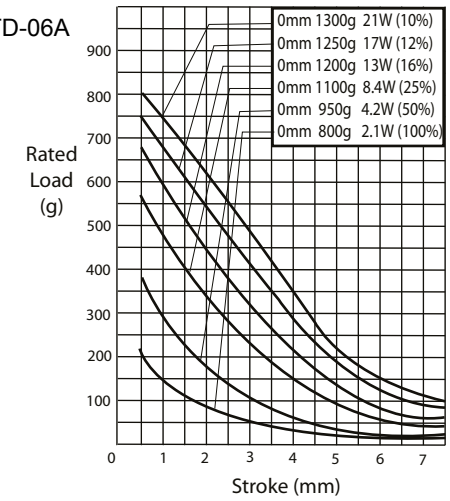

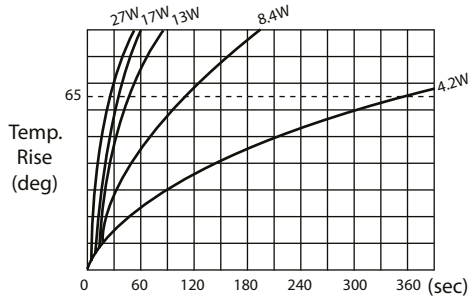

STD-08A

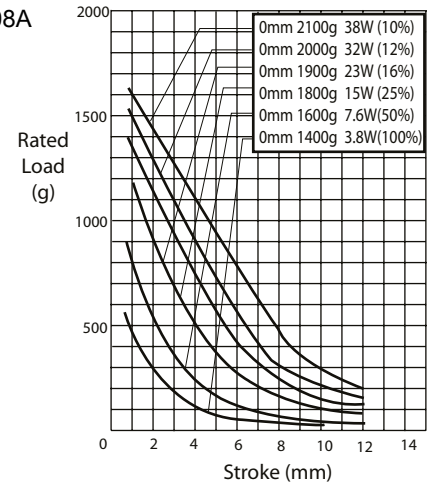

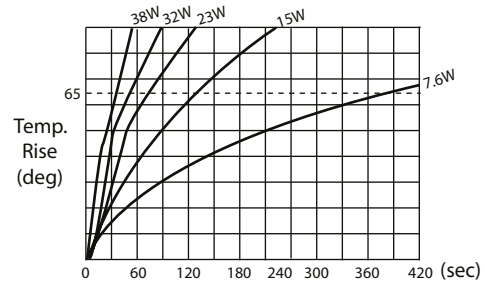

STD-10A

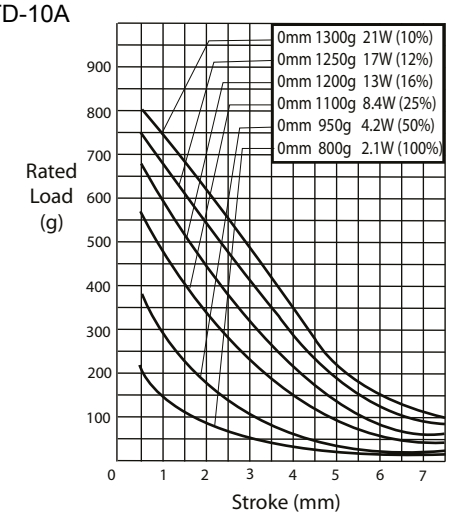

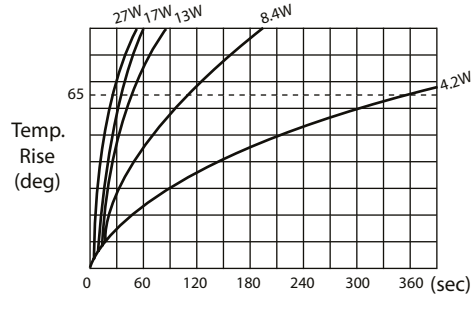

STD-12E

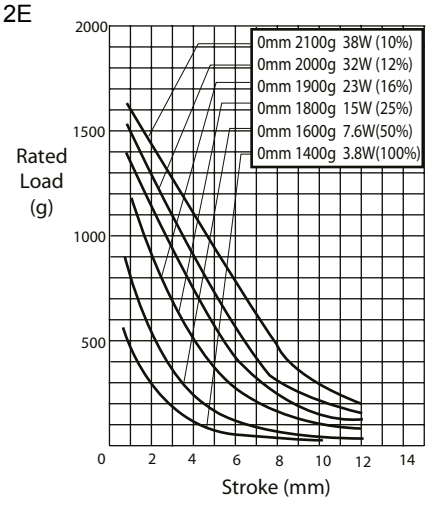

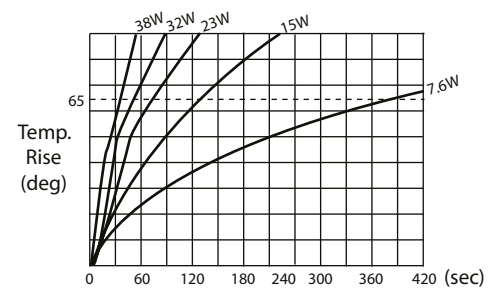

Rated Load & Temperature Rise Charateristic

STD-16A

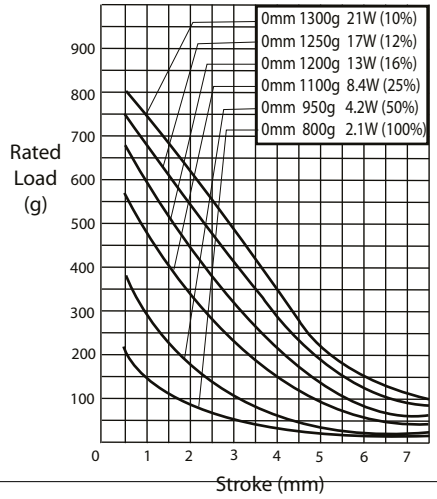

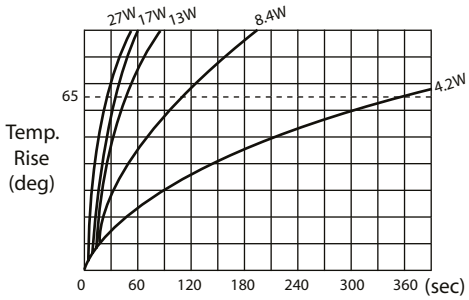

Dimensions

STD-06A

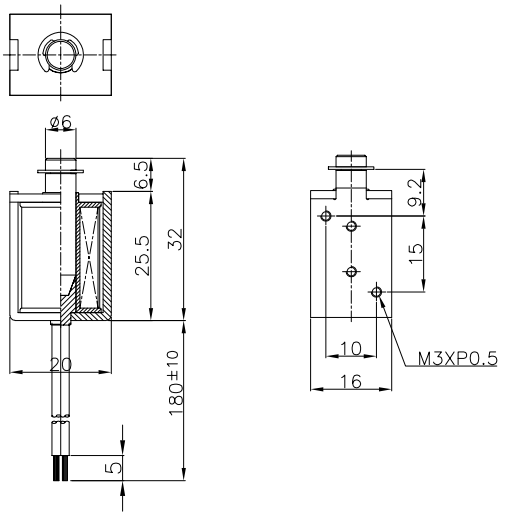

STD-08A

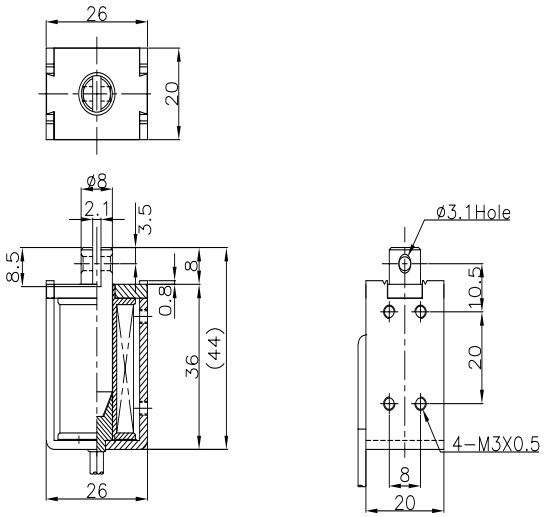

Dimensions

STD-10A

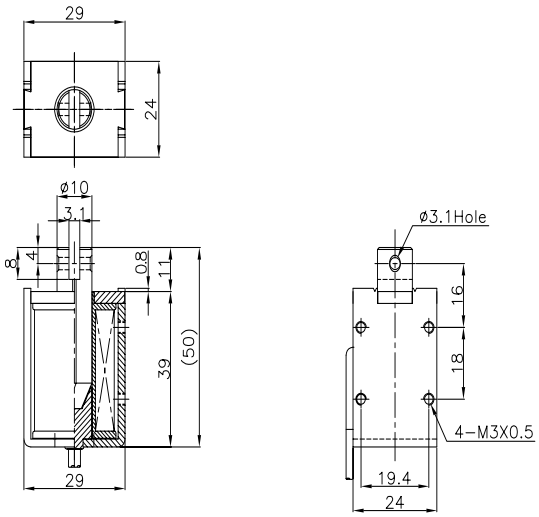

STD-12E

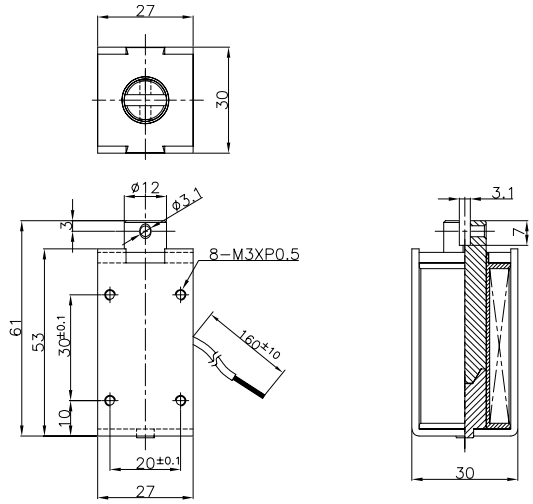

STD-16A

