60HZ GSTH Draning pump

Specifications

MODEL	Output (KW)	Caliber (MM)	pump-up head (M)	capacity of pum (L/Min)	Weight (kg)
GSTH 22-4	22	100	60	1.0	410
GSTH 30-4	30	100	70	1.0	450
GSTH 22-6	22	150	35	2.0	420
GSTH 30-6	30	150	35	2.7	450
GSTH 37-6	37	150	60	2.0	570
GSTH 45-6	45	150	60	2.5	610
GSTH 55-6	55	150	90	2.0	860

MODEL	Output (KW)	Caliber (MM)	pump-up head (M)	capacity of pum (L/Min)	Weight (kg)
GSTH 75-6	75	150	105	2.0	930
GSTH 90-6	90	150	120	2.0	960
GSTH 37-8	37	200	35	3.6	580
GSTH 45-8	45	200	35	4.5	620
GSTH 55-8	55	200	50	4.0	870
GSTH 75-8	75	200	60	4.5	940
GSTH 90-8	90	200	70	4.5	970

Performance Curve

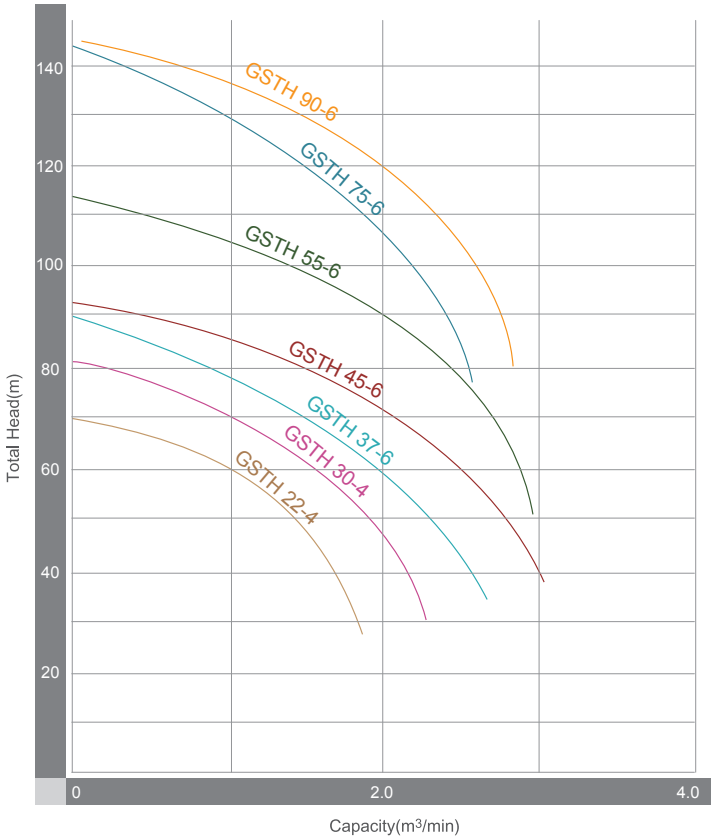

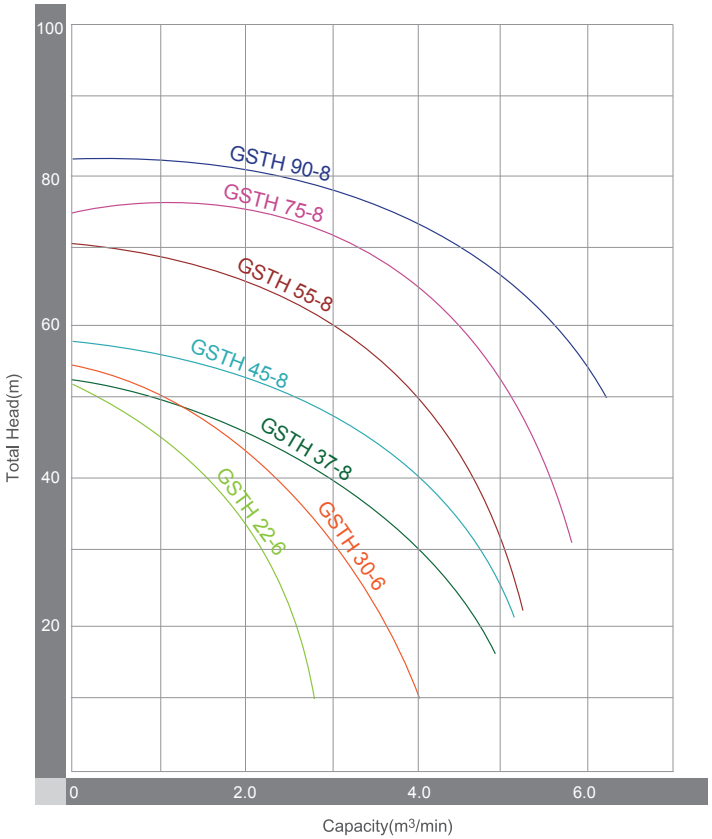

Dimension of pump

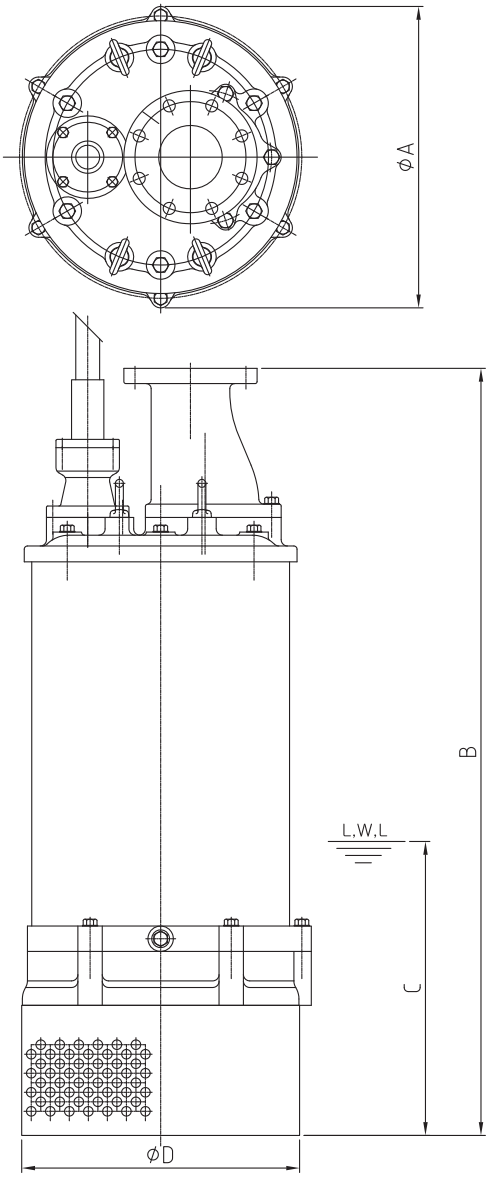

MODEL	A	B	C	D
GSTH 22-4	470	1350	270	470
GSTH 30-4	470	1350	270	470
GSTH 22-6	470	1350	270	470
GSTH 30-6	470	1350	270	470
GSTH 37-6	550	1430	300	550
GSTH 45-6	550	1430	300	550
GSTH 55-6	620	1510	360	560
GSTH 75-6	620	1510	360	560
GSTH 90-6	620	1510	360	560
GSTH 37-8	550	1430	300	550
GSTH 45-8	550	1430	300	550
GSTH 55-8	620	1510	360	560
GSTH 75-8	620	1510	360	560
GSTH 90-8	620	1510	360	560

*상기 치수는 제작에 따라 다소 차이가 날 수 있습니다.