H.I.D Lighting Fixtures
EA Series

Wet Locations
Factory Sealed
NEMA 3, 3R, 7



< EA >

❖ Type of Explosion-proof
Flameproof (Ex d IIB T4 H_2)
Flameproof (Ex d IIC T4 H_2)

❖ Standard Materials

- Enclosure : Die casting aluminium alloy
- Globe : Heat resistant hard glass
- Inner Reflector : High purity aluminium
- Guard : Stainless steel

❖ Standard Finish

- MUNSELL No. 7.5BG 6/1.5
- If you want another color, contact us please.

❖ Application

EA Series lighting fixture are used ;

- in heavy process industries having environments where flammable or explosive vapors or gases, or where combustible dusts are present.
- in paint spray booth suitability provides efficient, economical HID lighting for paint spray areas.
- in hazardous areas, both indoors and outdoors where long life and low maintenance costs are desired.
- in hazardous locations requiring elevated ambient capability.
- in marine applications where water spray and corrosive atmospheres are considerations.

❖ Features

- Lighting unit and ballast are constructed separately so as to protect the ballast from the heat of the lamp.
- Base of the body and the top of the globe holder have accurate tapered cylindrical surfaces and are secured by four socket head captive screw.
- Lighting unit is screwed onto the top of the mounting box and the ballast to the side.
- Pendant mounting module equipped with integral hub set screws for vibration resistance.
- Globe assembly is securely hinged to the body.
- Globe assembly is securely hinged to the body.
- Easy installation and maintenance.
- Hinged assembly allows the fixture to hang free during installation to permit the use of both hands when wiring.
- Can use compact fluorescent lamp 45W instead of HID lamp without external ballast.

❖ Compliance & Certification

- IEC 60079-0, 1
- NEMA 3, 3R, 7
- IP 55
- Certified by KOSHA (Korea Occupational Safety & Health Agency), KGS (Korea Gas Safety Corporation), and the others.

❖ Technical Data

Electrical Rating	
Rated Voltage	AC110V/ 220V/ 240V (※ See Below)
Rated Wattage	100W/ 150W/ 175W/ 200W/ 250W/ 400W
Rated Frequency	50Hz/ 60Hz
Entry Size	1/2", 3/4", 1"

※ Also you can order various voltage :
110V/ 120V/ 208V/ 220V/ 240V/ 277V/ 460V

❖ Weight

Mounting Type	Catalog No.	Weight
Small (Ceiling)	EANL 2215	17.3 kg
Large (Ceiling)	EAML 2240	28.3 kg

☞ If you need more information, contact us please.

❖ Lamp Replacement



Copyright by NAMBUK Electric Co., LTD. 2004

❖ Ordering Number

Lamp	Watt	Pendant	Ceiling	90° Bracket	40° Bracket	Certification
High Pressure Sodium	150	EANL 2115	EANL 2215	EANL 2315	EANL 2415	Ex d IIC T4
	200	EANL 2120	EANL 2220	EANL 2320	EANL 2420	
	250	EANL 2125	EANL 2225	EANL 2325	EANL 2425	
	400	EANL 2140	EANL 2240	EANL 2340	EANL 2440	Ex d IIB T3
Metal Halide	175	EAHL 2117	EAHL 2217	EAHL 2317	EAHL 2417	Ex d IIC T4
	250	EAHL 2125	EAHL 2225	EAHL 2325	EAHL 2425	
	400	EAHL 2140	EAHL 2240	EAHL 2340	EAHL 2440	Ex d IIB T3
Mercury Vapor	200	EAML 2120	EAML 2220	EAML 2320	EAML 2420	Ex d IIC T4
	250	EAML 2125	EAML 2225	EAML 2325	EAML 2425	
	400	EAML 2140	EAML 2240	EAML 2340	EAML 2440	Ex d IIB T3

❖ Dimension

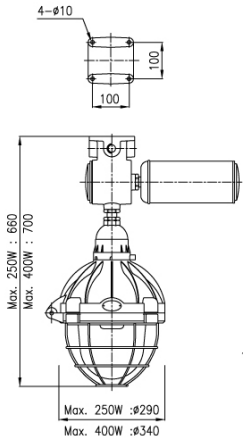

<Ceiling Type>

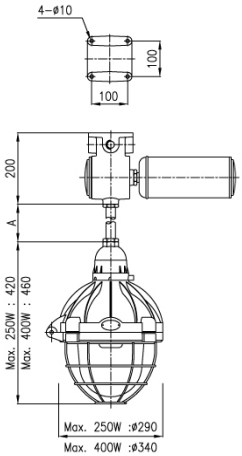

<Pendant Type>

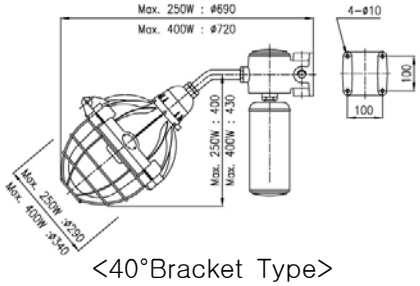

<40°Bracket Type>

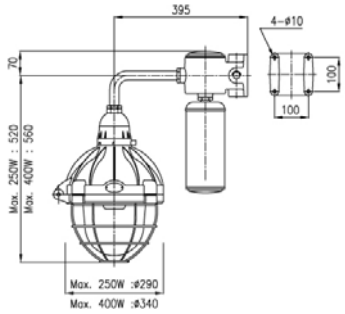

<90°Bracket Type>

❖ Ordering Information

EA NL 2 1 15
① ② ③ ④ ⑤

① EA Lighting Fixture

② Lamp Type
NL - High Pressure Sodium
HL - Metal Halide
ML - Mercury Vapour

③ Model Type
2 - EA Type

④ Mounting Type
1 - Pendant
2 - Ceiling
3 - 90° Bracket
4 - 40° Bracket

⑤ Lamp Wattage(w)
15 - 150
17 - 175
20 - 200
25 - 250
40 - 400

❖ Temperature Performance Data

Lamp Type	Lamp Watt.	Ambient Temp (℃)	Flame Proof "d"
High Pressure Sodium	150	40	T4
		55	T4
	200	40	T4
		55	T4
	250	40	T4
		55	T4
	400	40	T3
		55	T3
Metal Halide	175	40	T4
		55	T4
	250	40	T4
		55	T4
	400	40	T3
		55	T3
Mercury Vapor	200	40	T4
		55	T4
	250	40	T4
		55	T4
	400	40	T3
		55	T3

Copyright by NAMBUK Electric Co., LTD. 2004

❖ Photometric Data

<EAHL 2225>

+Lamp : MH250 (20500 lm)
+With Globe and without Guard

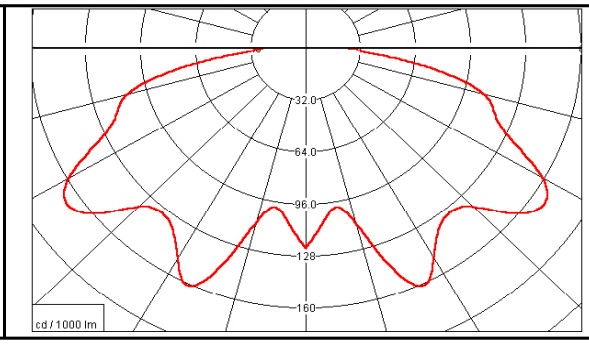

Angle	cd/1000 lm	Angle	cd/1000 lm
0	122	50	161
5	108	55	171
10	94.4	60	164
15	105	65	126
20	143	70	115
25	170	75	112
30	147	80	80.4
35	133	85	38.4
40	129	90	17.4
45	133		

Coefficients of Utilization - Zonal Cavity

Multipliers
(For use with candlepower curves only)

Lamp Watts	Conversion Factor
250	1
175	0.68

%Effective Ceiling Cavity Reflectance(ρcc)	80			70			50			30			10			0
%Wall Reflectance(ρ_w)	50	30	10	50	30	10	50	30	10	50	30	10	50	30	10	0
Room Cavity Ratio RCR	20% Effective Floor Cavity Reflectance															
0	.89	.89	.89	.87	.87	.87	.83	.83	.83	.79	.79	.79	.76	.76	.76	.74
1	.77	.74	.71	.76	.73	.70	.72	.70	.68	.70	.68	.66	.67	.65	.64	.62
2	.67	.62	.58	.66	.61	.57	.63	.59	.56	.61	.57	.54	.58	.56	.53	.52
3	.59	.53	.48	.58	.52	.47	.55	.50	.46	.53	.49	.46	.51	.48	.45	.43
4	.52	.45	.40	.51	.45	.40	.49	.44	.39	.47	.42	.39	.46	.41	.38	.36
5	.46	.39	.34	.45	.39	.34	.44	.38	.34	.42	.37	.33	.41	.36	.33	.31
6	.41	.35	.30	.41	.34	.30	.39	.34	.29	.38	.33	.29	.37	.32	.29	.27
7	.38	.31	.26	.37	.31	.26	.36	.30	.26	.35	.30	.26	.34	.29	.26	.24
8	.34	.28	.23	.34	.28	.23	.33	.27	.23	.32	.27	.23	.31	.26	.23	.21
9	.31	.25	.21	.31	.25	.21	.30	.25	.21	.29	.24	.21	.29	.24	.21	.19
10	.29	.23	.19	.29	.23	.19	.28	.23	.19	.27	.22	.19	.27	.22	.19	.17

<EANL 2225>

+Lamp : NH250 (25000 lm)
+With Globe and without Guard

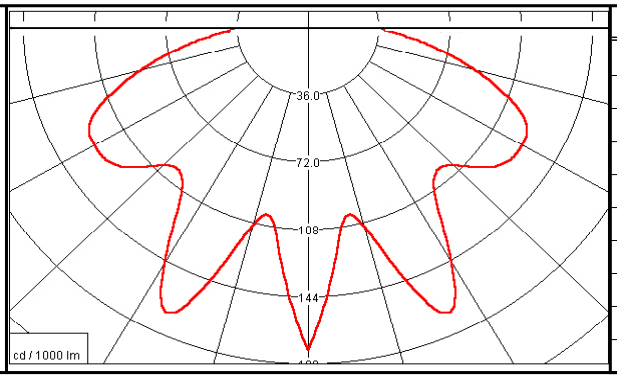

Angle	cd/1000 lm	Angle	cd/1000 lm
0	172	50	118
5	135	55	125
10	94.5	60	125
15	105	65	125
20	142	70	108
25	182	75	87.8
30	142	80	67.5
35	108	85	50.6
40	97.9	90	30.4
45	101		

Coefficients of Utilization - Zonal Cavity

Multipliers
(For use with candlepower curves only)

Lamp Watts	Conversion Factor
250	1
200	0.8
150	0.56

%Effective Ceiling Cavity Reflectance(ρcc)	80			70			50			30			10			0
%Wall Reflectance(ρ_w)	50	30	10	50	30	10	50	30	10	50	30	10	50	30	10	0
Room Cavity Ratio RCR	20% Effective Floor Cavity Reflectance															
0	.89	.89	.89	.87	.87	.87	.83	.83	.83	.79	.79	.79	.76	.76	.76	.74
1	.77	.74	.71	.76	.73	.70	.72	.70	.68	.70	.68	.66	.67	.65	.64	.62
2	.67	.62	.58	.66	.61	.57	.63	.59	.56	.61	.57	.54	.58	.56	.53	.52
3	.59	.53	.48	.58	.52	.47	.55	.50	.46	.53	.49	.46	.51	.48	.45	.43
4	.52	.45	.40	.51	.45	.40	.49	.44	.39	.47	.42	.39	.46	.41	.38	.36
5	.46	.39	.34	.45	.39	.34	.44	.38	.34	.42	.37	.33	.41	.36	.33	.31
6	.41	.35	.30	.41	.34	.30	.39	.34	.29	.38	.33	.29	.37	.32	.29	.27
7	.38	.31	.26	.37	.31	.26	.36	.30	.26	.35	.30	.26	.34	.29	.26	.24
8	.34	.28	.23	.34	.28	.23	.33	.27	.23	.32	.27	.23	.31	.26	.23	.21
9	.31	.25	.21	.31	.25	.21	.30	.25	.21	.29	.24	.21	.29	.24	.21	.19
10	.29	.23	.19	.29	.23	.19	.28	.23	.19	.27	.22	.19	.27	.22	.19	.17

Copyright by NAMBUK Electric Co., LTD. 2004

Compact Fluorescent Lighting Fixtures
EA Series

Wet Locations
Factory Sealed
NEMA 3, 3R, 7



< EACL >

❖ Type of Explosion-proof
Flameproof (Ex d IIC T6)

❖ Standard Materials

- Enclosure : Die casting aluminium alloy
- Globe : Heat resistant hard glass
- Inner Reflector : High purity aluminium
- Guard : Stainless steel

❖ Standard Finish

- MUNSELL No. 7.5BG 6/1.5
- If you want another color, contact us please.

❖ Application

EA Series lighting fixtures are used ;

- in heavy process industries having environments where flammable or explosive vapors or gases, or where combustible dusts are present
- in paint spray booth suitability provides efficient, economical HID lighting for paint spray areas
- in hazardous areas, both indoors and outdoors where long life and low maintenance costs are desired
- in hazardous locations requiring elevated ambient capability
- in marine applications where water spray and corrosive atmospheres are considerations

❖ Features

- Base of the body and the top of the globe holder have accurate tapered cylindrical surfaces and are secured by four socket head captive screw
- Globe assembly is securely hinged to the body
- Lighting unit is screwed onto the top of the mounting box
- Easy installation and maintenance
- Pendant mounting module equipped with integral hub set screws for vibration resistance.
- Hinged assembly allows the fixture to hang free during installation to permit the use of both hands when wiring.
- Can use HID lamps instead of compact fluorescent lamp with external ballast.

❖ Compliance & Certification

- IEC 60079-0, 1
- NEMA 3, 3R, 7
- IP 55
- Certified by KOSHA (Korea Occupational Safety & Health Agency), KGS(Korea Gas Safety Corporation), and the others.

❖ Technical Data

Electrical Rating	
Rated Voltage	AC110V/ 220V/ 240V
Rated Wattage	Compact Fluorescent 45W
Rated Frequency	50Hz/ 60Hz
Entry Size	1/2", 3/4", 1"

❖ Weight

Mounting Type	Catalog No.	Weight
Ceiling	EACL 2204	9.5 kg

⇨ If you need more information, contact us please.

Copyright by NAMBUK Electric Co., LTD. 2004

❖ Dimension

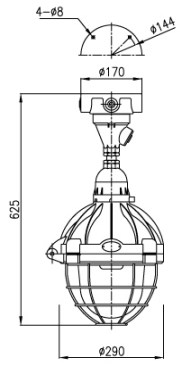

<Ceiling Type>

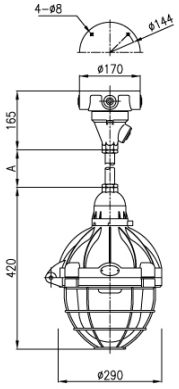

<Pendant Type>

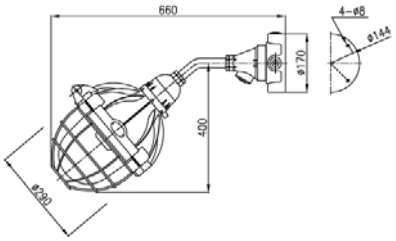

<40°Bracket Type>

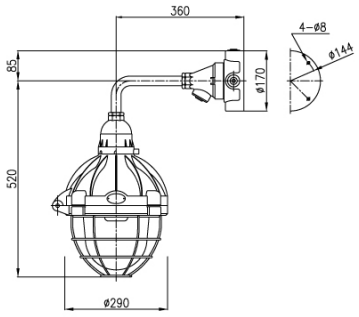

<90°Bracket Type>

❖ Ordering Number

Lamp		Compact Fluorescent	
Watt		45	55
Mounting Type	Pendant	EACL 2104	EACL 2105
	Ceiling	EACL 2204	EACL 2205
	90° Bracket	EACL 2304	EACL 2305
	40° Bracket	EACL 2404	EACL 2405
Certification		Ex d IIC T6	

❖ Ordering Information

EA CL 2 1 04
① ② ③ ④ ⑤

① EA Lighting Fixture

② Lamp Type
CL - Compact Fluorescent

③ Model Type
2 - EA Type

④ Mounting
1 - Pendant
2 - Ceiling
3 - 90° Bracket
4 - 40° Bracket

⑤ Lamp Wattage
04 - 45

❖ Temperature Performance Data

Lamp		Ambient Temp (℃)	Flame Proof "d"
Type	Watt.		
Compact Fluorescent	45	40	85 (T6)
		55	-
	55	40	85 (T6)
		55	-

Copyright by NAMBUK Electric Co., LTD. 2004

❖ Photometric Data

<EACL 2104>

+Lamp : CFL45W (3000 lm)
+With Globe and without Guard

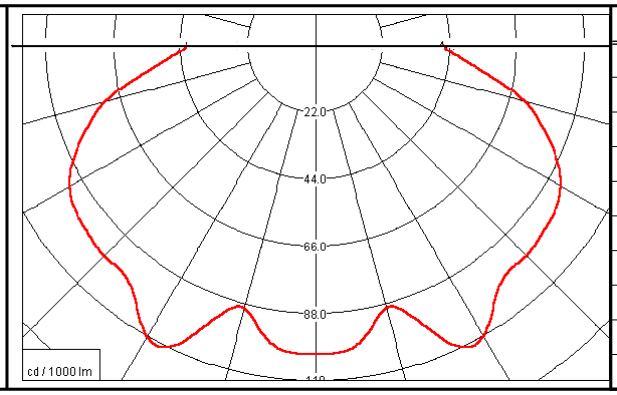

Angle	cd/1000 lm	Angle	cd/1000 lm
0	101	50	95.8
5	101	55	95.8
10	98.6	60	93.2
15	85.1	65	87.6
20	93.2	70	78.3
25	112	75	72.9
30	112	80	56.7
35	101	85	47.3
40	95.8	90	39.2
45	98.6		

Coefficients of Utilization - Zonal Cavity

%Effective Ceiling Cavity Reflectance(ρcc)	80			70			50			30			10			0
%Wall Reflectance(ρ_w)	50	30	10	50	30	10	50	30	10	50	30	10	50	30	10	0
Room Cavity Ratio RCR	20% Effective Floor Cavity Reflectance															
0	.63	.63	.63	.61	.61	.61	.59	.59	.59	.56	.56	.56	.54	.54	.54	.53
1	.54	.52	.50	.53	.51	.49	.51	.49	.47	.49	.47	.46	.47	.46	.44	.43
2	.47	.43	.40	.46	.42	.39	.44	.41	.38	.42	.40	.38	.41	.39	.37	.35
3	.41	.36	.33	.40	.36	.32	.38	.35	.32	.37	.34	.31	.36	.33	.31	.30
4	.36	.31	.28	.35	.31	.27	.34	.30	.27	.33	.29	.27	.32	.29	.26	.25
5	.32	.27	.24	.32	.27	.24	.30	.26	.23	.29	.26	.23	.28	.25	.23	.22
6	.29	.24	.21	.29	.24	.21	.28	.23	.20	.27	.23	.20	.26	.23	.20	.19
7	.26	.22	.18	.26	.21	.18	.25	.21	.18	.24	.21	.18	.24	.20	.18	.17
8	.24	.20	.16	.24	.19	.16	.23	.19	.16	.22	.19	.16	.22	.18	.16	.15
9	.22	.18	.15	.22	.18	.15	.21	.17	.15	.21	.17	.15	.20	.17	.15	.14
10	.21	.16	.14	.20	.16	.14	.20	.16	.13	.19	.16	.13	.19	.16	.13	.12

Copyright by NAMBUK Electric Co., LTD. 2004