MMV

Mechanical Machine Quick Vise



- 3-step mechanical machine quick vise

MACHINE VISE

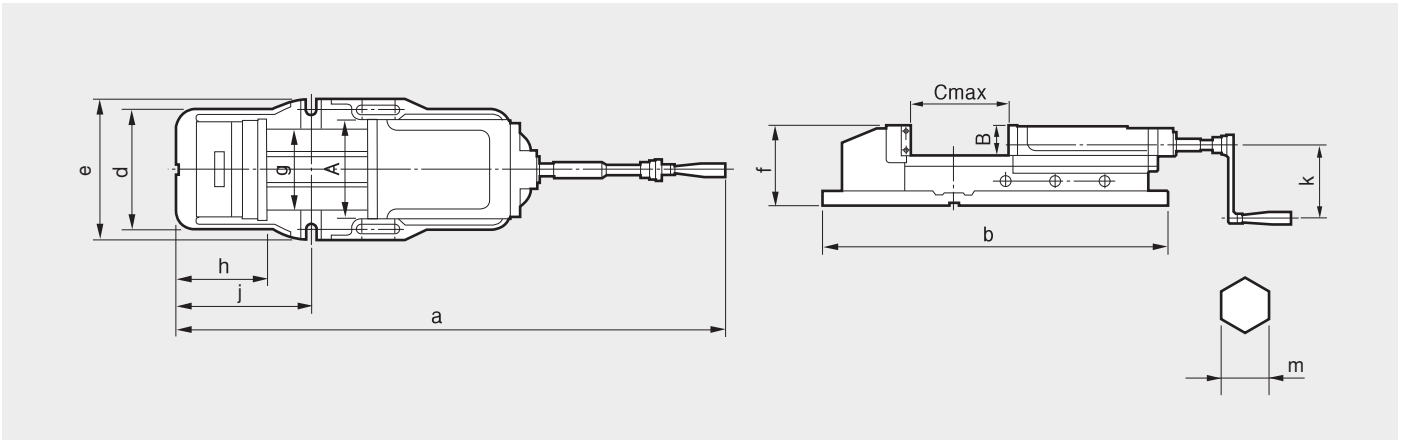

Dimensions

	A	B	C	a	b	d	e	f	g	h	j	k	m
MMV-150Q(6")	150	51	300	800	620	200	240	133	116	125	210	130	19
MMV-200Q(8")	200	62	300	900	700	240	280	162	160	165	266	130	19

Specifications

Type	Max. Opening	Max. Grip Torque	Weight [kgf]		Operating Swivel Base	Mounting Key Size
	[mm]	[kg]	Body	Table	[mm]	[mm]
MMV-150Q(6")	300	4,400	56.0	16.0	VS-175T	34x16x10
MMV-200Q(8")	300	6,500	94.0	23.0	VS-200T	36x20x12

※ Specifications are subject to change without notice.