유량계전문제조업체
www.fckoreains.com

Electro-Magnetic
FLOWMETER



FC KOREA

FC KOREA

ELECTRO-MAGNETIC FLOW METER

Contents

Principle of Operation 04
Grounding Method 05~07
Piping Installation 08

CN-100 Flanged Combined Type 09~17

CN-400 Battery Type 19~22

CNT-2 Flanged Separate Type 23~29

CNW-1 / CNW-2 Wafer Type 31~44

Appendix

Easy Manual for Converter 45~47
Flange Dimension 49~53



1. Principle of Electromagnetic Flowmeter

1-1. Principle of Operation

The electromagnetic flowmeters are the ideal flowmeters for metering the flow of all liquids, slurries and sludges that have a specific minimum electrical conductivity. These flowmeters measure accurately, create no additional pressure drop, contain no moving or protruding parts, are wear free and corrosion resistant. Installations are possible in any existing piping system.

The electromagnetic flowmeter has proven itself over many decades and is the preferred flowmeter in the Chemical, Pharmaceutical and Cosmetic industries, Municipal Water and Waste Water treatment facilities and in the Food and Paper industries.

1-2. Measurement Principle

Faraday's Laws of induction form the basis form the basis for the electromagnetic flowmeter which states that a voltage is generated in a conductor as it moves through a magnetic field.
This principle is applied to a conductive fluid which flows through the meter tube perpendicular to the direction of the magnetic field. (see the figure 1.)

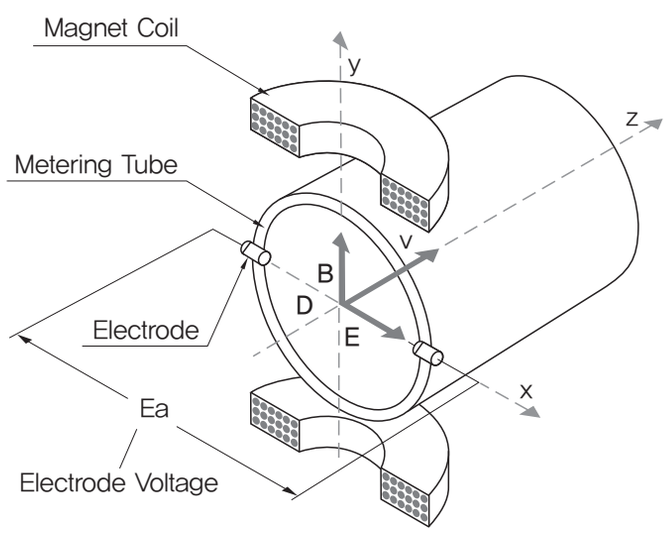

E = Electrode Voltage
B = Magnetic Induction
D = Electrode Distance
V = Average Flow Velocity
qv = Volume Flowrate

$$Ea \sim B \cdot D \cdot v$$

$$qv = \frac{D^2\pi}{4} \cdot v$$

$$Ea \sim qv$$

Figure 1. Basic operating principle of an Electromagnetic Flowmeter

The voltage induced in the fluid is measured by two electrodes located diametrically opposite to each other. This electrode voltage **Ea** is proportional to the magnetic induction **B**, the electrode distance **D** and the average flow velocity **v**. Nothing that the magnetic induction **B** and the electrode distance **D** are constant values indicates that a proportionality exists between the electrode voltage **Ea** and the average flow velocity **v**. From the equation for calculating the volume flowrate **Ea~qv**, it follows that the signal voltage is linear and proportional to the volumetric flowrate.

2. Grounding

2–1. General information on ground connections

Observe the following items when grounding the device;

– The flowmeter grounding is one of the most important things for flowmeter installation.
– For plastic pipes or pipes with insulating lining, the grounding is provided by the grounding ring.
– When stray potentials are present, install a grounding ring upstream and downstream of the flowmeter sensor.
– For measurement–related reasons, the potential in the station ground and in the pipeline should be identical.

※ Important–Notice
If the flowmeter sensor is installed in plastic or earthenware pipelines, or in pipelines with an insulating lining, transient current may flow through the grounding electrode in special cases.
In the long term, it may destroy the sensor, since the ground electrode will turn in degrade electrochemically.
In these special cases, the connection to the ground must be performed using grounding plates.
Install a grounding ring upstream and downstream of the device in this case.

2–2. Metal pipe with fixed flanges

Use a copper wire (at least 2.5mm²) to establish the ground connection between the sensor, the pipeline flanges and an appropriate grounding point.

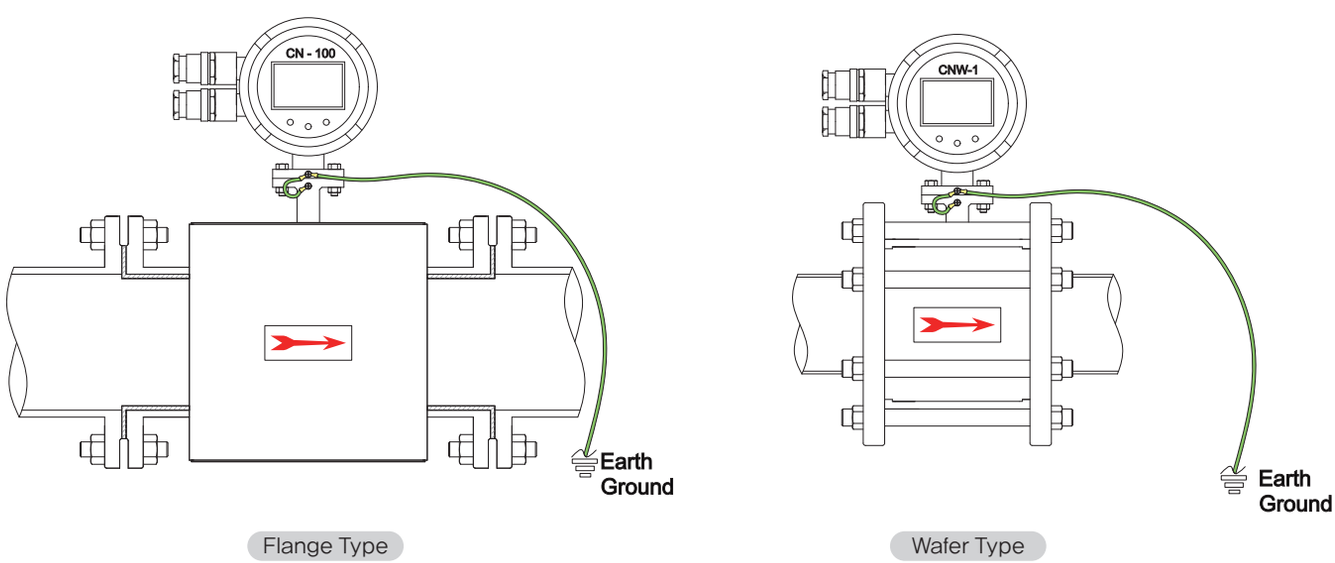

Figure 2. : Metal pipe, without liner (over 50A sizes)

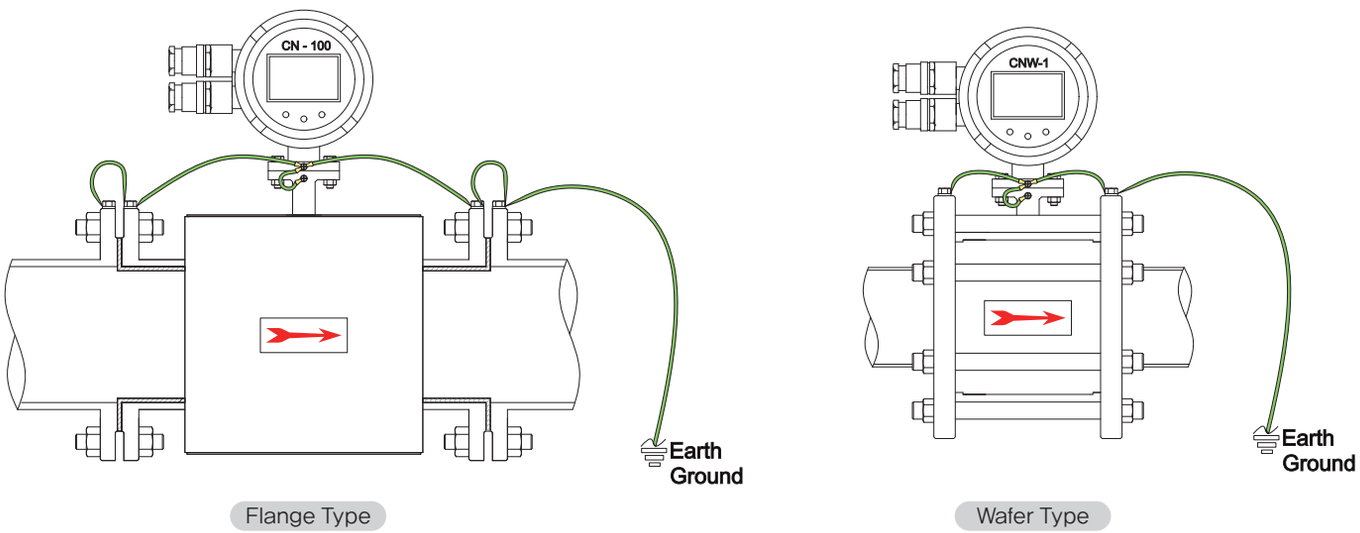

Figure 3. : Metal pipe, without liner (from 10A to 40A sizes)

2-3. Plastic pipes, non-metallic pipes or pipes with insulating liner

For plastic pipes or pipes with insulating lining, the ground for the measuring agent is provided by the grounding ring. If grounding electrodes are used, the grounding ring is not necessary.

a) Install the flowmeter sensor with grounding ring in the pipeline.
b) Connect the terminal lug for the grounding ring and grounding connection on the flowmeter sensor with the grounding strap.
c) Use a copper wire (min. 2.5mm^2) to link the ground connection to a suitable grounding point.

※ It is essential to use this grounding method in an electrolysis process at a plating factory.

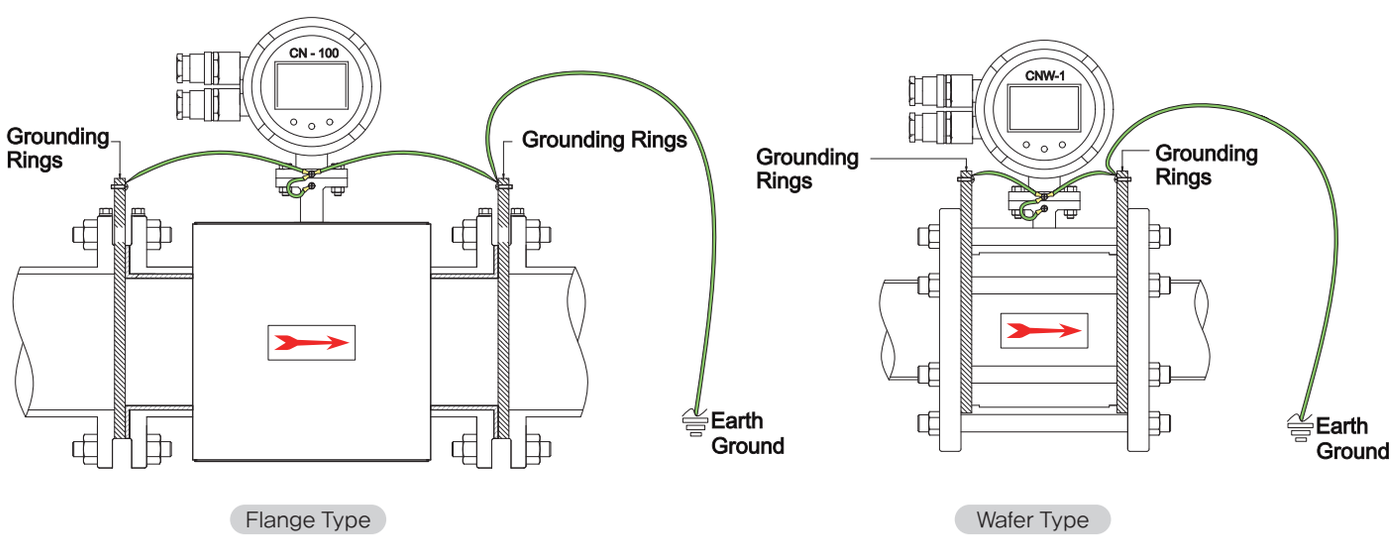

Figure 4. : Plastic pipes, non-metallic pipes or pipes with insulating liner

2–3. Ground for pipes with flexible connection

For pipes with flexible connection, it should be welded M16 or 1/4 sized bolts on both sides of the pipes as shown the figure 5 to get proper ground results.
Make sure to use a copper wire (min. 2.5mm²) to link the ground connection to a suitable grounding point.

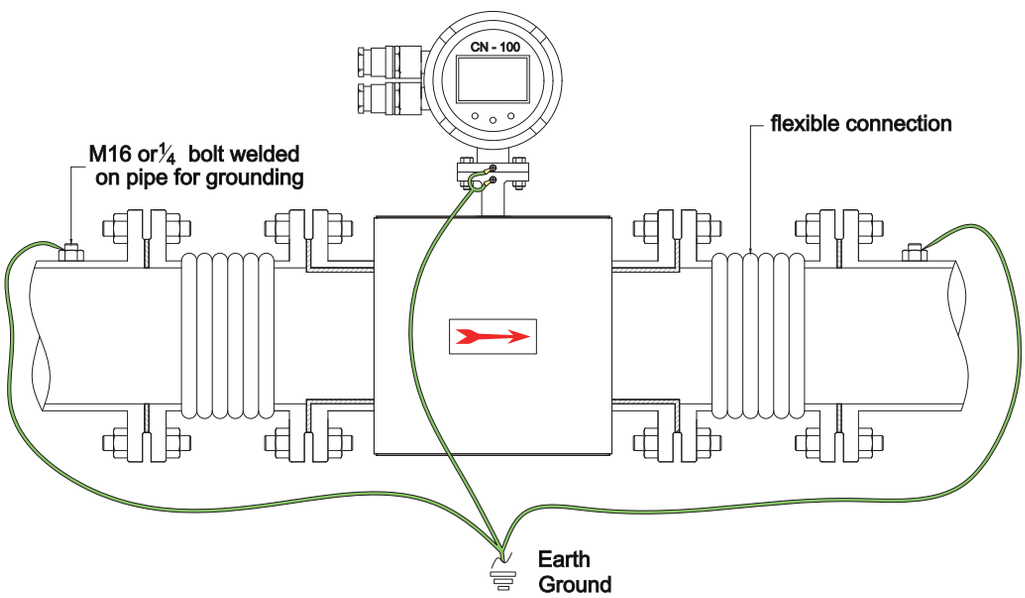

Flange Type

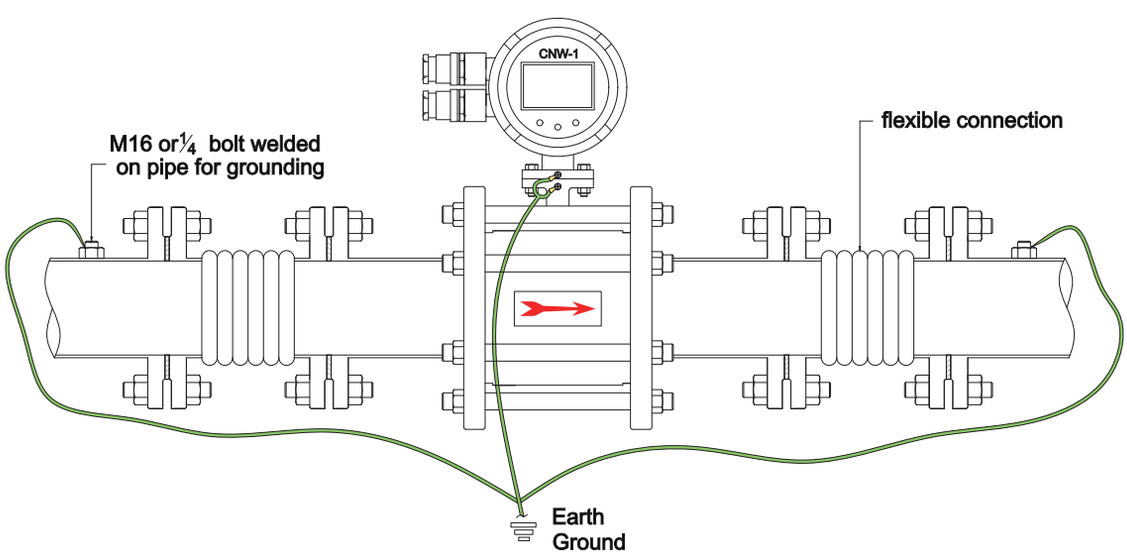

Wafer Type

Figure 5. : Ground for pipes with flexible connection

3. Piping Installation

3-1. Upstream Downstream Piping Installation Methods (Standard)

To ensure specific accuracy over widely varying process conditions, install the flowtube with a minimum of five straight upstream and two pipe diameters downstream from the electrode plane, as shown below. This flowtube placement is usually adequate to allow for disturbances created by elbows, valves and reducers.

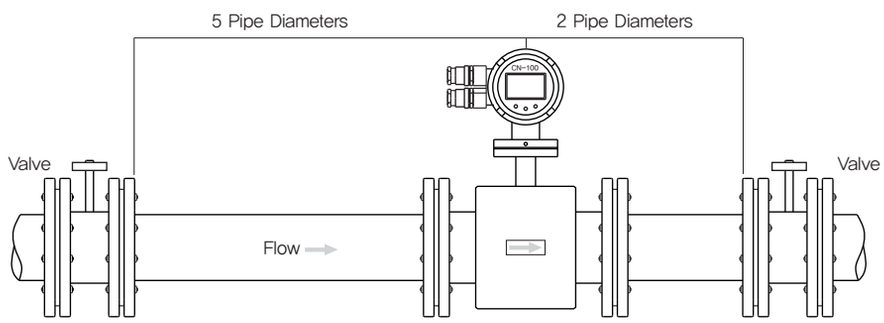

Upstream and Downstream Straight Pipe Diameter

※ NOTE : It can be measured a correct flowrate only when a detector is full with fluid inside completely.
Make sure to operate it with fluid in full inside.

3-2. Required Pipe Length on Piping Connections

If various joints are used upstream of the detector outlet, the straight pipe length as show in figure below is required.

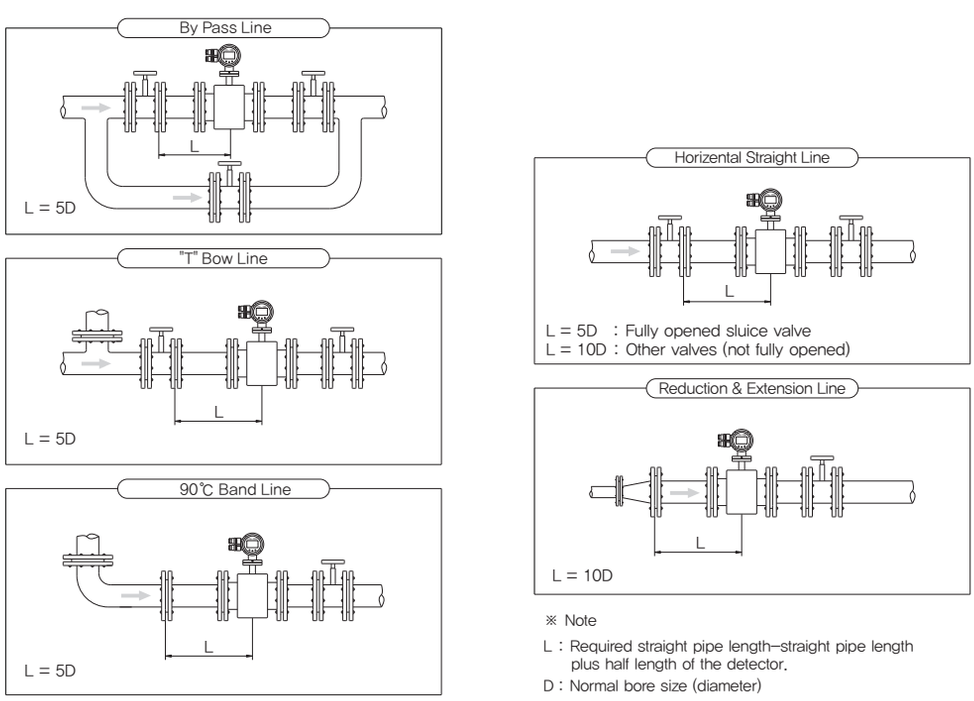

※ Note
L : Required straight pipe length-straight pipe length plus half length of the detector.
D : Normal bore size (diameter)

The figure above required straight pipe length on the upstream side

It follows the regulations of JIS B 7554 and KS B 0612 standards for the straight-pipe length installation conditions of electromagnetic flowmeter.

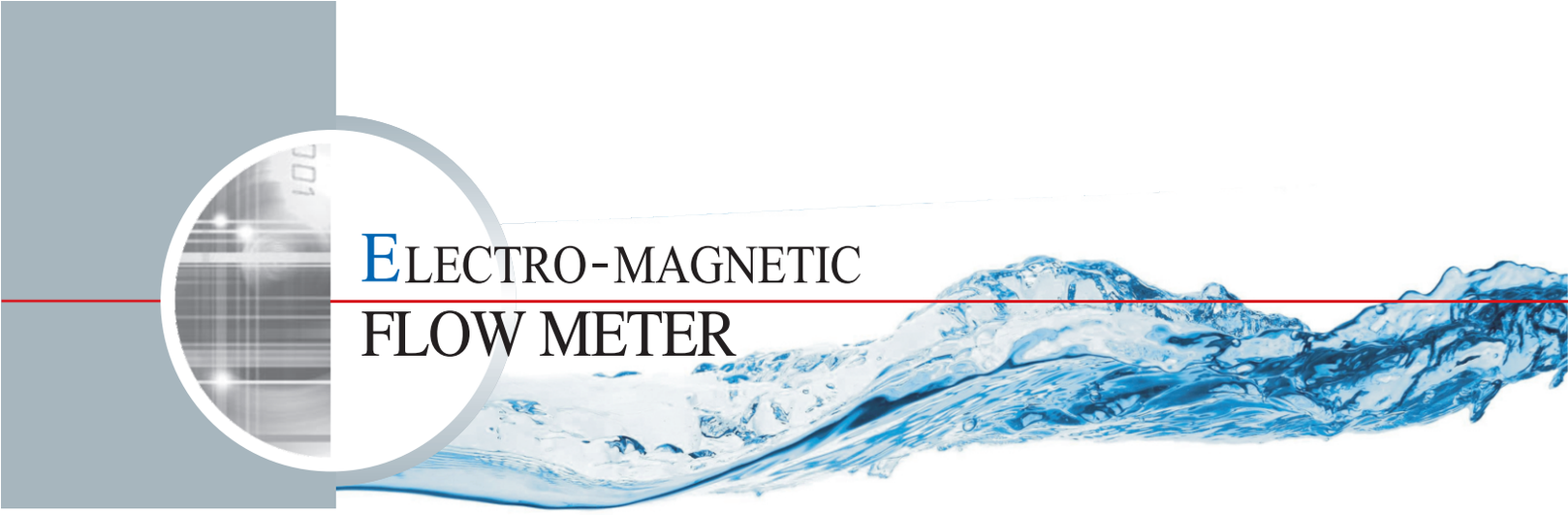

ELECTRO-MAGNETIC
FLOW METER

ELECTRO-MAGNETIC FLOW METER

CN-100

Flanged Combined Type

FC KOREA

www.fckoreains.com

1. Summary

The Electromagnetic Flowmeter can be used to accurately measure the flowrate of liquids, paper pulp, slurry and mineral slurry which has an electrical conductivity greater than 20㎲/cm. CN-100 is a flow measurement system in a compact design which integrates the primary and signal converter.

MODEL	CN-100
TYPE	COMBINED TYPE

Normal Type



EX-Proof Type



Option



Assembly Way

Combined Type (CN-100)

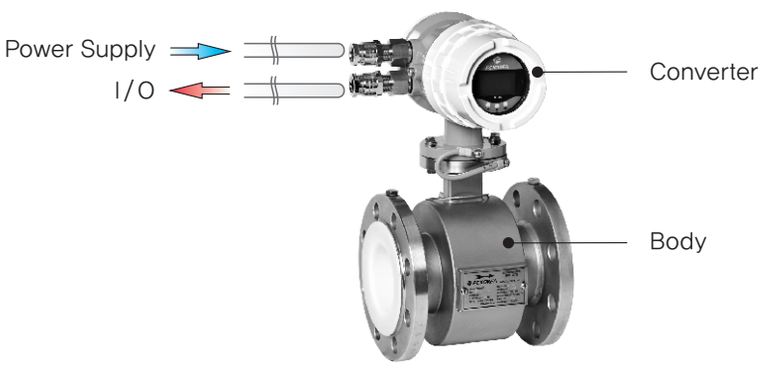



2. Specifications

MODEL	CN-100
Type	Combined Type
Size	10mm (3/8") ~ 1,000mm (39")
Process connection	Flange type-standard KS/JIS10K RF (Option: ANSI, DIN)
Measuring range	0.2m/s-10m/s
Accuracy	±0.5% F.S. (15A~800A) ±1.0% F.S.(900A ~ : It needs for site calibration)
Fluid temperature	Teflon (-10℃~160℃) Hard rubber (0℃~60℃)
Ambient temperature	-10℃~60℃
Conductivity	≥10㎲/cm (Option: ≥5~10㎲/cm)
Power supply	AC 85-250V (50~60Hz) DC 24V, Surge Arrester
Power consumption	Max 15VA
Display	LCD Display Flowrate: 5-digit Display Total: 9-digit Display With Back light
Output	Analog: 4-20mA (isolated) Pulse: Open Collector Digital: RS485
Protection class	IP66 Ex-proof: KC, IECEx (Option) - Exd II C T5 (IP66)
Special feature	① Self check ② Empty pipe ③ Enable to reverse flow direction ④ Data logging ⑤ Error message

3. Standard Material

No.	Description	Material
		10A ~ 1,000A
①	Head	Cast Aluminum
②	Body	SUS304
③	Flange	SUS304 / Carbon Steel
④	Liner	Teflon (PTFE) / Hard Rubber
⑤	Electrode	Hastelloy-C Option : Platinum Titanium Tantalum

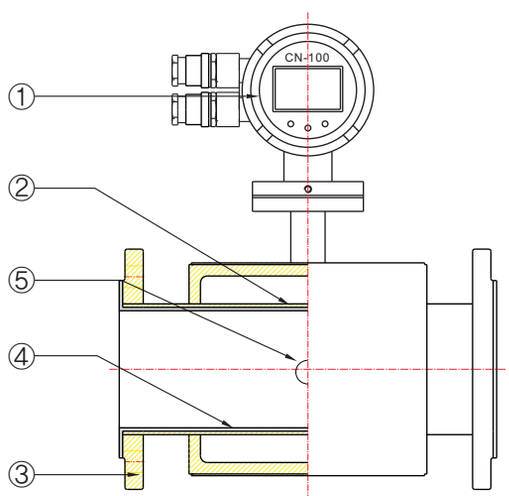

FC KOREA Co., LTD. Address: #173-409, Gajwa-Dong, Seo-Gu, Incheon, Korea 404-811
Tel : +82-32-876-7339 / Fax : +82-32-876-7377 http://www.fckoreains.com

4. Measuring Range

In the normal industry application, it is better to set the measured medium speed as 2~4m/s, under the special situation, the minimum speed should be more than 0.2m/s and maximum speed less than 8m/s, if there are solid granules in liquid, the usual speed should be less than 3m/s for purpose to avoid the over-attrition between lining and electrical poles. For viscid liquid, the speed can choose as 2m/s, the fast flow speed makes for the automatic elimination of obstructive substances glued on poles, therefore improve the inspection's preciseness.

Size (mm)	Flow range			
	Minimum		Maximum	
	Velocity (m/s)	Flow rate (m^3/h)	Velocity (m/s)	Flow rate (m^3/h)
10A		0.08		2.82
15A		0.19		6.35
20A		0.34		11.29
25A		0.53		17.64
32A		0.87		28.91
40A		1.36		45.71
50A		2.12		70.58
65A		3.58		119.28
80A		5.43		180.68
100A		8.48		282.32
125A		13.25		441.12
150A		19.08		636.21
200A		33.91		1129.27
250A		52.99		1764.48
300A	0.2	76.30	10.0	2540.86
350A		103.86		3458.39
400A		135.65		4517.08
450A		171.68		5716.93
500A		211.95		7057.94
600A		305.21		10163.43
700A		415.42		13833.55
800A		542.59		18068.31
900A		686.72		22867.71
1000A		847.80		28231.74
1200A		1220.83		40653.71
1400A		1661.69		55334.21
1600A		2170.37		72273.25
1800A		2746.87		91470.84
2000A		3391.20		112926.96

Graph Illustration of Diameter, Flow Speed and Volume of Flowmeter

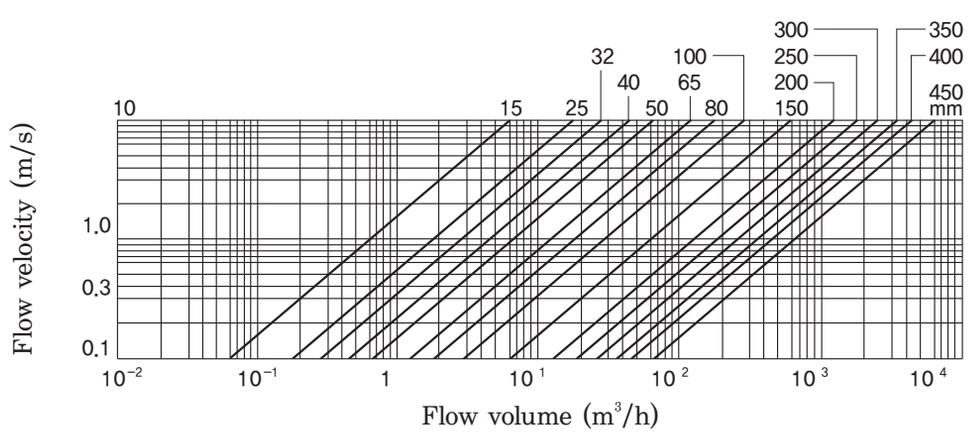

5. CN-100 External Dimension For Integration

[KS / JIS10K]

Size (mm)	Working Pressure (Bar)	L (mm)	D (mm)	K (mm)	H (mm)	n-ØA	Integration Weight(Kg)
10		200	90	65	300	4-Ø15	6
15		200	95	70	300	4-Ø15	7
20		200	100	75	310	4-Ø15	7
25		200	125	90	310	4-Ø19	8
32	40	200	135	100	320	4-Ø19	8
40		200	140	105	330	4-Ø19	9
50		200	155	120	350	4-Ø19	10
65		200	175	140	360	8-Ø19	11
80		200	185	150	380	8-Ø19	13
100		250	210	175	400	8-Ø19	17
125	16	250	250	210	440	8-Ø23	20
150		300	280	240	460	8-Ø23	30
200		350	330	290	510	12-Ø23	41
250		400	400	355	570	12-Ø25	58
300		500	445	400	630	12-Ø25	70
350		500	490	445	680	16-Ø25	82
400		600	560	510	730	16-Ø27	106
450	10	600	620	565	780	20-Ø27	116
500		600	675	620	850	20-Ø27	130
600		600	745	730	950	24-Ø33	185
700		700	905	840	1080	24-Ø33	230
800		800	1020	950	1170	24-Ø33	300
900		900	1120	1050	1210	28-Ø33	380
1000	6	1000	1235	1160	1320	20-Ø39	480

※ H(mm) : Allowance ±10mm

Integration installation type

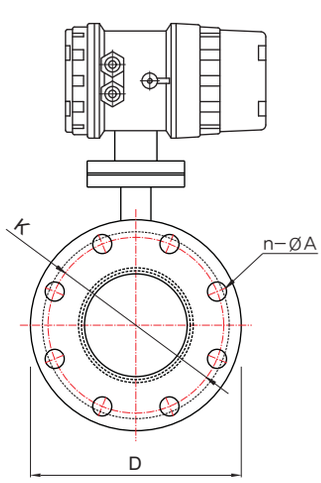

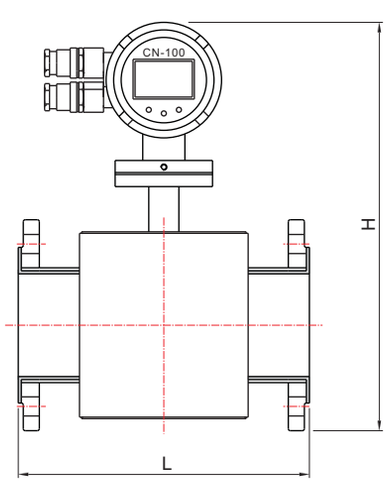

FC KOREA Co., LTD. Address: #173-409, Gajwa-Dong, Seo-Gu, Incheon, Korea 404-811
Tel : +82-32-876-7339 / Fax : +82-32-876-7377 http://www.fckoreains.com

6. Ordering Code

MODEL	SPECIFICATION	DESCRIPTION
CN–100		COMBINED TYPE
	METER SIZE	
	1	10A (3/8")
	2	15A (1/2")
	3	20A (3/4")
	4	25A (1")
	5	32A (1–1/4")
	6	40A (1–1/2")
	7	50A (2")
	8	65A (2–1/2")
	9	80A (3")
	10	100A (4")
	11	125A (5")
	12	150A (6")
	13	200A (8")
	14	250A (10")
	15	300A (12")
	16	350A (14")
	17	400A (16")
	18	450A (18")
	19	500A (20")
	20	550A (22")
	21	600A (24")
	22	650A
	23	700A
	24	750A
	25	800A
	26	900A
	27	1000A
	CONNECTION FLANGE STANDARD	
	A	JIS 10K
	B	JIS 16K
	C	JIS 20K
	D	ANSI 150#
	E	ANSI 300#
	F	DIN PN10
	G	DIN PN16
	H	Other
	ELECTRODE MATERIAL	
	A	316LSS
	B	Ti (titanium)
	C	Pt–Ir (platinum iridium)
	D	Ta (tantalum)
	E	Hastelloy C
	F	Other
	GROUND RING MATERIAL	
	A	316SS
	B	316LSS
	C	Ti (titanium)
	D	Ta (tantalum)
	E	Pt–Ir (platinum iridium)
	F	Hastelloy C
	N	None
	LINER MATERIAL	
	A	PTFE
	B	HARD RUBBER
	C	Other

[Example]

CN–100–7–A–E–A–A

Model

7. Dimension Size

7-1. Normal Combined Type

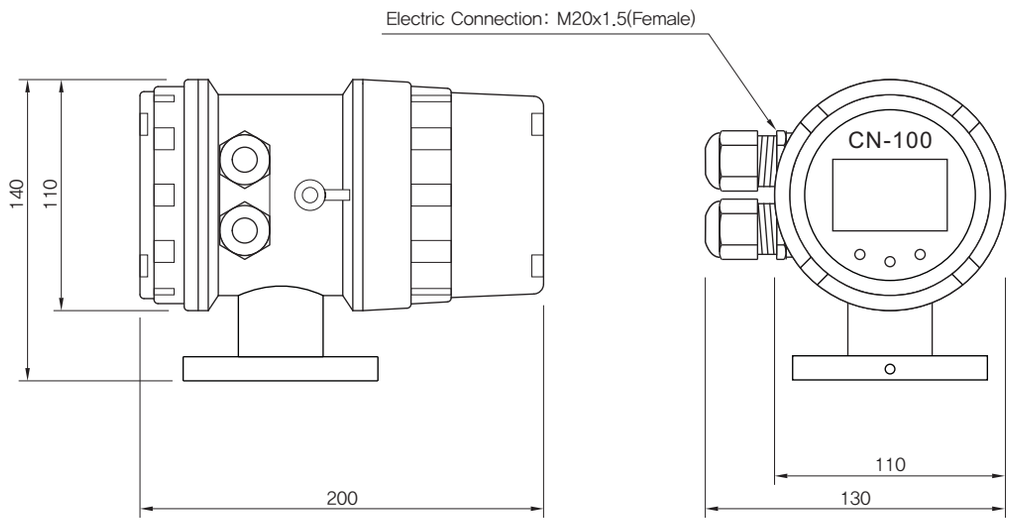

7-2. Ex-Proof Combined Type

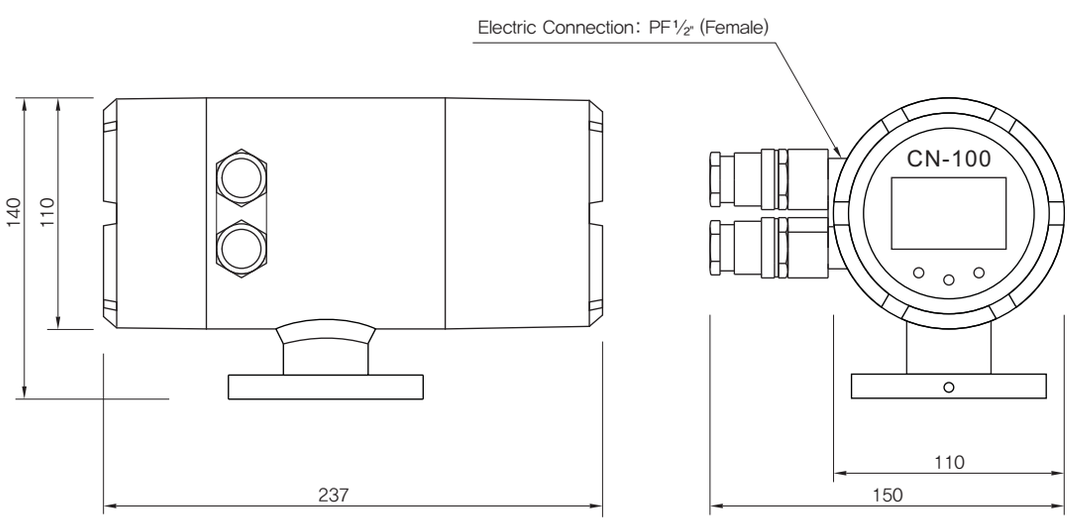

8. Wiring

8-1. Wiring Connection on Converter

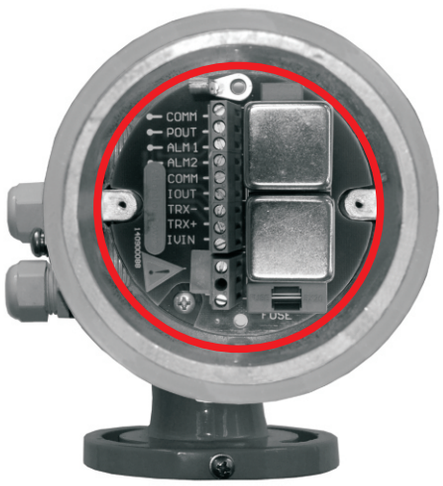

Description for PCB connection functions	
COMM	Frequency and Pulse
POUT	Frequency (Pulse) Output for Bi-directional Flow
ALM1	Alarm Output for Upper Limit
ALM2	Alarm Output for Low Limit
COMM	Current and Alarm Com
IOUT	Current Output of Flux (Two Routes Out) Isolated
TRX+	+ Communication Signal Input
TRX-	- Communication Signal Input
IVIN	External DC Power 24V
LN-	Power Supply
LN+	Power Supply

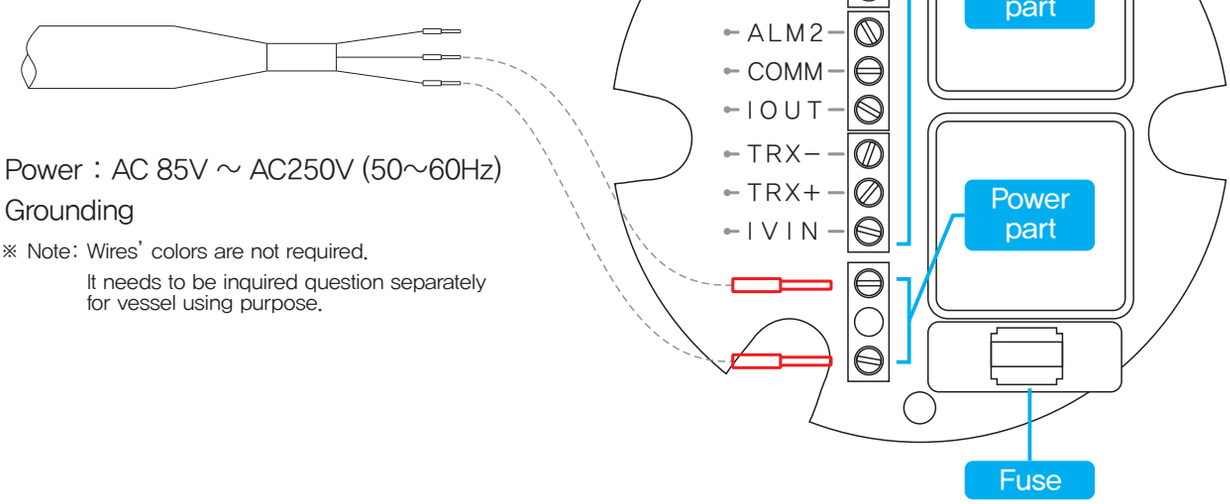

1) Power : AC 85V ~ AC250V (50~60Hz)
2) Grounding

※ Note: Wires' colors are not required.
It needs to be inquired question separately for vessel using purpose.

8-2. Controller Wiring Diagram

1) Power : AC 85V ~ AC250V (50~60Hz)
2) Analog Output : DC 4~20mA (Isolated)
3) Pulse Output : Open Collector Pulses
4) Alarm Output : HI & LOW Alarm Output
5) Network Function : RS-485
6) Grounding
7) Surge Arrester

8-3. Controller Wiring Connection Function

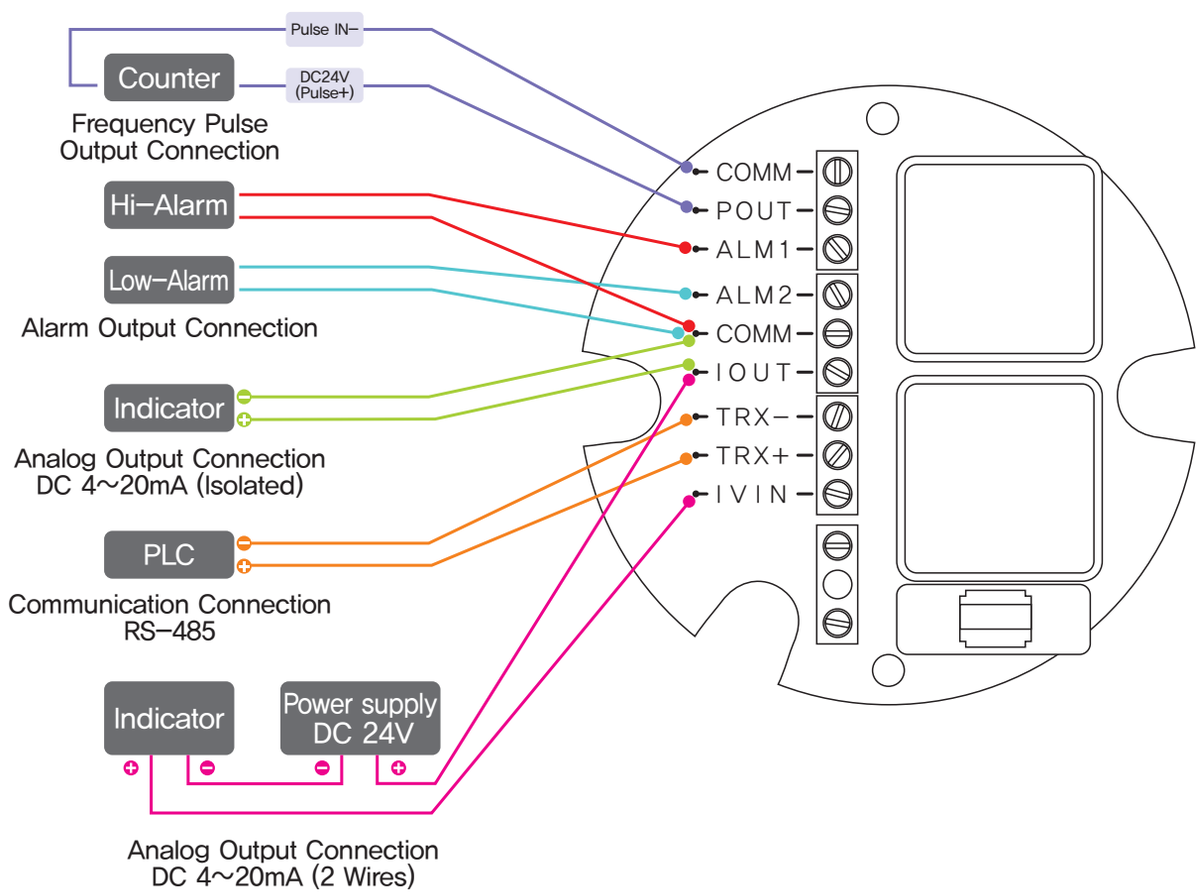

FC KOREA Co., LTD. Address: #173-409, Gajwa-Dong, Seo-Gu, Incheon, Korea 404-811
Tel : +82-32-876-7339 / Fax : +82-32-876-7377 http://www.fckoreains.com