BRUSHLESS DC MOTOR UNIT - F Series

DIMENSIONS

K10FH200NC + K10H□BTH
K10FH400NC + K10H□BTH
(Weight : 7.3Kg)



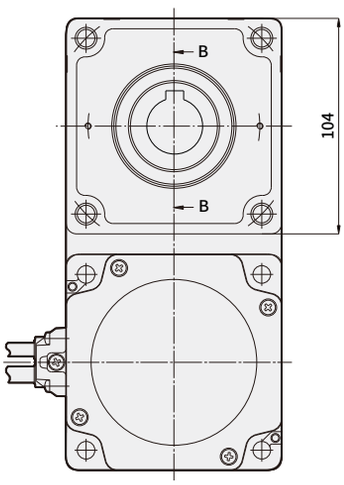

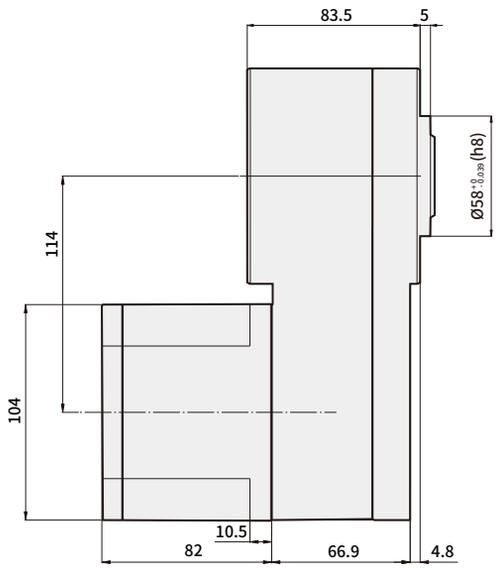

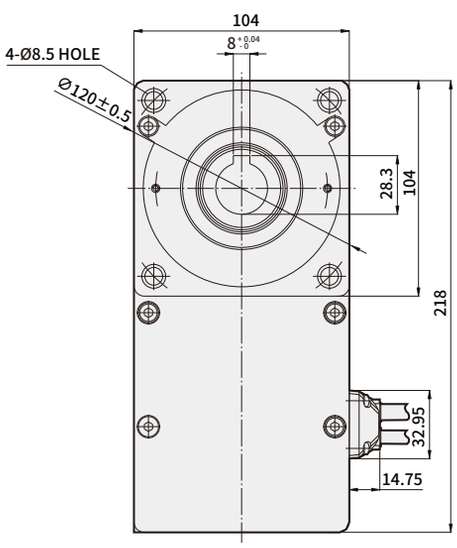

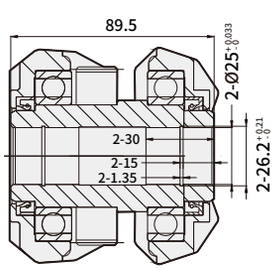

SECTION B-B

*KEY (ACCESSORY)

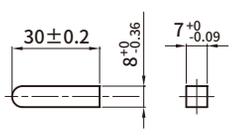

MOTOR PRODUCT NAME	GEARHEAD PRODUCT NAME	DECELERATION RATIO	FIXING BOLT
K10FH200NC K10FH400NC	K10H□BTH	5, 10, 15, 20 30, 50, 100	M8 P1.25×100

* In Dimension, in ■ of name represents power voltage U(single-phase 100~115V), C(single-phase 200~230V)
* In □ of name, it represents a deceleration ratio.
* Mounting bolt sets are included in flat type gearbox.
  M8×100L (flat washer, spring washer, hexagonal nut 4pcs each)

Delivery effciency of gearhead

Product name	Deceleration ratio	5	10	15	20	30	50	100	200
	K6H□B	90%				86%			81%
	K8H□B	90%				86%			81%
	K9H□B	90%				86%			81%
	K10H□BU	90%				86%		81%	
	K6H□BTH	80%	85%						
	K8H□BTH	85%							
	K9H□BTH	85%							
	K10H□BTH	85%							

Allowed torque of combination type

Unit = N·m

Product name	Deceleration ratio	5	10	15	20	30	50	100	200
	Speed control range [r/min]	20~600	10~300	6.7~200	5~150	3.3~100	2~60	1~30	0.5~15
K6BH30N■ + K6H□B	100~3000	0.45	0.9	1.4	1.8	2.6	4.3	6	6
K8BH60N■ + K8H□B		0.9	1.8	2.7	3.6	5.2	8.6	16	16
K9BH90N■ + K9H□B		1.35	2.7	4.1	5.4	7.7	12.9	25.8	48.6
K9BH150NC + K9H□B		2.2	4.4	6.6	8.8	12.6	21.1	30	30
K6BH30N■ + K6H□BTH		0.4	0.85	1.3	1.7	2.6	4.3	8.5	17
K8BH60N■ + K8H□BTH		0.85	1.7	2.6	3.4	5.1	8.5	17	34
K9BH90N■ + K9H□BTH		1.9	3.8	5.7	7.7	11.5	19.1	38.3	68
K9BH150NC + K9H□BTH		2.1	4.2	6.2	8.3	12.5	21	42	68
Product name	Deceleration ratio	5	10	15	20	30	50	100	200
	Speed control range [r/min]	20~800	10~400	6.7~266	5~200	3.3~133	2~80	1~40	0.5~20
K6FH30NC+K6H□B	100~3000	0.45	0.9	1.4	1.8	2.6	4.3	6	6
	4000	0.36	0.72	1.08	1.4	2.1	3.4	5.4	5.4
K8FH60NC+K8H□B	100~3000	0.9	1.8	2.7	3.6	5.2	8.6	16	16
	4000	0.68	1.4	2.0	2.7	3.9	6.5	12.9	14
K9FH150NC+K9H□B	100~3000	2.2	4.4	6.6	8.8	12.6	21.1	30	30
	4000	1.4	2.7	4.1	5.4	7.7	12.9	25.8	27
K10FH200NC+K10H□BU	100~3000	2.9	5.9	8.8	11.7	16.8	28	52.7	70
	4000	2	4.1	6.1	8.1	11.6	19.4	36.5	63
K10FH400NC+K10H□BU	100~3000	5.9	11.7	17.6	23.4	33.5	55.9	70	70
	4000	4.3	8.6	12.8	17.1	24.5	40.9	63	63
K6FH30NC+K6H□BTH	100~3000	0.4	0.85	1.3	1.7	2.6	4.3	8.5	17
	4000	0.30	0.64	0.96	1.3	1.9	3.2	6.4	12.8
K8FH60NC+K8H□BTH	100~3000	0.85	1.7	2.6	3.4	5.1	8.5	17	34
	4000	0.64	1.3	1.9	2.6	3.8	6.4	12.8	25.5
K9FH150NC+K9H□BTH	100~3000	2.1	4.2	6.2	8.3	12.5	21	42	68
	4000	1.3	2.6	3.8	5.1	7.7	12.8	25.5	51
K10FH200NC+K10H□BTH	100~3000	2.8	5.5	8.3	11.1	16.6	27.6	55.3	—
	4000	1.9	3.8	5.7	7.7	11.5	19.1	38.3	—
K10FH400NC+K10H□BTH	100~3000	5.5	11.1	16.6	22.1	33.2	55.3	110	—
	4000	4.0	8.1	12.1	16.2	24.2	40.4	80.8	—

* In dimension, in ■ of name represents power voltage U(single-phase 100~115V), and C(single-phase 200~230V)
* Rotation direction shows the same ☐ color as the motor. In other cases, it's the opposite.
* Flat Gearbox viewed from front side is opposite rotation direction with motor.
* Flat Gearbox viewed from back side is same rotation direction with motor.

→ Allowed overhang load and allowed thrust

Product name		Deceleration ratio	Allowed overhand load				Allowed thrust load	
			From the end of output part 10mm		From the end of output part 20mm			
			N	kgf	N	kgf	N	kgf
GEARED MOTOR	K6BH30N■ (K6FH30NC) + K6H□B	5	100	10	150	15	40	4
		10,15,20	150	15	200	20		
		30,50,100,200	200	20	300	30		
	K8BH60N■ (K8FH60NC) + K8H□B	5	200	20	250	25	100	10
		10,15,20	300	30	350	35		
		30,50,100,200	450	45	550	55		
	K9BH90N■ K9BH150NC (K9FH150NC) + K9H□B	5	300	30	400	40	150	15
		10,15,20	400	40	500	50		
		30,50,100,200	500	50	650	65		
	K10FH200NC (K10FH400NC) + K10H□BU	5,10,15,20	550	55	800	80	200	20
		30,50	1000	100	1250	125	300	30
		100,200	1400	140	1700	170	400	40
	K6BH30N■ (K6FH30NC) + K6H□BTH	5,10	450	45	370	37	200	20
		15~200	500	50	400	40		
	K8BH60N■ (K8FH60NC) + K8H□BTH	5,10	800	80	660	66	400	40
		15~200	1200	120	1000	100		
	K9BH90N■ K9BH150NC (K9FH150NC) + K9H□BTH	5,10	900	90	770	77	500	50
		15,20	1300	130	1110	111		
		30,50,100,200	1500	150	1280	128		
	K10FH200NC (K10FH400NC) + K10H□BTH	5,10	1230	123	1070	107	800	80
		15,20	1680	168	1470	147		
		30,50,100	2040	204	1780	178		
MOTOR	K6BS30N■,K6FS30NC		70	7	100	10	· Do not apply THRUST load Please. If you can't help it, 50% or less.	
	K8BS60N■,K8FS60NC		120	12	140	14		
	K9BS90N■ K9BS150NC,K9FS150NC		160	16	170	17		
	K10FS200NC,K10FS400NC		197	19.7	220	22		

* In dimension, in ■ of name represents power voltage U(single-phase 100~115V),and C(single-phase 200~230V).
* In □ of name, it represents a deceleration ratio.
* Permissible overhang load can be withdrawn by calculation.

Rotation speed - torque characteristic

K6BS30N■ / K6BH30N■

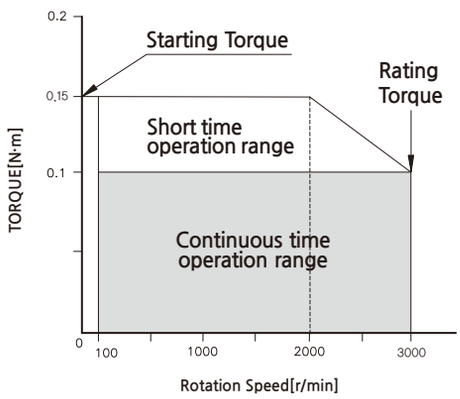

K8BS60N■ / K8BH60N■

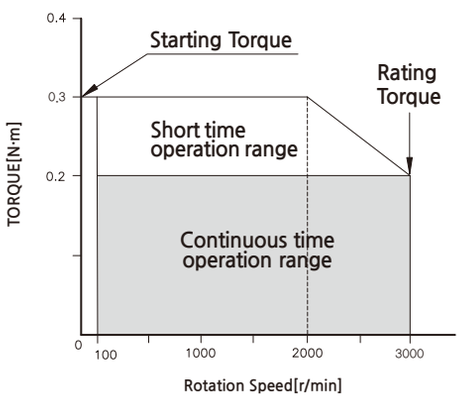

K9BS90N■ / K9BH90N■

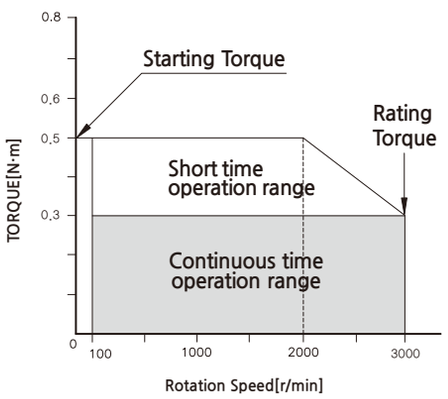

K9BS150NC / K9BH150NC

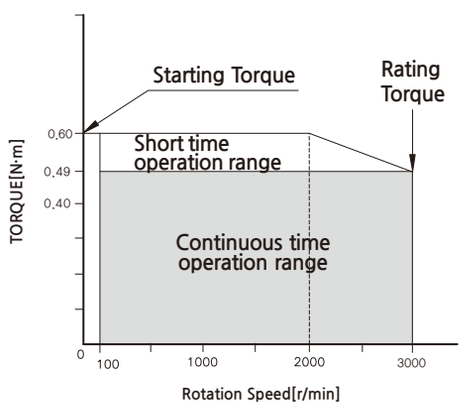

K6FS30NC / K6FH30NC

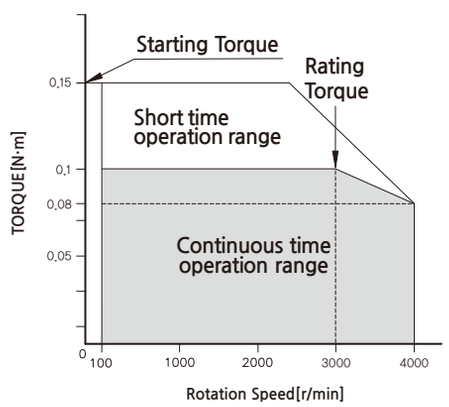

K8FS60NC / K8FH60NC

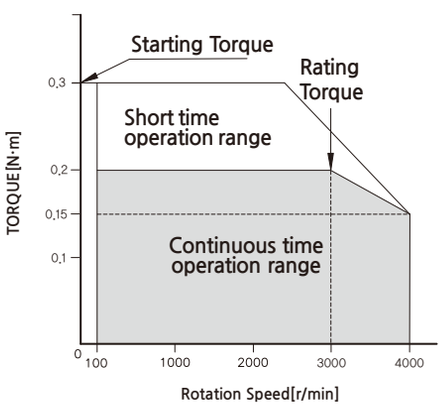

K9FS150NC / K9FH150NC

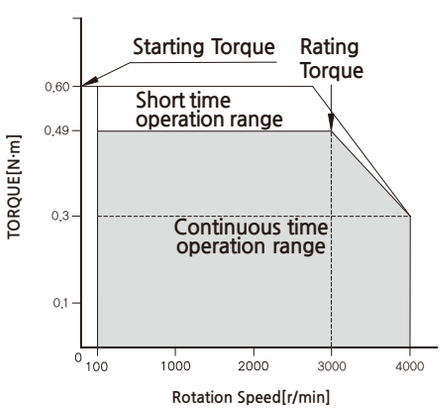

K10FS200NC / K10FH200NC

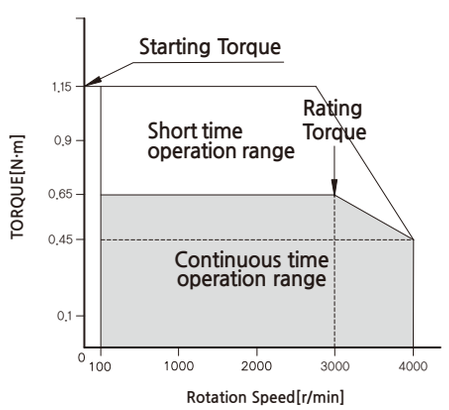

K10FS400NC / K10FH400NC

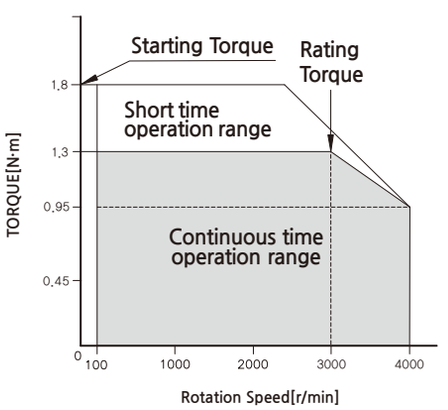

* In Dimension, in ■ of name represents power voltage U(single-phase 100~115V), C(single-phase 200~230V)

BRUSHLESS DC MOTOR UNIT - X Series

DIMENSIONS

K10XH200N2 + K10H□BTH
K10XH400N9 + K10H□BTH
(Weight : 7.3Kg)



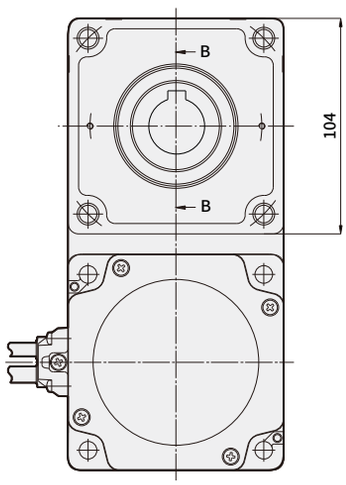

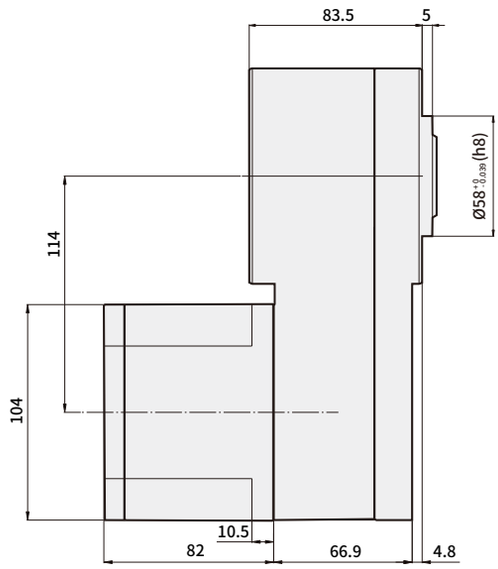

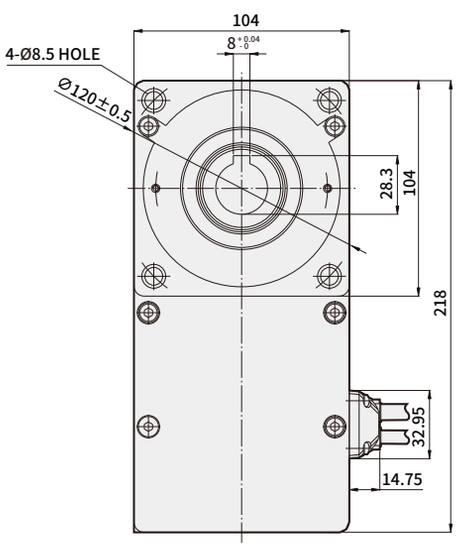

*KEY (ACCESSORY)

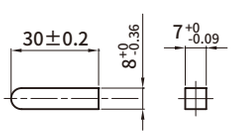

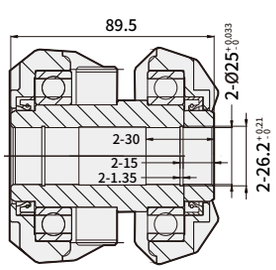

SECTION B-B

MOTOR PRODUCT NAME	GEARHEAD PRODUCT NAME	DECELERATION RATIO	FIXING BOLT
K10XH200N2 K10XH400N9	K10H□BTH	5, 10, 15, 20 30, 50, 100	M8 P1.25×100

* In Dimension, in ■ of name represents power voltage U(single-phase 100~115V), C(single-phase 200~230V)
* In □ of name, it represents a deceleration ratio.
* Mounting bolt sets are included in flat type gearbox. M8×100L (flat washer, spring washer, hexagonal nut 4pcs each)

Normal specifications

Items		Motor	Control unit
Insulation Resistance		After being operated continuously at room temperature and humidity, the value measured between coil and vase by DC 500V MEGA is greater than or equal to 100㏁	After being operated continuously at room temperature and humidity, the value measured between heatproof plate and power input is greater than or equal to 100㏁
Dielectric Strength		After being operated continuously at room temperature and humidity, there shouldn't be any problem between coil and case even when AC 0.5kV is applied for 1 minute	No problem when 50Hz, AC 0.5kV is applied for one minute No problem when AC 0.5kV is applied for one minute
Used environment	Used Ambient temperature	0℃~+50℃ (should not freeze)	
	Used Ambient Humidity	less than or equal to 85% (not from dews)	
	Vibration	Altitude less than 1000m	
	Ambient environment	Cannot be used under special circumstances such as withcorrosive gas, dust, radioactive material, magnetic and vacuum	
	Vibration	Should not apply constant vibration or huge impact according to the JIS C 60068-2-6 sine wave vibration test method Frequency range : 10~55Hz, peak amplitude : 0.15mm, sweet direction : 3 direction(X,Y,Z), number of sweeps : 20 times	
Conservation environment	Ambient temperature	-25 ~ +70℃ (should not freeze)	
	Ambient Humidity	less than or equal to 85% (not form dews)	
	Altitude	Altitude less than 3000m	
Insulation class		UL, CSA STANDARD A TYPE(105℃), EN STANDARD E TYPE(120℃)	
Protection class		IP65	IP00

* Preservation environment is a short-term value, which includes transportation.
* Do not measure insulation resistance and pressure resistance while motor and driver are connected

Delivery effciency of gearhead

	Deceleration ratio	5	10	15	20	30	50	100	200
Product name	K6H□B	90%				86%			81%
	K8H□B	90%				86%			81%
	K9H□B	90%				86%			81%
	K10H□BU	90%				86%		81%	
	K6H□BTH	80%	85%						
	K8H□BTH	85%							
	K9H□BTH	85%							
	K10H□BTH	85%							

Allowed torque of combination type

Unit = N·m

Product name	Deceleration ratio	5	10	15	20	30	50	100	200
	Speed control range[r/min]	20~600	10~300	6.7~200	5~150	3.3~100	2~60	1~30	0.5~15
K6XH30N2 + K6H□B	100~2500	0.54	1.1	1.6	2.2	3.1	5.2	6	6
	3000	0.3	0.54	0.81	1.1	1.5	2.6	5.2	6
K8XH50N2 + K8H□B	100~2500	0.9	1.8	2.7	3.6	5.2	8.6	16	16
	3000	0.45	0.9	1.4	1.8	2.6	4.3	8.6	16
K9XH100N2 + K9H□B	100~2500	1.8	3.6	5.4	7.2	10.3	17.2	30	30
	3000	0.9	1.8	2.7	3.6	5.2	8.6	17.2	30
K6XH30N2 + K6H□BTH	100~2500	0.48	1	1.5	2	3.1	5.1	10.2	17
	3000	0.2	0.51	0.77	1	1.5	2.6	5.1	10.2
K8XH50N2 + K8H□BTH	100~2500	0.85	1.7	2.6	3.4	5.1	8.5	17	34
	3000	4.3	8.5	13	17	26	4.3	8.5	17
K9XH100N2 + K9H□BTH	100~2500	1.7	3.4	5.1	6.8	10.2	17	34	68
	3000	0.85	1.7	2.6	3.4	5.1	8.5	17	34
Product name	Deceleration ratio	5	10	15	20	30	50	100	200
	Speed control range[r/min]	20~800	10~400	6.7~267	5~200	3.3~133	2~80	1~40	0.5~20
K10XH200N2 + K10H□BU	100~3000	2.9	5.9	8.8	11.7	16.8	28	52.7	70
	4000	2.0	4.1	6.1	8.1	11.6	19.4	36.5	63
K10XH400N9 + K10H□BU	100~3000	5.9	11.7	17.6	23.4	33.5	55.9	70	70
	4000	4.3	8.6	12.8	17.1	24.5	40.9	63	63
K10XH200N2 + K10H□BTH	100~3000	2.8	5.5	8.3	11.1	16.6	27.6	55.3	—
	4000	1.9	3.8	5.7	7.7	11.5	19.1	38.3	—
K10XH400N9 + K10H□BTH	100~3000	5.5	11.1	16.6	22.1	33.2	55.3	110	—
	4000	4.0	8.1	12.1	16.2	24.2	40.4	80.8	—

* Rotation direction shows the same [ ] color as the motor. In other cases, it's the opposite.
* Flat Gearbox viewed from front side is opposite rotation direction with motor.
* Flat Gearbox viewed from back side is same rotation direction with motor.

Allowed overhang load and allowed thrust

Product name		Deceleration ratio	Allowed overhand load				Allowed thrust load	
			From the end of output part 10mm		From the end of output part 20mm			
			N	kgf	N	kgf	N	kgf
GEARED MOTOR	K6XH30N2 + K6H□B	5	100	10	150	15	40	4
		10,15,20	150	15	200	20		
		30,50,100,200	200	20	300	30		
	K8XH50N2 + K8H□B	5	200	20	250	25	100	10
		10,15,20	300	30	350	35		
		30,50,100,200	450	45	550	55		
	K9XH100N2 + K9H□B	5	300	30	400	40	150	15
		10,15,20	400	40	500	50		
		30,50,100,200	500	50	650	65		
	K10XH200N2 (K10XH400N9) + K10H□BU	5,10,15,20	550	55	800	80	200	20
		30,50	1000	100	1250	125	300	30
		100,200	1400	140	1700	170	400	40
	K6XH30N2 + K6H□BTH	5,10	450	45	370	37	200	20
		15~200	500	50	400	40		
	K8XH50N2 + K8H□BTH	5,10	800	80	660	66	400	40
		15~200	1200	120	1000	100		
	K9XH100N2 + K9H□BTH	5,10	900	90	770	77	500	50
		15,20	1300	130	1110	111		
		30,50,100,200	1500	150	1280	128		
	K10FH200NC (K10FH400NC) + K10H□BTH	5, 10	1230	123	1070	107	800	80
		15, 20	1680	168	1470	147		
		30, 50, 100	2040	204	1780	178		
MOTOR	K6XS30N2		70	7	100	10	·Be careful not to weigh thrust. If it's inevitable, keep it under 50% of the motor weight.	
	K8XS50N2		120	12	140	14		
	K9XS100N2		160	16	170	17		
	K10XS200N2,K10XS400N9		197	19.7	220	22		

* In □ of name, it represents a deceleration ratio.
* Permissible overhang load can be withdrawn by calulation.

Rotation speed- torque characteristic

K6XS30N2 / K6XH30N2

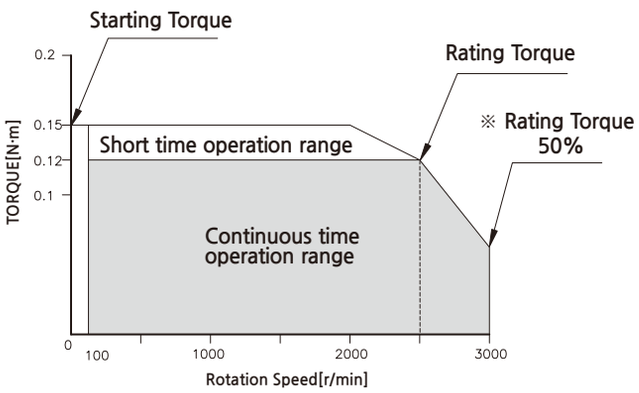

K8XS50N2 / K8XH50N2

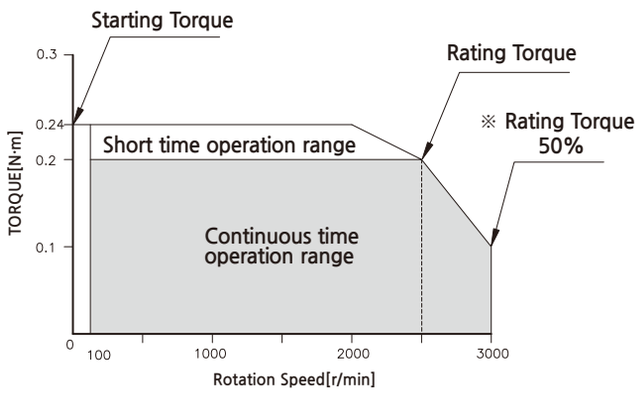

K9XS100N2 / K9XH100N2

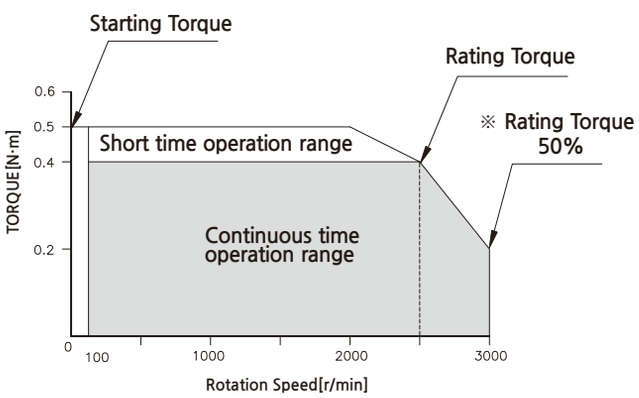

K10XS200N2/K10XH200N2

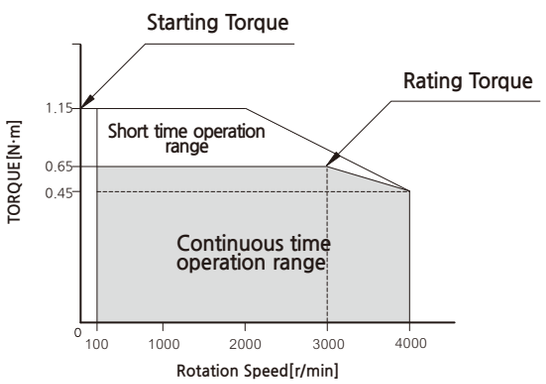

K10XS400N9/K10XH400N9

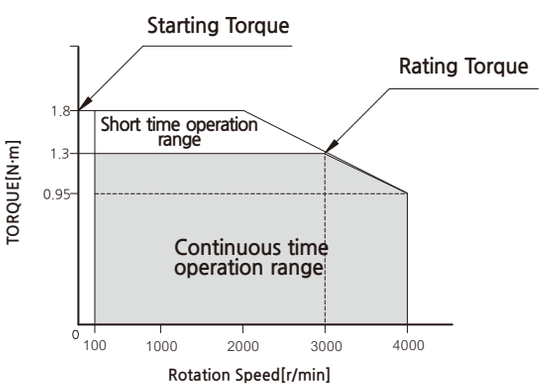

※ DC24V is the value without cable extension.