WMK-363

960H x36 Zoom Twin Motorized Zoom IR PTZ Camera

- 960H 700TVL, Effio DSP
- True WDR, x36 Zoom
- Twin motorized zoom IR(IR Distance 250m)
- -40°C~+60°C All weather High Tolerance



FEATURES

- 1/4" 613K pixels Sony Super HAD II Double scan CCD
- 700TV lines High Resolution
- Powerful x36 Optical Zoom, x32 Digital Zoom(Total x1,152)
- True WDR(x512)
- Digital Noise Reduction(2D+3D)
- Privacy Mask Function
- High Light Compensation(HLC)
- Day & Night(ICR)
- 255 Presets, 8 Tours, 8 Scans, 4 Patterns, 16 Areas, 8 Alarms
- 360° Endless Pan Rotation
- Twin motorized IR Zoom lens for IR intensity and distance adjustment
- IR Distance 250m
- Optically perfect flat viewing window preventing from blooming and smear
- -40°C~+60°C All weather High Tolerance
- Corrosion-resistant external PC housing
- Weather-proof IP66 outdoor housing
- Ease of installation and maintenance from PTZ docking cradle

DIMENSIONS

Unit : mm

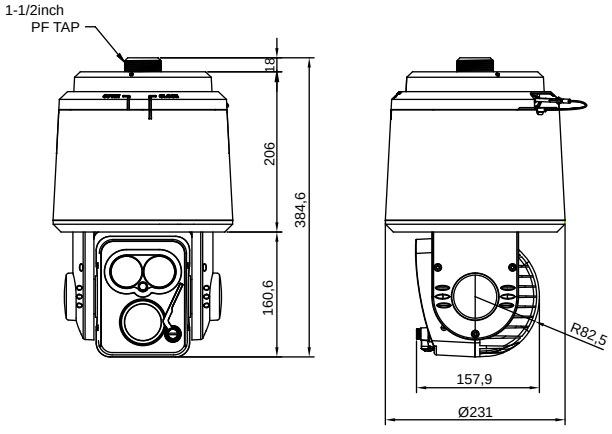

SPECIFICATIONS

MECHANICAL	
Dimensions	231(Ø) x 385mm(H)
Weight	Approximately 6.3Kg
Body	IP66, External PC / Internal Aluminum
IR LED	IR motorized Zoom
Pan	360°Continuous Pan, 0.1° to 120°/sec (proportional to zoom)
Pan Preset Speed	250°/sec, ± 0.1° Accuracy
Tilt	-8°(352°) to 188° movement, 0.8°~80°/sec (proportional to zoom)
Tilt Preset Speed	250°/sec, ± 0.05° Accuracy

ELECTRICAL	
Power Source	AC21~26V 60Hz / 50Hz(Power adaptor not included)
Heater & Cooling Fan	30W / 10000RPM Cooling Fan
Operating Temperature	-40°C to 60°C
Humidity	0% to 90% (non-condensing)

COMMUNICATION		
PTZ Control	Method	RS485(2wire) / RS-422(4wire)

CAMERA	
Image Sensor	1/4" SONY Super HAD II Double Scan CCD
Zoom	Optical x36, Digital x32
Total Pixels	NTSC : 1028 (H) x 508 (V) / PAL : 1028 (H) x 596 (V)
Scanning System	Interlace
Scanning Frequency	NTSC : 15.734KHz (H), 59.94Hz(V) / PAL : 15.625KHz(H) , 50Hz(V)
Sync.System	Internal
Resultion	700TV lines (Color) / 800TV lines (BW)
Min.Illumination	Color DSS : 0.001 lux, BW DSS:0.0004 lux / Color : 0.5lux, BW : 0.2 lux
Video Output	1.0 Vp-p (75ohm, composite)
S/N Ratio	More than 50dB(AGC off)
Focal Length	f=3.4mm~122.4mm (F 1.6 to 4.5)
Focus	Auto / Zoom -Trig / Manual
Focus Distance	0.1 / 1.3 / 1.8 / 3.0 / 5.0 m
Digital Zoom	Off / Max x2 ~ x32
Exposure	Auto / Shutter PRI / Manual
Gain Control	Off / On (Auo Max 32dB)
Shutter Speed	NTSC : 1/60 ~1/100,000sec
	PAL : 1/50~1/100,000sec
WDR / BLC	Off / WDR / BLC
Day&Night	Auto / Sens-in / Ext / Day / Night
White Balance	ATW / One-Push / Indoor / Outdoor / Manual/ Auto
Image DNR	Off / Manual / Auto
Privacy Mask	Off / 8 zones
Communication	Baud Rate : 2400 / 4800/ 9600 /19200 /38400
	Protocol : Pelco-D / Pelco-P / VISCA
Display	Disp Sel / Init Sel / Set Tilte / Set Init Msg / Language