TC-5930A/AR Shield Box



Features

- High RF Shielding
- Easy Opening/Closing of lid
- EMI filters on all Data and DC lines
- Customizable Data connections
- 19” Rack Mount Set (TC-5930AR) : TC-5930A 2EA, 19” Rack Mounting Bracket

TESCOM

Specifications

Mechanical Specifications

Dimension	
Inside	170(W) x 312(D) x 240(H) mm
Outside	217(W) x 398(D) x 282(H) mm
Door	163(W) x 238(H) mm
Weight	
	approx. 8.5 kg
***Packing**	
Size	360(W) x 515(D) x 397(H) mm
Weight	approx. 11 kg
*The size or weight of a package may vary on how to pack a package.	

Dimensions

- TC-5930A Inner Dimension

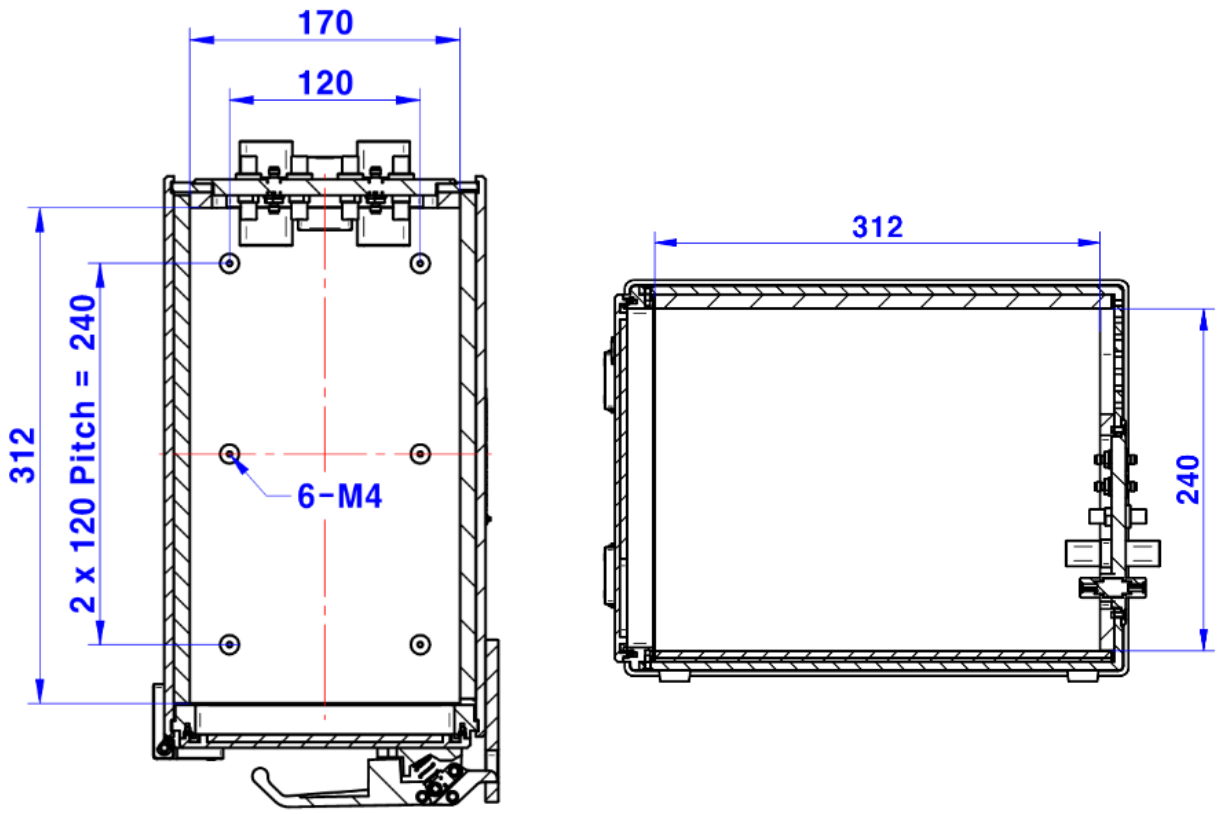

Copyright © Tescom Co., Ltd. All right reserved.
#927 Unitechvil 142, Ilsan-ro, Ilsandong-gu, Goyang-si, Gyeonggi-do, Korea [10442]
TEL: 82-31-920-6600 FAX: 82-31-920-6607 support@tescom.org http://www.tescom.co.kr

- TC-5930A Outer Dimension

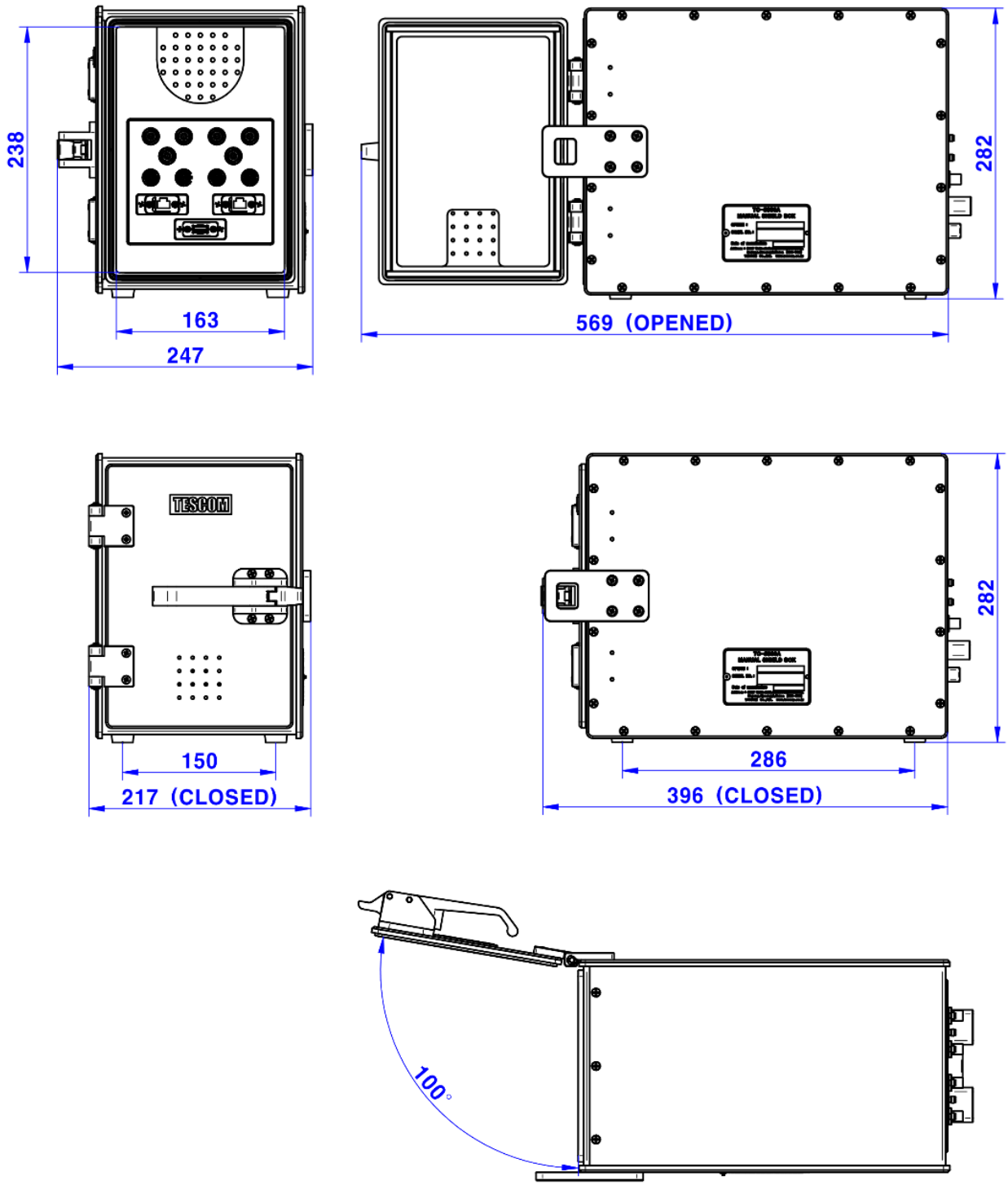

Copyright © Tescom Co., Ltd. All right reserved.
#927 Unitechvil 142, Ilsan-ro, Ilsandong-gu, Goyang-si, Gyeonggi-do, Korea [10442]
TEL: 82-31-920-6600 FAX: 82-31-920-6607 support@tescom.org http://www.tescom.co.kr

Typical RF Shielding

- The shielding effectiveness below is measured when the blank panel is mounted; other I/O interface panel results a different shielding effectiveness of the shield box.

Frequency	Shielding effectiveness (dB)
100 to 2000 MHz	〉80 dB
2000 to 3000 MHz	〉70 dB
3000 to 6000 MHz	〉60 dB

Ordering Information

Order Number	Description
TC-5930A	**Shield Box (including accessories bellow)**
	Test Report RF Cable, RG-400S, N(m) to N(m) 1 m, 1 pc
TC-5930AR	**Shield Box (TC-5930A 2 EA, 19" Rack Mount Bracket, including accessories bellow)**
	Test Report RF Cable, RG-400S, N(m) to N(m) 1 m, 2 pc

Pre-Configured I/O Interface Panel

I/O Interface Panel	Order Number	Configuration
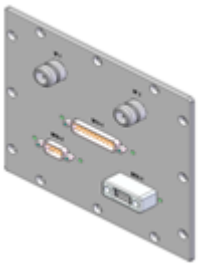 Data Interface Panel	M5930A01A	• one(1) DB25(p) outside and DB25(s) inside, 1000 pF Pi filter • one(1) DB9(p) outside and DB9(s) inside, 1000 pF Pi filter • two(2) N(f) outside and SMA(f) inside • one(1) USB 2.0 outside and inside
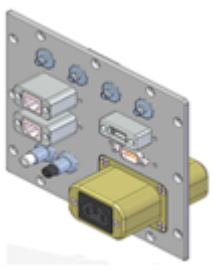 Data Interface Panel	M5930A04A	• one(1) DB9(p) outside and DB9(s) inside, 1000 pF Pi filter • four(4) SMA(f) outside and SMA(f) inside • one(1) USB 2.0 outside and inside • one(1) Banana Jack type DC power adapter • two(2) RJ-45 outside and inside • one(1) AC power Adapter

Copyright © Tescom Co., Ltd. All right reserved.
#927 Unitechvil 142, Ilsan-ro, Ilsandong-gu, Goyang-si, Gyeonggi-do, Korea [10442]
TEL: 82-31-920-6600 FAX: 82-31-920-6607 support@tescom.org http://www.tescom.co.kr

Custom I/O Interface Panel

- Customized I/O Interface panels are available. Please contact Tescom sales team or your local distri butor.

I/O Interface	Order Number	Typical Data Rate / Line Voltage	*Typical Shielding
 DB37, 1000pF pi Filter	3409-0012-1	3 Mbps / 100 VDC, 5 Amps max	>70 dB from 0.5 to 2 GHz >80 dB from 2 to 3 GHz >70 dB from 3 to 6 GHz
 DB25, 1000pF pi Filter	3409-0009-1	3 Mbps / 100 VDC, 5 Amps max	>70 dB from 0.5 to 2 GHz >80 dB from 2 to 3 GHz >70 dB from 3 to 6 GHz
 DB25, 100pF pi Filter	3409-0014-1	10 Mbps / 100 VDC, 5 Amps max	>50 dB from 0.5 to 2 GHz >60 dB from 2 to 3 GHz >60 dB from 3 to 6 GHz
 DB9, 1000pF pi Filter	3409-0008-1	3 Mbps / 100 VDC, 5 Amps max	>70 dB from 0.5 to 2 GHz >80 dB from 2 to 3 GHz >70 dB from 3 to 6 GHz
 DB9, 100pF pi Filter	3409-0010-1	10 Mbps / 100 VDC, 5 Amps max	>50 dB from 0.5 to 2 GHz >60 dB from 2 to 3 GHz >60 dB from 3 to 6 GHz
 USB 2.0 Filter	3409-0018A-3	480 Mbps / 5 V, 500 mA / Max Current: 5A	>60 dB from 0.5 to 2 GHz >70 dB from 2 to 3 GHz >70 dB from 3 to 6 GHz
 USB 3.0 Filter(Active)	3409-0042A-1	5000 Mbps / 5 V, 900 mA / Max Current: 1.5 A	>70 dB from 0.5 to 2 GHz >70 dB from 2 to 3 GHz >55 dB from 3 to 6 GHz
 RJ-45 Filter	3409-0022A	1 Gbit/s Copper-Line Ethernet (1000 BASE-T)	>60 dB from 0.5 to 2 GHz >70 dB from 2 to 3 GHz >70 dB from 3 to 6 GHz
 DC Power Adaptor,	3406-0004A	50 VDC, 3 Amps max	>70 dB from 0.5 to 2 GHz >80 dB from 2 to 3 GHz >80 dB from 3 to 6 GHz

Copyright © Tescom Co., Ltd. All right reserved.
#927 Unitechvil 142, Ilsan-ro, Ilsandong-gu, Goyang-si, Gyeonggi-do, Korea [10442]
TEL: 82-31-920-6600 FAX: 82-31-920-6607 support@tescom.org http://www.tescom.co.kr

I/O Interface	Order Number	Typical Data Rate / Line Voltage	*Typical Shielding
 DC Power Adaptor, Banana Jack Type	3406-0005A 3406-0006A	50 VDC, 10 Amps max	>70 dB from 0.5 to 2 GHz >80 dB from 2 to 3 GHz >80 dB from 3 to 6 GHz
 AC Power Adaptor	3103-0009A	250 VAC, 7 Amps max	>70 dB from 0.5 to 2 GHz >80 dB from 2 to 3 GHz >80 dB from 3 to 6 GHz
 RF, N-SMA Connector	3408-0038		>60 dB from 0.5 to 2 GHz >70 dB from 2 to 3 GHz >70 dB from 3 to 6 GHz
 RF, SMA-SMA Connector	3408-0039		>60 dB from 0.5 to 2 GHz >70 dB from 2 to 3 GHz >70 dB from 3 to 6 GHz

- Each shielding effectiveness is measured when each I/O interface panel, which is shown above, is mounted.
- Above data was measured by Tescom, The Shielding Effectiveness might be different based on the measuring method and condition.
- This data has been measured under the condition that the cables are not connected to each filters. When the cables are connected it can affect the shielding performance.

SPECIFICATIONS SUBJECT TO CHANGE WITHOUT PRIOR NOTICE

Copyright © Tescom Co., Ltd. All right reserved.
#927 Unitechvil 142, Ilsan-ro, Ilsandong-gu, Goyang-si, Gyeonggi-do, Korea [10442]
TEL: 82-31-920-6600 FAX: 82-31-920-6607 support@tescom.org http://www.tescom.co.kr