www.hkvalve.net



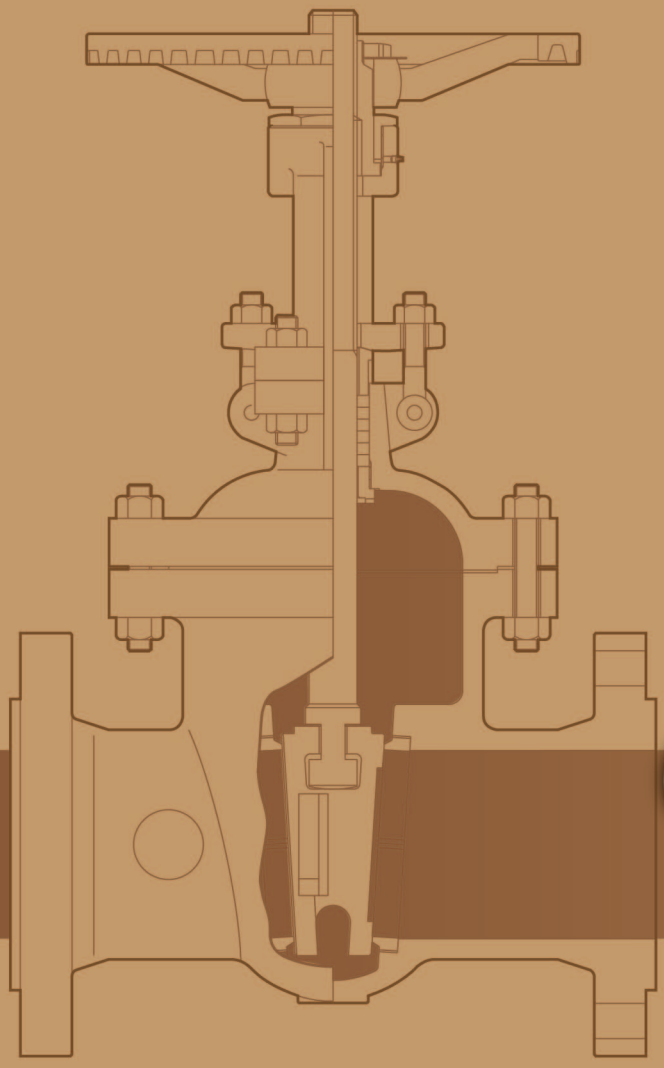

GATE VALVES
BOLTED BONNET

CAST STAINLESS STEEL
GATE VALVES BOLTED BONNET

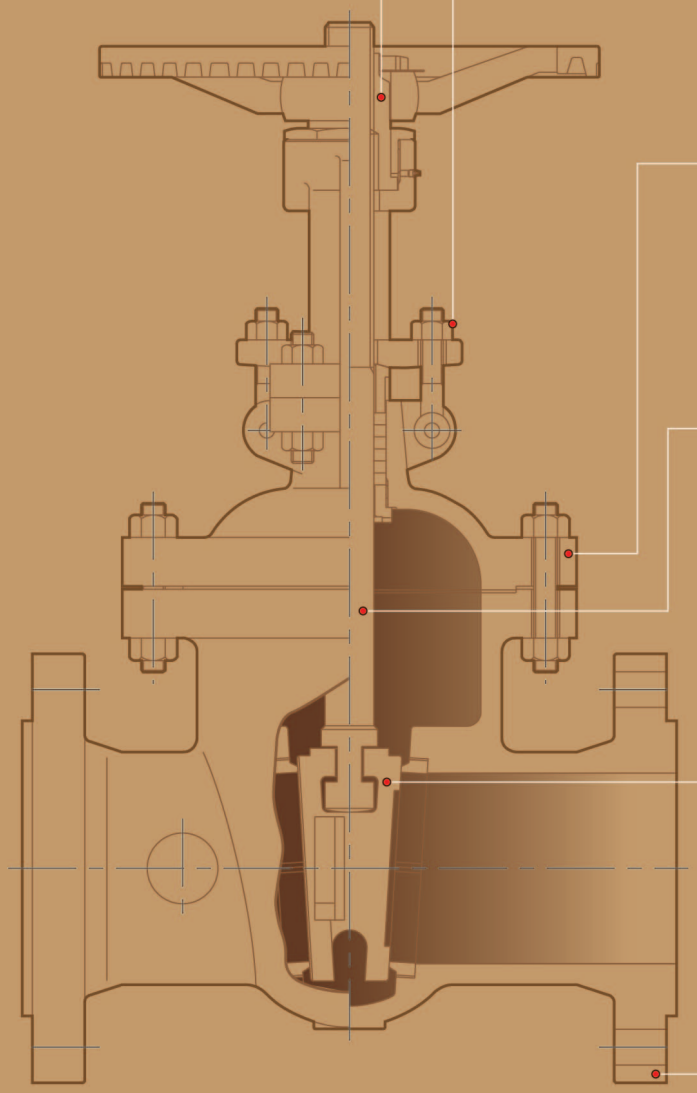

STEM NUT
The upper portion of the Yoke Sleeve is hexagonally tapered to fix hand-wheel. The standard material of the Yoke Sleeve is Nodular Ni-resist D2 with over 1150°C(2100°F) dissolution point in accordance with API std. specifications.

BOLTING
Bonnet studs and nuts are manufactured from alloy or stainless steel to the relevant ASTM standard.

BONNET
The bonnet is in stainless steel. It is machined to accept the yoke sleeve and incorporates a stuffing box dimension in accordance with the API standard.

STEM
The stem is part of the trim. A stem is provided with a T-head. A ground backseat is provided to endure perfectly tight seal to the stuffing box when the valve is fully open.
The stem is ground to minimize friction and prevent damage to gland packing. The threading is trapezoidal ACME type. Dimensions comply with the applicable Standard.

WEDGE
The wedge is part of the trim. It is normally supplied as flexible. It is connected to the stem by means of a T-joint. The guides on each side of the wedge are casted for proper alignment with the body guides. Special attention is given to the seating surface, which are ground and lapped to insure a perfectly tight seal.

BODY
The body is in cast stainless steel and is carefully designed in all its details. The basic dimension, i.e. wall thickness, face to face and flanges comply with the relevant API and ANSI standards. The sealing surfaces for connection to the bonnet are flat finish in the 150lb Class, recessed in the 300lb Class or may be ring joint in the 150lb Class in the 600lb Class and above. Bosses may be provided for drain taps or by-pass piping.

CAST STAINLESS STEEL

NO	NAME OF PART	ASTM SPECIFICATION CORROSION SERVICE				REMARKS
1	BODY	A351-CF8	A351-CF8M	A351-CF3	A351-CF3M	
2	BONNET	A351-CF8	A351-CF8M	A351-CF3	A351-CF3M	
3	DISC	A351-CF8	A351-CF8M	A351-CF3	A351-CF3M	
4	STEM	A276-304	A276-316	A276-304L	A276-316L	
5	STEM NUT	A439-D2	A439-D2	A439-D2	A439-D2	
6	PACKING GLAND	A276-304	A276-316	A276-316L	A276-316L	
8	GLAND FLANGE	A351-CF8 / A240-304	A351-CF8 / A240-304	A351-CF8 / A240-304	A351-CF8 / A240-304	
9	BONNET BOLT	A193-B8	A193-B8	A193-B8	A193-B8	
10	BONNET NUT	A194-8	A194-8	A194-8	A194-8	
11	GLAND BOLT	A193-B8	A193-B8	A193-B8	A193-B8	
12	GLAND NUT	A194-8	A194-8	A194-8	A194-8	
13	HINGE PIN	A276-304	A276-304	A276-304	A276-304	
14	HAND WHEEL	A395	A395	A395	A395	
15	HAND WHEEL NUT	A307-B+ZN PLATED	A307-B+ZN PLATED	A307-B+ZN PLATED	A307-B+ZN PLATED	
16	PACKING	COMMERCIAL	COMMERCIAL	COMMERCIAL	COMMERCIAL	NOTE 1
17	GASKET	COMMERCIAL	COMMERCIAL	COMMERCIAL	COMMERCIAL	NOTE 1
18	YOKE	A351-CF8	A351-CF8/CF8M	A351-CF8/CF3	A351-CF8/CF3M	
19	YOKE BOLT	A193-B8	A193-B8	A193-B8	A193-B8	
20	YOKE NUT	A194-8	A194-8	A194-8	A194-8	
21	SET SCREW	A307-B	A307-B	A307-B	A307-B	
22	GREASE NIPPLE	B16	B16	B16	B16	
23	SLEEVE GLAND	A351-CF8	A351-CF8M	A351-CF3	A351-CF3M	

* Note 1. Packing & gasket material : customer's requirements, see page 63

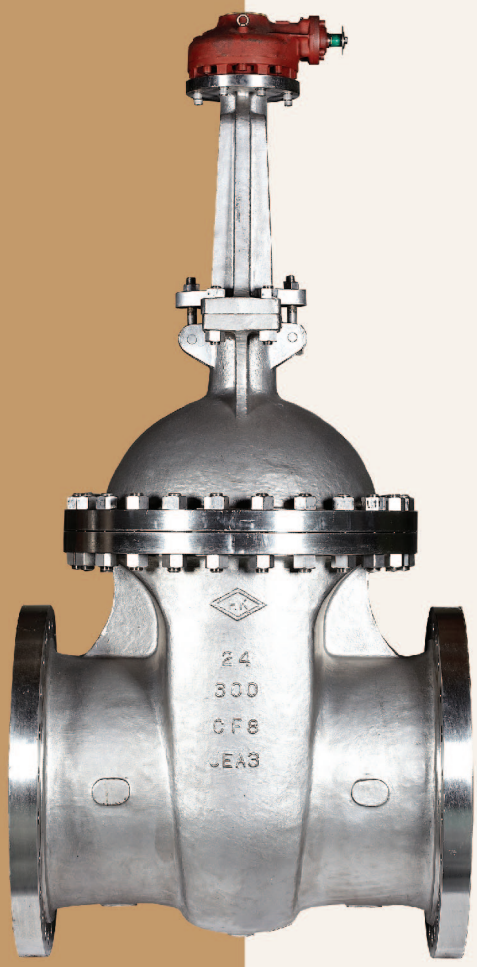

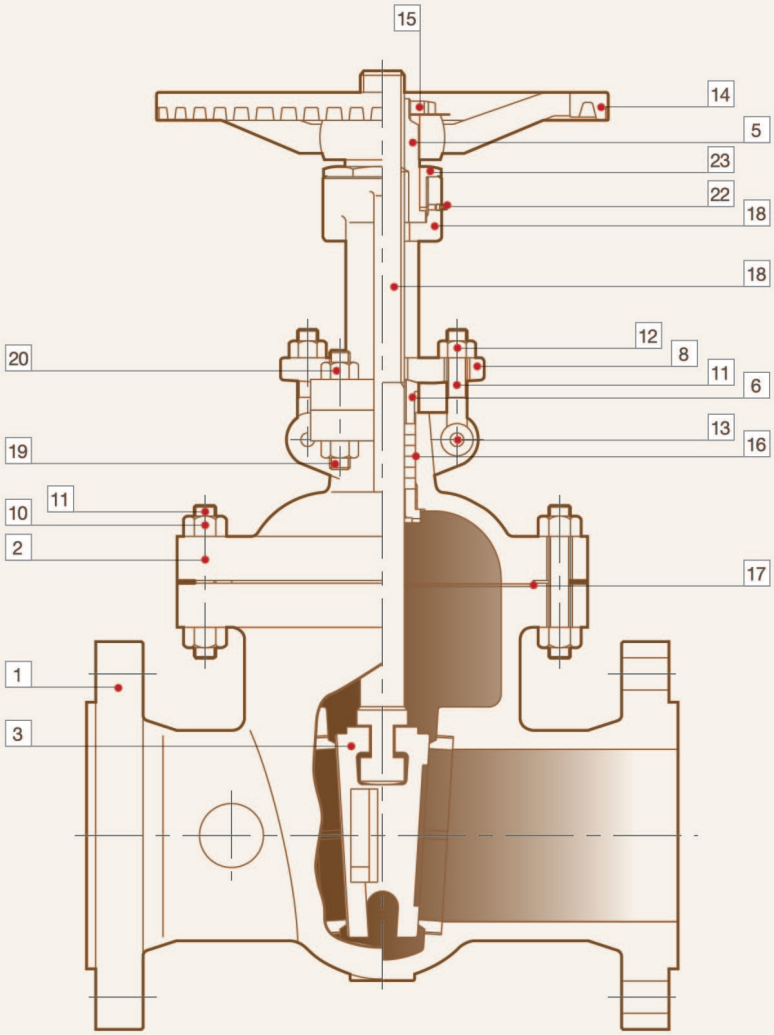

ASME CLASS 150LB

GATE VALVES
BOLTED BONNET
CAST STEEL

VALVE SIZE		2	2 1/2	3	4	5	6	8	10	12	14	16	18	20	24	28	30	36	40
	mm	50	65	80	100	125	150	200	250	300	350	400	450	500	600	700	750	900	1000
L1	inch	7.0	7.5	8.0	9.0	10.0	10.5	11.5	13.0	14.0	15.0	16.0	17.0	18.0	20.0	24.0	24.0	28.0	30.0
	mm	178	191	203	229	254	267	292	330	356	381	406	432	457	508	610	610	711	762
L3	inch		9.5	11.12	12.0	15.0	15.88	46.5	18.0	19.75	22.5	24.0	26.0	28.0	32.0	36.0	36.0	40.4	42.0
	mm	216	241	283	305	381	403	419	457	502	572	610	660	711	813	914	914	1016	1067
H	inch	14.0	16.3	18.4	22.2	26.5	30.0	41.9	50.6	58.3	60.0	68.7	79.1	91.7	109.6	127.4	134.5	161.8	183.9
	mm	356	415	468	565	674	762	1065	1285	1480	1523	1745	2010	2330	2784	3236	3417	4109	4670
W	inch	7.7	7.7	8.5	9.4	11.0	11.8	14.0	15.7	17.7	13.8	13.8	13.8	17.7	17.7	22.0	22.0	27.9	31.5
	mm	195	195	215	240	280	300	355	400	450	350	350	350	450	450	560	560	710	800
L	inch	-	-	-	-	-	-	-	-	-	13.1	13.1	13.1	14.3	14.3	16.3	16.3	18.4	20.7
	mm	-	-	-	-	-	-	-	-	-	332	332	332	362	362	414	414	468	526
WEIGHT	LB	44.1	55.1	66.2	97.0	132.3	154.4	233.7	368.2	526.9	760.7	1080.5	1274.5	1611.9	2280.0	3572.1	4057.2	7497.0	9481.5
	Kg	20	25	30	44	60	70	106	167	239	345	490	578	731	1043	1620	1840	3400	4300

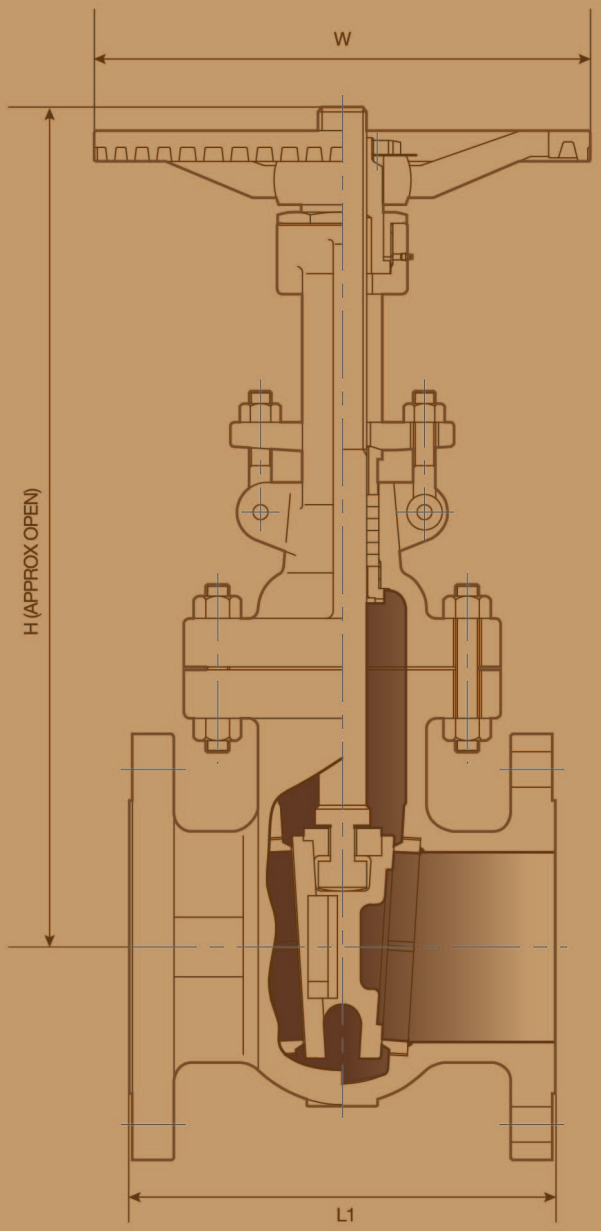

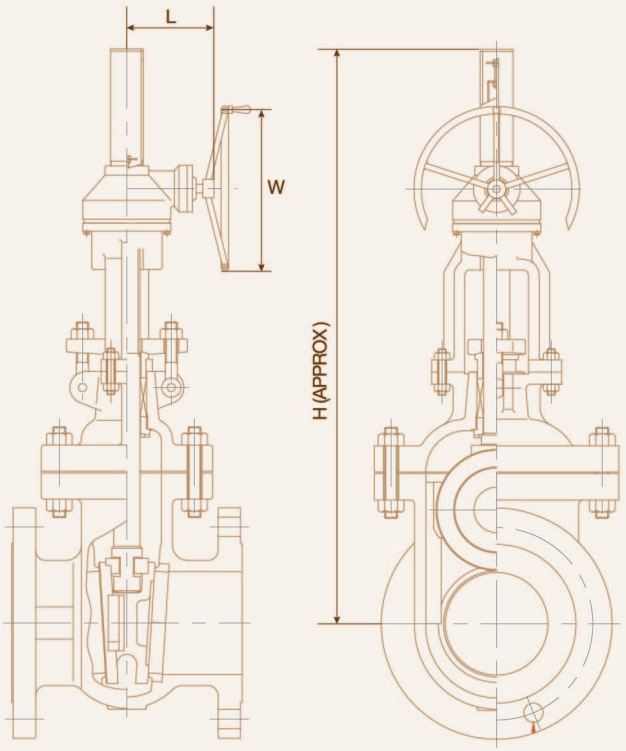

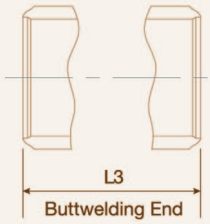

ASME CLASS 300LB

GATE VALVES
BOLTED BONNET
CAST STEEL

VALVE SIZE		2	2 1/2	3	4	5	6	8	10	12	14	16	18	20	24	28	30	36	40	42
		50	65	80	100	125	150	200	250	300	350	400	450	500	600	700	750	900	1000	1050
L1 & L3	inch	8.5	9.5	11.12	12.0	15.0	15.88	16.5	18.0	19.75	30.0	33.0	36.0	39.0	45.0	53.0	55.0	68.0	76.0	78.0
	mm	216	241	293	305	381	403	419	457	502	762	838	914	991	1143	1346	1397	1727	1930	1981
L2	inch	9.12	10.12	11.74	12.62	15.63	16.5	17.12	18.62	20.37	30.62	33.62	36.62	39.75	45.88	54.0	56.0	69.12	-	-
	mm	231.6	257	298	321	397	419	435	473	518	778	854	930	1010	1165	1372	1422	1756	-	-
H	inch	16.3	17.5	20.5	23.2	28.3	33.3	40.4	48.2	61.4	60.0	68.7	79.1	91.7	109.6	130.0	148.5	169.8	188.6	198.1
	mm	415	445	520	590	720	845	1025	1225	1560	1523	1745	2010	2330	2784	3302	3772	4312	4791	5032
W	inch	7.7	7.7	8.5	9.4	11.0	14.0	15.7	17.7	19.7	17.7	17.7	22.0	22.0	27.9	35.4	35.4	30.0	30.0	30.0
	mm	195	195	215	240	280	355	400	450	500	450	450	560	560	710	900	900	760	760	760
L	inch	-	-	-	-	-	-	-	-	-	14.3	14.3	16.3	16.3	18.4	21.8	21.8	21.8	20.2	20.2
	mm	-	-	-	-	-	-	-	-	-	362	36	414	414	468	554	554	554	512	512
WEIGHT	LB	52.9	75.0	90.4	143.3	209.5	257.9	401.3	268.2	1060.6	1528.1	2094.8	2535.8	3307.5	4961.3	6637.1	8595.6	10579.2	15428.0	18734.0
	Kg	24	34	41	65	95	117	182	355	481	693	950	1150	1500	2250	3010	3900	4800	7000	8500

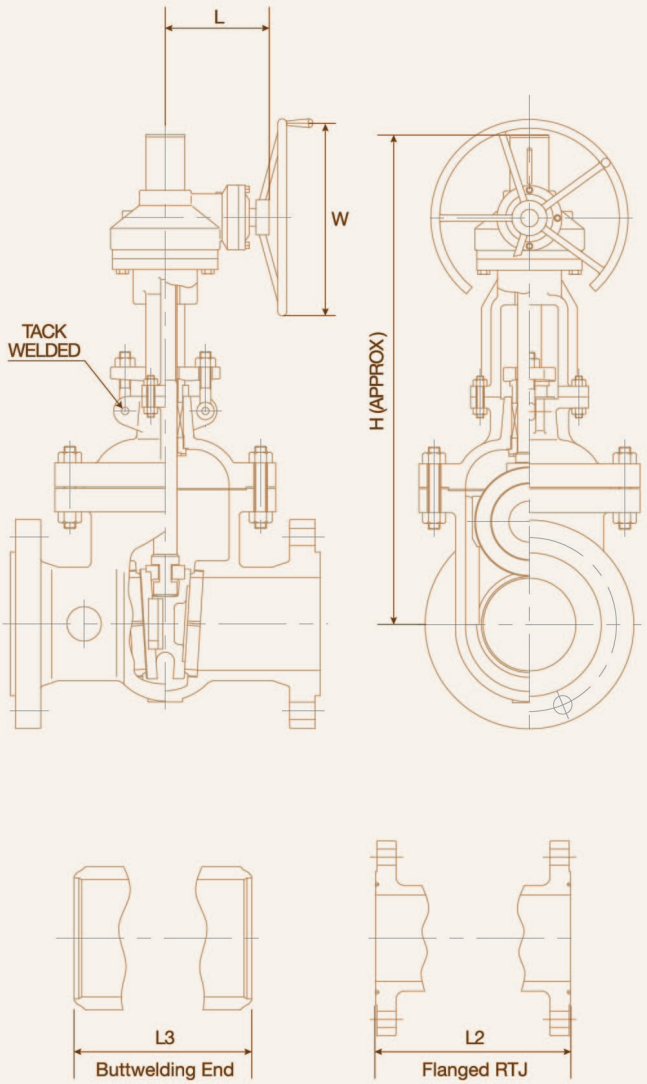

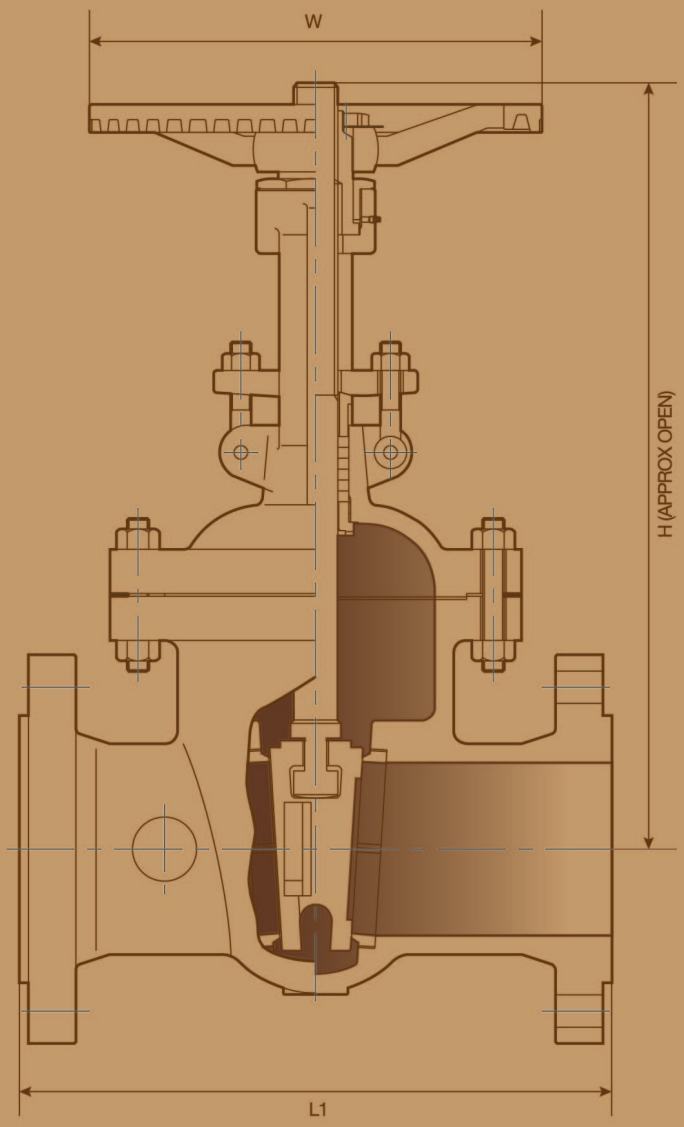

ASME CLASS 600LB

GATE VALVES
BOLTED BONNET
CAST STEEL

VALVE SIZE		2	2 1/2	3	4	5	6	8	10	12	14	16	18	20	24
	mm	50	65	80	100	125	150	200	250	300	350	400	450	500	600
L1 & L3	inch	11.5	13.0	14.0	17.0	20.0	22.0	26.0	31.0	33.0	35.0	39.0	43.0	47.0	55.00
	mm	292	330	356	432	580	556	660	787	838	889	991	1092	1194	1397
L2	inch	11.62	13.12	14.12	17.12	19.57	22.12	26.12	31.12	33.12	35.12	39.12	43.12	47.25	55.38
	mm	295	333	359	435	497	562	664	791	841	892	991	1095	1200	1406
H	inch	18.7	21.6	23.5	26.8	31.5	36.6	45.7	53.1	61.8	72.1	82.9	98.0	104.8	116.9
	mm	475	550	598	680	800	930	1160	1350	1570	1832	2106	2489	2662	2970
W	inch	7.7	7.7	9.4	11.8	14.0	17.7	17.7	19.7	22.0	22.0	27.9	27.9	31.5	35.4
	mm	195	195	240	300	355	450	450	500	560	560	710	710	800	900
L	inch	-	-	-	-	-	-	-	-	16.3	16.3	18.4	18.4	20.7	26.4
	mm	-	-	-	-	-	-	-	-	414	414	468	468	526	670
WEIGHT	LB	79.4	127.9	154.4	269.0	441	551.2	893.0	1433.2	1896.3	2734.2	3109.1	4890.7	6198.3	8656.8
	Kg	36	58	70	122	200	250	405	650	860	1240	1410	2218	2811	3926

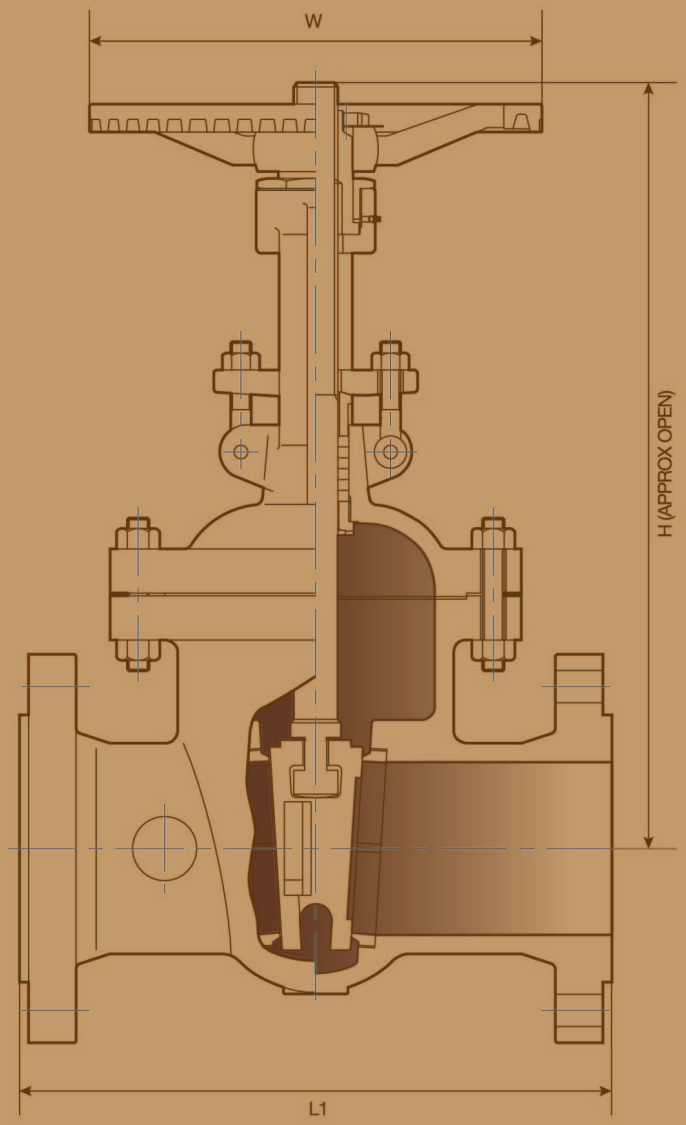

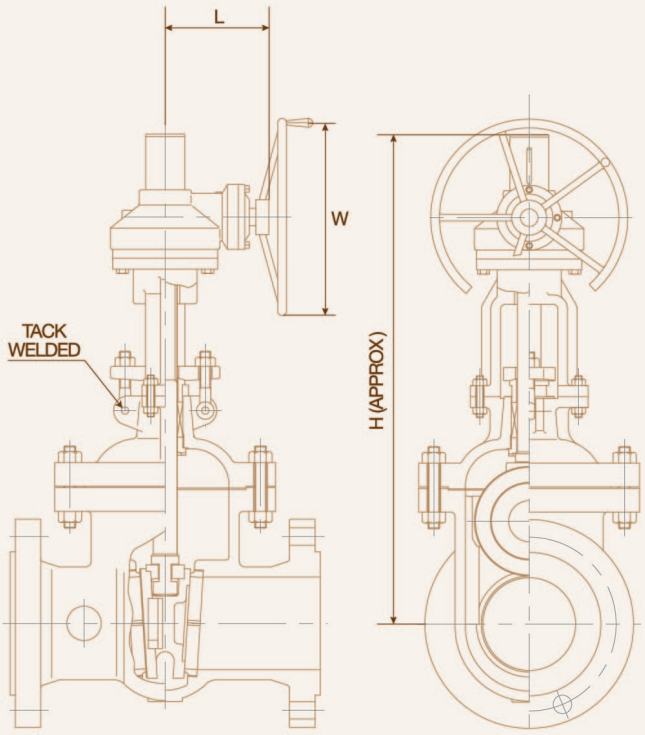

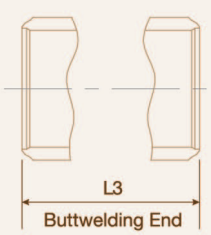

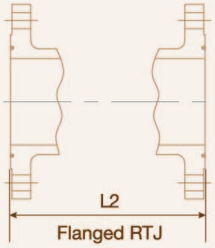

ASME CLASS 900LB

GATE VALVES
BOLTED BONNET
CAST STEEL

VALVE SIZE		2	2 1/2	3	4	5	6	8	10	12	14	16	18	20	24
		50	65	80	100	125	150	200	250	300	350	400	450	500	600
L1 & L3	inch	14.5	16.5	15.0	18.0	22.0	24.0	29.0	33.0	38.0	40.5	44.5	48.0	52.0	61.0
	mm	368	419	381	457	559	610	737	838	965	1029	1130	1219	1321	1549
L2	inch	14.62	16.62	15.12	18.12	22.13	24.12	29.12	33.12	38.12	40.88	44.88	48.5	52.5	61.75
	mm	371	422	384	460	562	613	740	841	968	1038	1140	1232	1334	1568
H	inch	21.2	26.4	26.4	30.8	37.1	42.4	55.5	67.7	77.4	74.9	80.7	88.8	110.2	124.0
	mm	539	670	672	782	943	1076	1411	1720	1965	1902	2051	2256	2800	3150
W	inch	11.8	11.8	14.0	15.7	19.7	22.0	17.7	22.0	22.0	24.0	24.0	30.0	30.0	24.0
	mm	300	300	355	400	500	560	450	560	560	610	610	760	760	610
L	inch	-	-	-	-	-	-	14.3	16.3	16.3	20.0	20.2	21.8	21.8	20.2
	mm	-	-	-	-	-	-	362	414	414	512	512	554	554	512
WEIGHT	LB	181	341.8	364	384	661.5	999	1720	2752	3400	4895.1	6615	8533.4	10716.3	16096.5
	Kg	82	155	165	174	300	453	780	1248	1542	2220	3000	3870	4860	7300

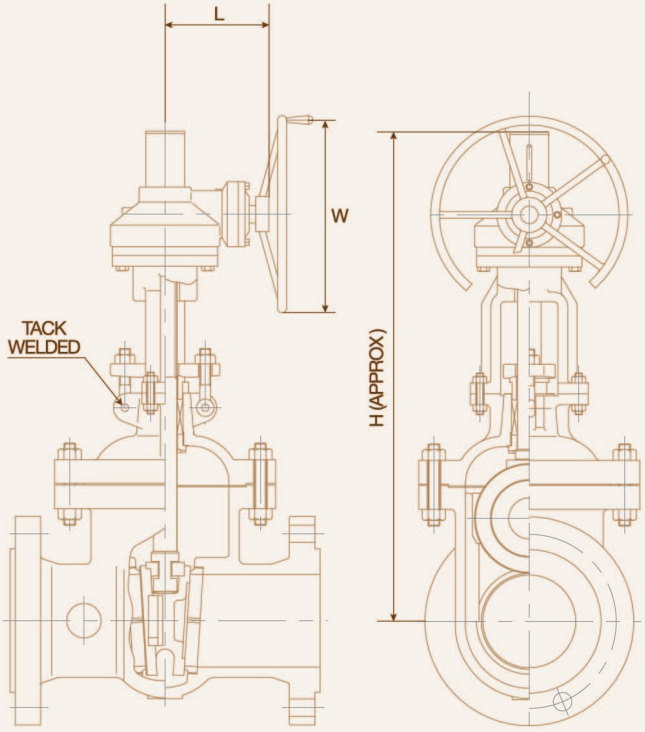

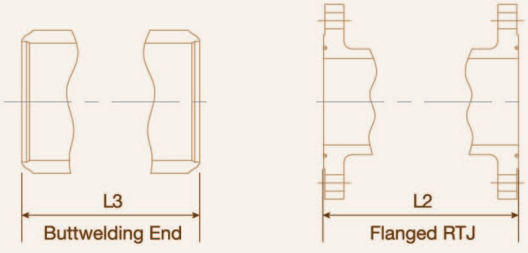

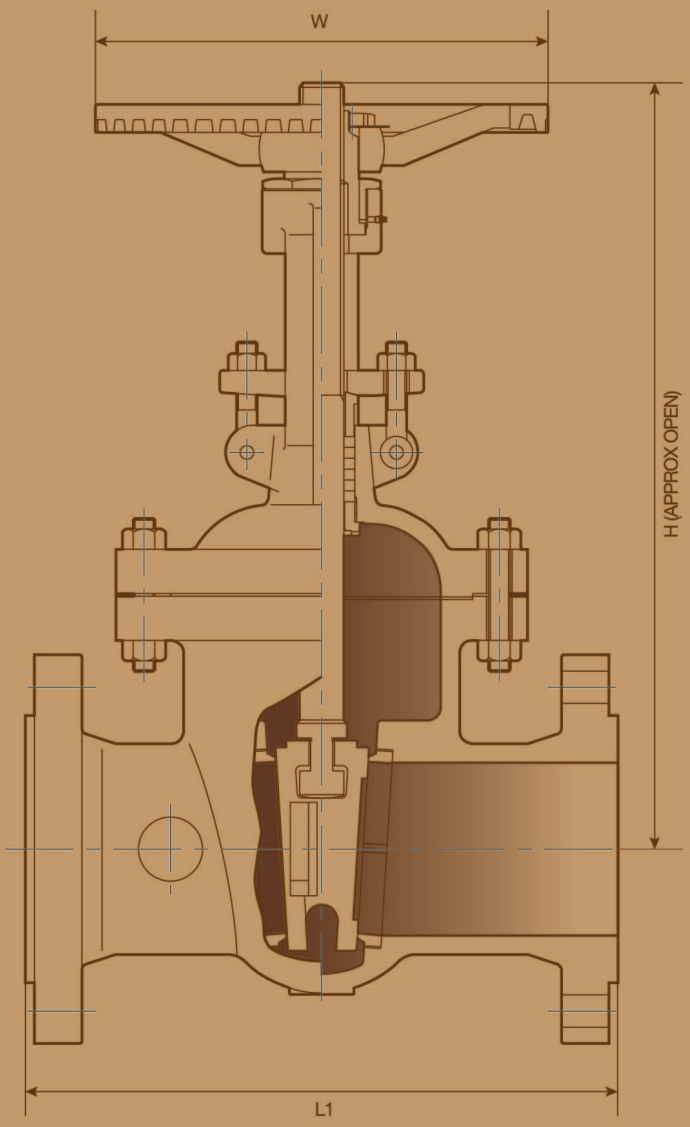

ASME CLASS 1500LB

GATE VALVES
BOLTED BONNET
CAST STEEL

VALVE SIZE		2	2 1/2	3	4	5	6	8	10	12	14	16
		50	65	80	100	125	150	200	250	300	350	400
L1 & L3	inch	14.5	16.5	18.5	21.5	26.5	27.75	32.75	39.0	44.5	49.5	54.5
	mm	368	419	470	546	673	705	832	991	1130	1257	1384
L2	inch	14.62	16.62	18.62	21.62	26.61	28.0	33.13	39.38	45.12	50.25	55.38
	mm	371	422	473	549	676	711	842	1000	1146	1276	1407
H	inch	21.2	26.4	29.1	30.8	43.62	47.0	60.8	66.5	82.3	85.1	97.9
	mm	539	670	738	783	1108	1196	1546	1688	1090	2167	2486
W	inch	11.8	11.8	15.7	19.7	24.8	13.8	22.0	27.9	27.9	30.0	30.0
	mm	300	300	400	500	630	350	560	710	710	760	760
L	inch	-	-	-	-	-	13.1	16.3	18.4	18.4	21.8	21.8
	mm	-	-	-	-	-	332	414	468	468	554	554
WEIGHT	LB	181	341.8	401	573	926.1	1360	3175	4412	8417	9073.6	15324.8
	Kg	82	155	182	260	420	617	1440	2001	3816	4115	6950

