MULTI S MIXERS (S3~S9 SERIES) Top and side-mount type

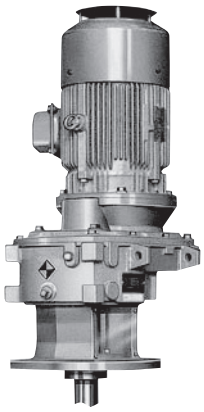

S4 Series

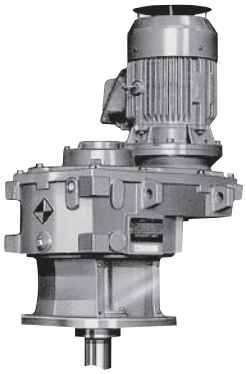

S5 Series

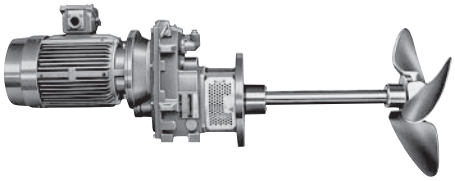

S4 side-mount one-step gear reduction type

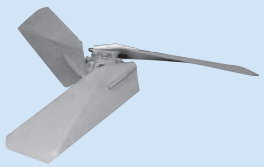

HR320 Impeller

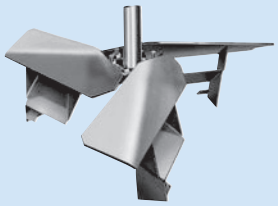

HR320S Impeller

Medium to large-sized mixers with a wide range of variations (from 0.75 to 90 kW)

■ Features

- A new twist is added in the arrangement of gears. Interchangeability of components is further advanced.
- The number of speed and motor output combinations is substantially increased to 17.
- An impeller having a simple three-bladed axial flow design in one stage has been developed, featuring a high discharge coefficient and a low drag coefficient.

The impeller features a high discharge rate.

■ Features

◆HR320 Impeller

- The impeller has an angular advance, which directs the liquid flow towards the shaft center.
- Due to the angular advance, liquid flow separation from the rear of the blade is minimized; thus, a large discharge is achieved.

◆HR320S Impeller

- Employs a double-bladed configuration, which produces the same effect as that of a slotted flap and leading edge slat of an aircraft. This enables high discharge speed.
- HADO's original wing-tip blade has eliminated the need for a stabilizer ring and enabled operations in cases where the liquid level passes over the impeller position.

■ Specifications

●Side-mount model variations (50Hz/60Hz)

			Motor output(kW)							
		Speed(rpm)	3.7	5.5	7.5	11	15	18.5	22	30
One-step reduction	50 Hz	350		S3	S3	S4	S4	S5	S5	S5
		280		S3	S3	S4	S4	S5	S5	S5
		230 (*)	S3	S3	S4	S4	S5	S5	S5	
	60 Hz	350		S3	S3	S4	S4	S5	S5	S5
		280 (*)	S3	S3	S4	S4	S5	S5	S5	
		230 (*)	S3	S3	S4	S4	S5	S5	S5	

※ (*) in the above table indicates 6P motor.

■ Specifications

●Top-mount model variations (50Hz)

		Motor output(kW)														
	Speed (rpm)	0.75	1.5	2.2	3.7	5.5	7.5	11	15	18.5	22	30	37	45	55	75	90
One-step reduction	350					S3	S3	S4	S4	S5	S5	S5					
	280					S3	S3	S4	S4	S5	S5	S5					
	230(*)				S3	S3	S4	S4	S5	S5	S5						
	190(*)				S3	S3	S4	S4	S5	S5	S5						
Two-step reduction	155			S3	S3	S4	S4	S5	S5	S6	S6	S6	S7	S7	S8L	S8L	S8L
	125		S3	S3	S3	S4	S4	S5	S5	S6	S6	S6	S7	S7	S8L	S8L	S8L
	100		S3	S3	S4	S4	S4	S5	S5	S6	S6	S6	S7	S7	S8L	S8L	S8L
	84		S3	S3	S4	S4	S5	S5	S6	S6	S6	S7	S7	S7	S8L	S8L	S8H
	68		S3	S3	S4	S5	S5	S5	S6	S6	S6	S7(*)	S7(*)	S8L(*)	S8L(*)	S8H(*)	
	56									S6	S7(*)	S7(*)	S7(*)	S8L(*)	S8H(*)		
Three-step reduction	56	S3	S3	S4	S4	S5	S5	S6	S6								
	45	S3	S3	S4	S5	S5	S5	S6	S6	S7	S7	S7	S8L	S8H	S8H	S9L	S9H
	37	S3	S4	S4	S5	S5	S6	S6	S7	S7	S7	S8L	S8H	S8H	S9L	S9H	S9H
	30	S3	S4	S4	S5	S6	S6	S7	S7	S7	S8L	S8H	S8H	S9L	S9H	S9H	
	25	S3	S4	S5	S5	S6	S6	S7	S7	S8L	S8L	S8H	S9L	S9H	S9H		
	20	S4	S4	S5	S5	S6	S6	S7	S7	S8L	S8H	S9L	S9H	S9H			
	16.5(*)	S4	S5	S5	S6	S6	S7	S7	S8L	S8H	S9L	S9H	S9H				
	13.5(*)	S4	S5	S5	S6	S7	S7		S8H	S9L	S9H	S9H					

※ (*) in the above table indicates 6P motor.

Design registration pending

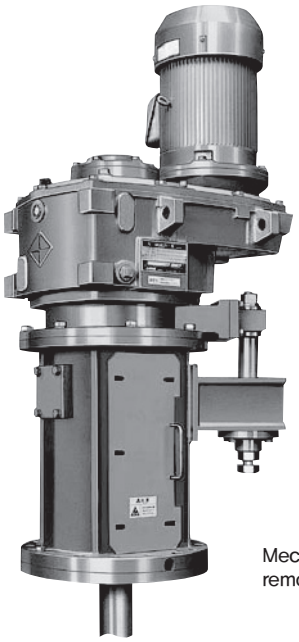

Mechanical seal removable mixer

Mixers that allow easy replacement of mechanical seal

■ Features

- The existing mechanical seal can be easily replaced with a new one without removing the reduction gear unit.
- The reduction gear unit can be swung aside to allow the mechanical seal to be pulled out overhead.
- The time required for maintenance is significantly reduced.

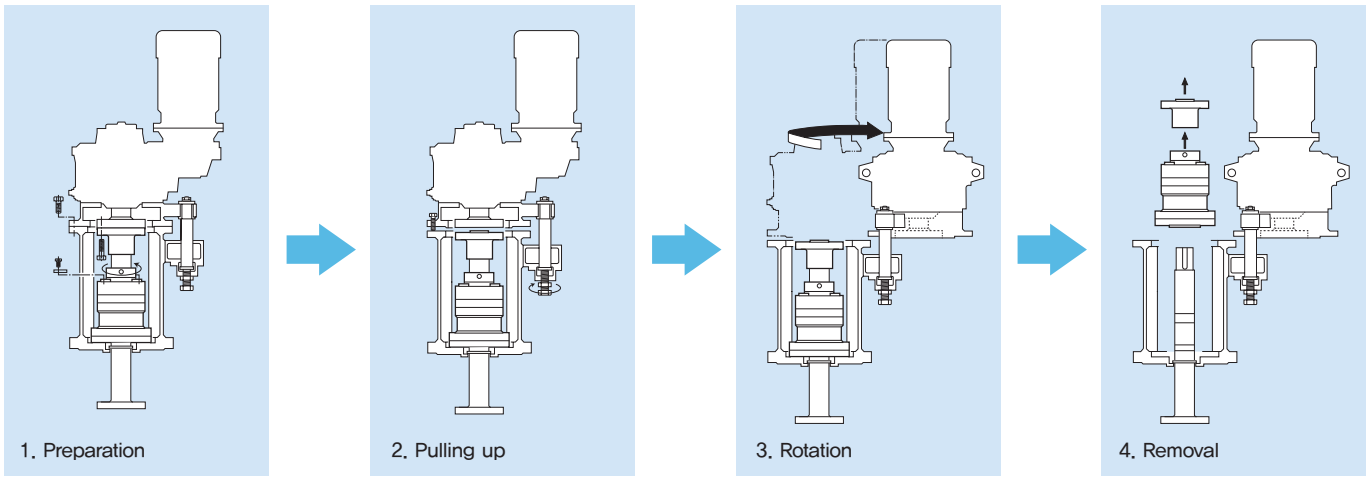

■ Specifications

●Top-mount model variations (60Hz)

		Motor output(kW)															
	Speed (rpm)	0.75	1.5	2.2	3.7	5.5	7.5	11	15	18.5	22	30	37	45	55	75	90
One-step reduction	350					S3	S3	S4	S4	S5	S5	S5					
	280(*)				S3	S3	S4	S4	S5	S5	S5						
	230(*)				S3	S3	S4	S4	S5	S5	S5						
Two-step reduction	190			S3	S3	S4	S4	S5	S5	S6	S6	S6	S7	S7	S8L	S8L	S8L
	155			S3	S3	S4	S4	S5	S5	S6	S6	S6	S7	S7	S8L	S8L	S8L
	125		S3	S3	S3	S4	S4	S5	S5	S6	S6	S6	S7	S7	S8L	S8L	S8L
	100		S3	S3	S4	S4	S4	S5	S5	S6	S6	S6	S7	S7	S8L	S8L	S8L
	84		S3	S3	S4	S4	S5	S5	S6	S6	S6	S7(*)	S7(*)	S8L(*)	S8L(*)	S8L(*)	
	68									S6	S6	S7(*)	S7(*)	S8L(*)	S8L(*)	S8H(*)	
Three-step reduction	68		S3	S3	S4	S5	S5	S5	S6								
	56	S3	S3	S4	S4	S5	S5	S6	S6	S7	S7	S7	S7	S8L	S8H	S9L	S9L
	45	S3	S3	S4	S5	S5	S5	S6	S6	S7	S7	S7	S8L	S8H	S8H	S9L	S9H
	37	S3	S4	S4	S5	S5	S6	S6	S7	S7	S7	S8L	S8H	S8H	S9L	S9H	S9H
	30	S3	S4	S4	S5	S6	S6	S7	S7	S7	S8L	S8H	S8H	S9L	S9H	S9H	
	25	S3	S4	S5	S5	S6	S6	S7	S7	S8L	S8L	S8H	S9L	S9H	S9H		
	20(*)	S4	S4	S5	S6	S6	S7	S7	S8L	S8L	S8H	S9L	S9H	S9H			
	16.5(*)	S4	S5	S5	S6	S6	S7	S7	S8L	S8H	S9L	S9H	S9H				

※ (*) in the above table indicates 6P motor.

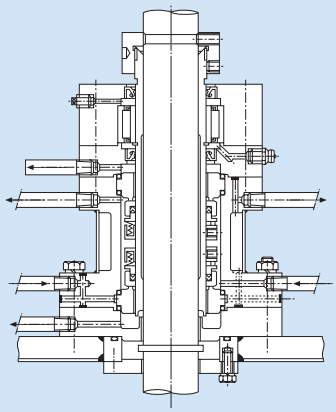

Double mechanical seal(Built-in-bearing)
- Tank temperature: 300℃ or less
- Tank pressure: F.V~0.99 MPaG or less