TC-93021B Flat Type Antenna Coupler



Front View



Side View

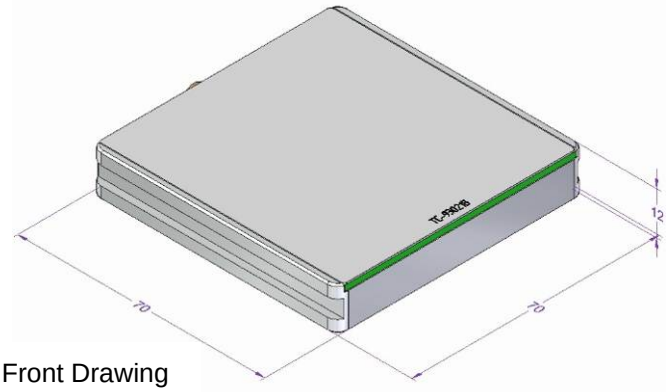

Front Drawing

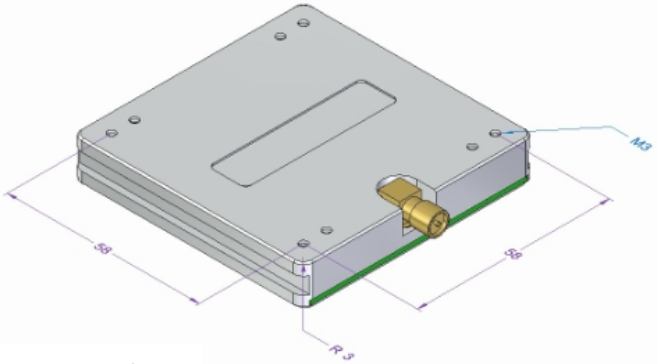

Rear Drawing

Specification

Frequency Range	80 ~ 2650 MHz
RF Connector	SMA(f)
Dimension	70(W) x 70(D) x 12(H) mm
Weight	80 g
Terminal	50 ohm
VSWR	better than 1 : 1.7

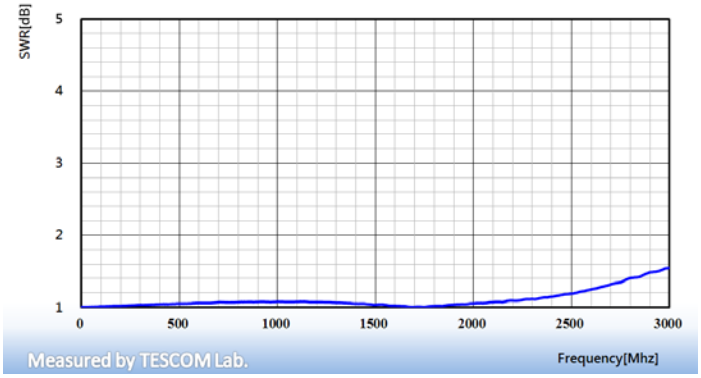

Typical VSWR of TC-93021B

Ordering Information

Order Number	Description
TC-93021B	**Flat Type Antenna Coupler (including accessories bellow)** SMA(m) R/A to SMA(m) cable, 34 cm - 4005-0007

Copyright © 2012 Tescom Co., Ltd. All right reserved.

#927 Unitechvil, Baekseok, Ilsandong, Goyang,Gyeonggi, Korea [410-722]
***TEL: 82-31-920-6601* FAX: 82-31-920-6607** *tescom-sales@tescom.org http://www.tescom.co.kr*