SMDKV310 Product Guide Book

The SMDKV310(S5PV310 Development Kit) is the official reference/evaluation board for Samsung S5PV310.
It is the basic system-based hardware design which uses the S5PV310.
It can evaluate the basic operations of the S5PV310 and assist in developing codes.

Smile with you.

www.yicsystem.com

YIC SYSTEM

INTRODUCTION

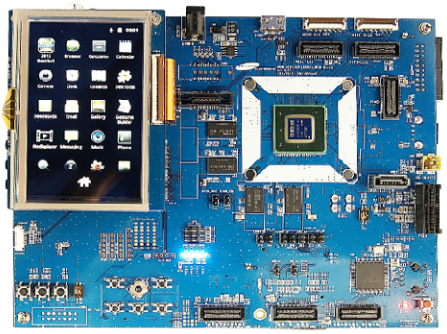

SMDKV310

- Samsung S5PV310 System Reference Board.

OVERVIEW

The SMDKV310(S5PV310 Development Kit) is the official reference/evaluation board for Samsung S5PV310.
It is the basic system-based hardware design which uses the S5PV310.
It can evaluate the basic operations of the S5PV310 and assist in developing codes.

SPECIFICATION

Diagram

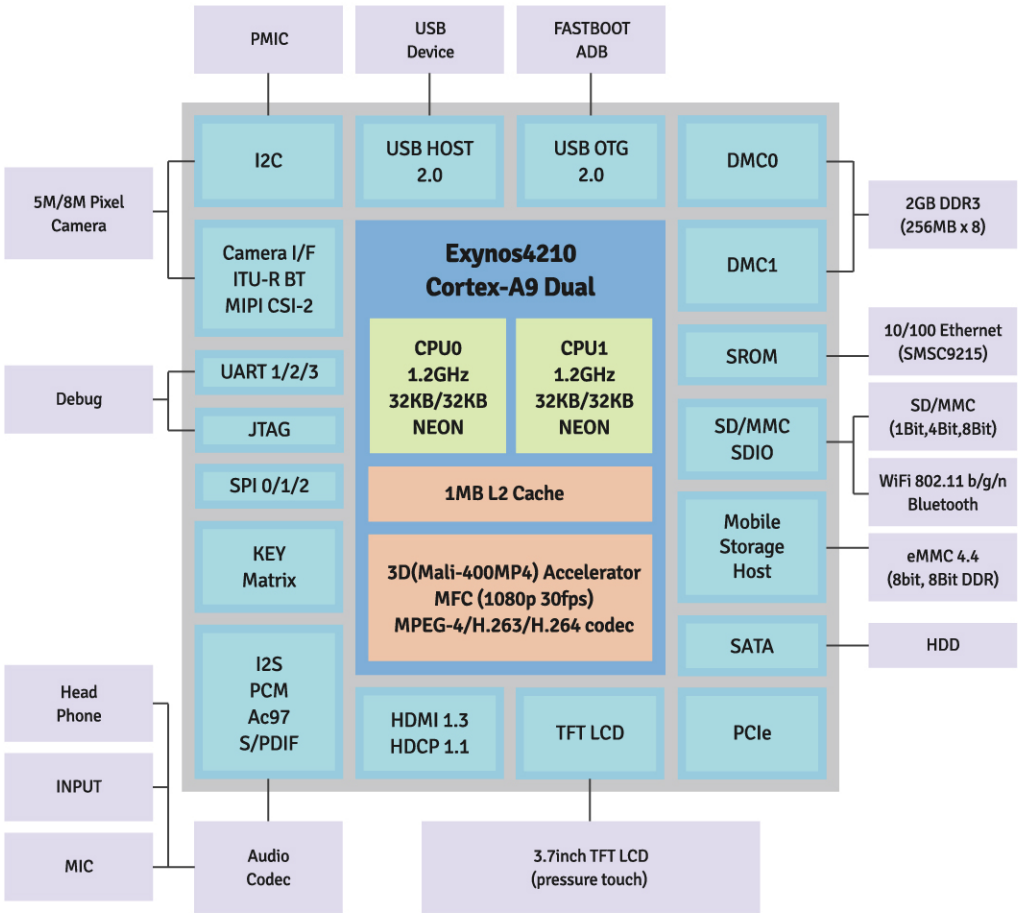

Feature

Parts		Description	Type	Num.
CPU	S5PV310	Samsung Cortex-A9(Dual)	BGA device	1
Memory (Storage)	Internal	-		
	External	2GB DDR3	On Board (256MBx8)	1
		8GB iNAND	On Board	1
		SD / SDIO / MMC I/F	Socket	1
		SATA	Connector	1
		NAND I/F	Connector(40pin Samtec)	1
COM	USB	USB 2.0 OTG	Socket	1
		USB 2.0 Host	Socket	1
	Serial	RS232	9pin Female	1
			3pin Female	1
	Ethernet	LAN9215 (10/100Mbps)	RJ45 JACK (Combo)	1
	Wifi/BT	WIFI/BT I/F	Connector (40pin Samtec)	1
	PCIe	-	Connector	1
Modem I/F	Modem I/F	MSM	Connector	1
LCD&Touch	TFT LCD & Touch	3.7 or 10.1 Inch TFT LCD	LCD module	1
		Dual Interface	Connector	2
Multimedia	Audio	S/PDIF 5.1 Audio, MIC, Line In, Headphone (WM9713G, WM8994)	JACK	4
	Video	HDMI 1.3 Video	JACK	1
		TV Out (Composit)	JACK	1
	Camera I/F	General Camera I/F	Connector	1
	MIPI I/F	MIPI-CSI	Connector	2
		MIPI-DSI	Connector	2
	SPI	High Speed SPI	Header	3
Others	ENIT	External INT Test point	Test Point	32
	HSIC	HSIC	Connector	4
	SLIM	SLIM BUS	Header	1
	Sensor	-	Connector	1
	GPS	-	Connector(40pin Samtec)	1
	Key	Jog stick	TACK key	1
		Querty_Key I/F	Connector	1
		Extended Key I/F	Connector	1
	Button	Power, Reset, Int, ..	button	9
	Debug Port	JTAG 10x2	Box Header	1
	Status LEDs	LEDs	LED	8

Layout

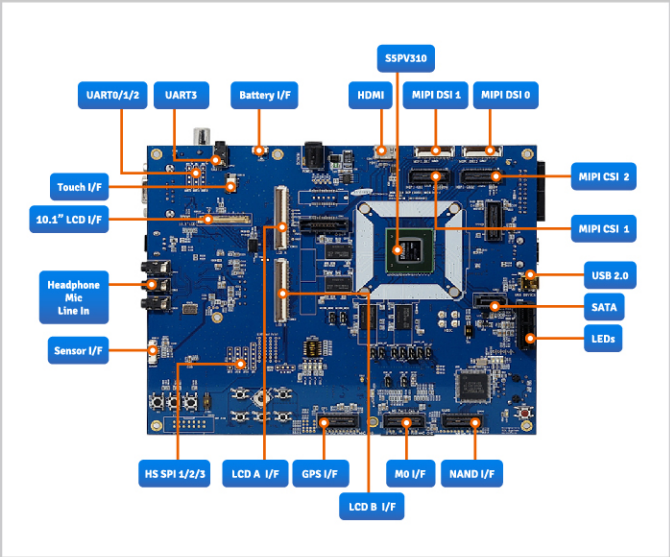

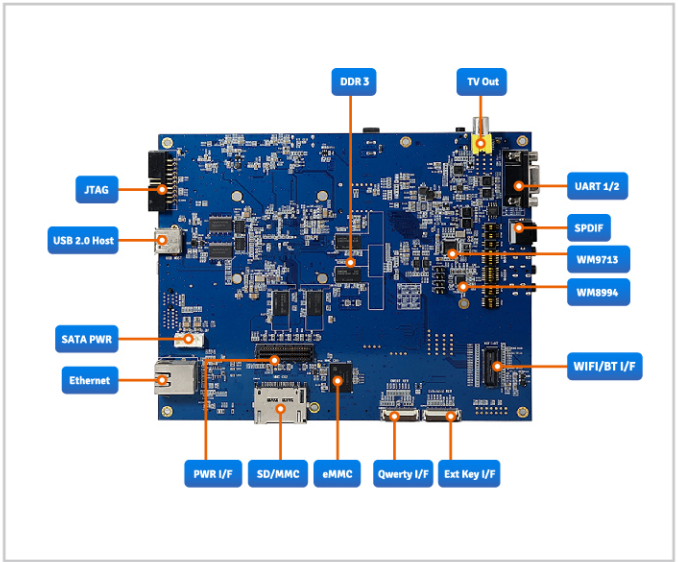

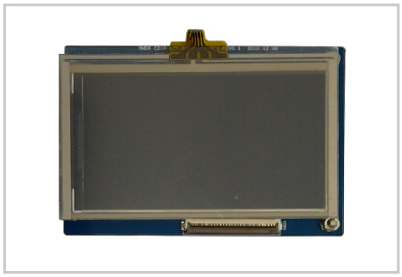

PACKAGE

Parts	Description	Num.
Main Board	S5PV310 Board	1
LCD Board	3.7 inch with Touch	1
Power Adapter	5V DC / 3A	1
Cable	9pin serial cable(Male/Female)	1
	3pin serial cable	1
	USB2.0 A/M to mini B/M	1
	Ethernet Cable	1
Memory	4GB SDHC	1
CD *note 1)	Setup Guide, Utility, Files	1

note 1)

Anroid Image is include in the CD but No BSP.
You should contact the Samsung Distributor to get the BSP (NDA with Samsung required).

Accessory



9pin serial cable (Male/Female)



Ethernet Cable



3pin serial cable



USB 2.0 A/M
to mini B/M cable



Power Adapter



SD Card

PURCHASE

sales@yicsystem.com

A/S information

Warranty Period

Emulator / Board

- Emulator : 12 Months
- Board : 6 Months
- Within in the warranty period : Free of charge
- Later than the warranty period : provide a quotation for the repair cost

YIC System shall not be liable in respect of defects in the product arising from (a) Customer error or neglect in its use or storage of the product (b) Any modification of the product made by anyone other than YIC System (c) The use of the product is combination with other equipment, software or technology not purchased or licensed from YIC System, provided that such defects would not have occurred but for such combination, modification or enhancement.

Accordingly, if upon customer's return of faulty product, it is clear that the fault has arisen out of one or more of the above set of circumstances, then YIC System reserves the rights to change the full price of any replacement unit.

A/S Procedure

Before returning the product to YIC System, the customer should contact the YIC System and provide information as below.

a) A fault description
b) The product serial number

A/S information

If you have any inquiries during using our product,
please contact us by e-mail or telephone.

Address
441-814 Gyeonggi Small & Medium Business
Growth Accelerating Center 3F,
111-7 Guun-dong, Gwonseon-gu, Suwon-city,
Gyeonggi-do, Korea

E-mail sales@yicsystem.com
Tel +82-31-278-0461
Fax +82-31-278-0463

Smile with you.