The world class safety

SVD-1100











MODERN&ELEGANT
LIBRARY-STYLE VAULT DOOR

SHIN JIN
SAFE-TECH

Stainless Steel Swing Vault Door

SVD-1100 Vault door

A very slight difference makes a striking technological difference!

This library-style swing vault door SVD-1100 is small size, but has same functions as that of big vault doors. This vault door does not have a doorsill for the convenience. This very slight difference is the very expression of SHINJIN's technology policy for customer satisfaction.

Features

- Outside finishing : stainless steel or painting. (Color optional)
- Crossbar latch : Stainless steel circular bar, concealed locking system.
- Design : "Modern & Elegant", Ni-Cr coated round handle gives you smooth-touch and modern exterior view.

Options



Time lock

UL listed time lock with three movements.

Ventilator & Alarm

Air circulation and emergency alerts.







or



Daygate

The door can be fitted with Daygate, grilled type for day time use.

- Light Control : Micro-switch is fitted into the hinge to control internal lighting when door is open/close.
- Enhanced latch : Modularized 5-step safety device. (safety upgrade)

Materials

Outside	Inside	Protective layer
Stainless steel or Painting	Steel plate	Special concrete or Fire-rated material

(ex. Fiber glass wool etc.)

Size

Weight(kg)	Frame Size			Door Size		
	W	H	D	W	H	D
650	1200	2020	300	900	1850	170

(Unit : mm)

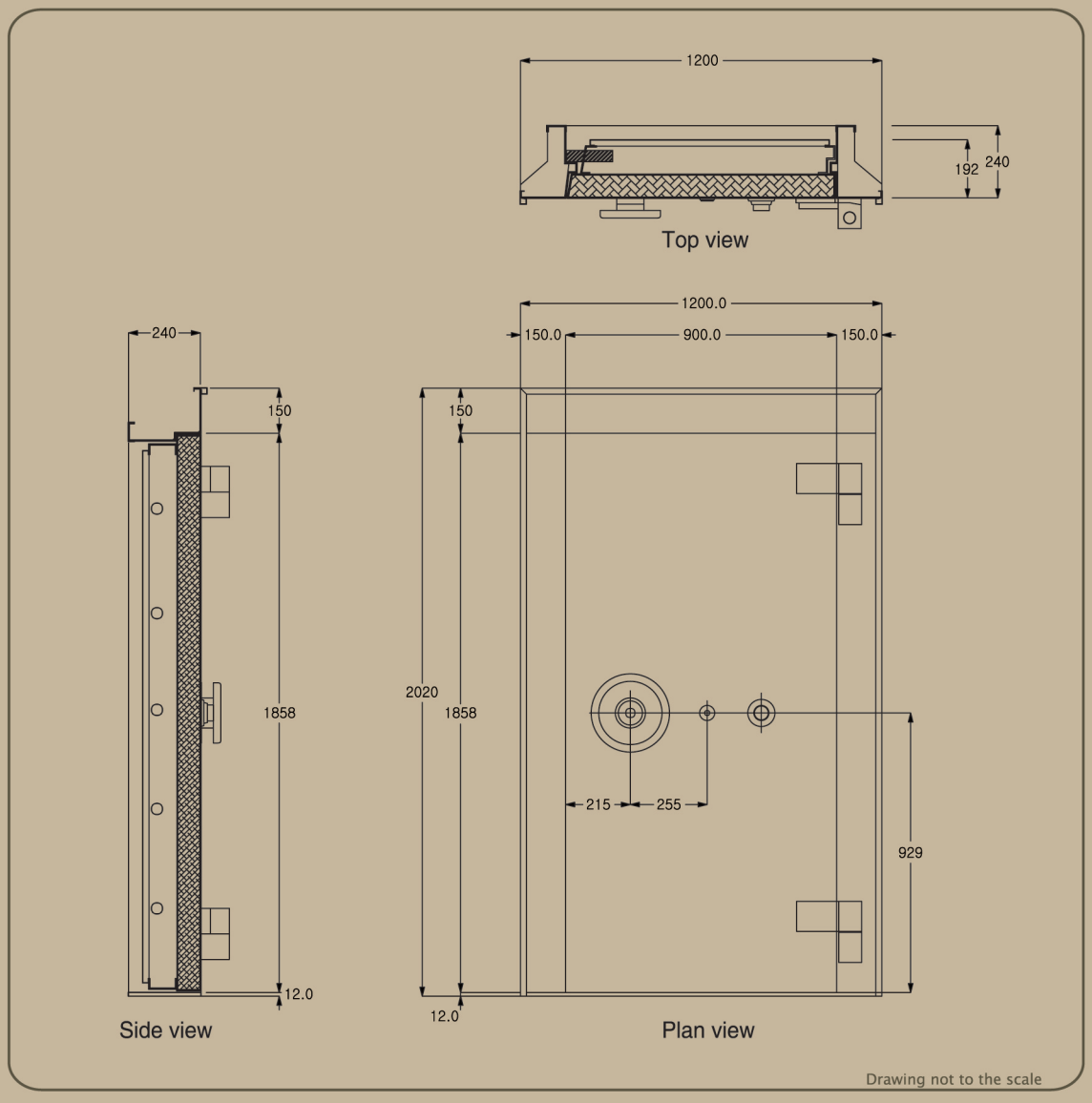

SMALL, BUT PERFECT FUNCTIONS AND PERFORMANCE !

LIBRARY-STYLE SWING VAULT DOOR !

Copyright© 2010.12 By SHINJIN SAFE TECH Co.,Ltd.All rights reserved.

www.shinjinsafe.co.kr

SHINJIN SAFE-TECH

Head office
11Block 7Lot, 772-2, Wonsi-Dong Danwon-Gu
Ansan-Si Gyeonggi-Do, Korea
Tel. +82.31.497.8833 | Fax. +82.31.497.0414

Branch office
3Na-111, Sihwa Ind. 1269-10, Jungwang-Dong
Siheung-Si Gyeonggi-Do, Korea
Tel. +82.31.497.8012~3 | Fax. +82.31.319.1027

Seoul office
7F Myung-dong ArtnouveaucentumB/D 711
Euljiro-2ga Jung-gu Seoul 199-39, Korea
Tel. +82.2.2267.8833 | Fax. +82.2.2277.0841