Loudspeaker Specification Sheet

Model Number : BH13A010

Revision : Rev 00.
Date : 05.JUN.17

Features:

- Driver Type : Woofer
- Size : 150mm (6inch)
- Magnet : Ferrite
- Frame : Steel
- Diaphragm : Silver Paper



Specifications:

- Rated Power Handling : 40W (RMS)
- Characteristic Sensitivity : 95dB ± 2dB (1W/1m)
- Nominal Impedance : 10Ω
- Free Air Resonance Frequency, fs : 85Hz ± 20%
- Frequency Range : fs ~ 10kHz ± 20%
- Voice Coil Inner Diameter : Ø25.4 (mm)
- Net Weight : 1350g (47.6oz)

Dimensions & Mounting Information:

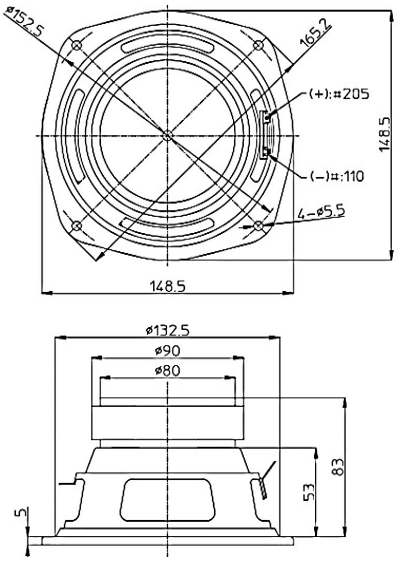

Frequency & Impedance Response:

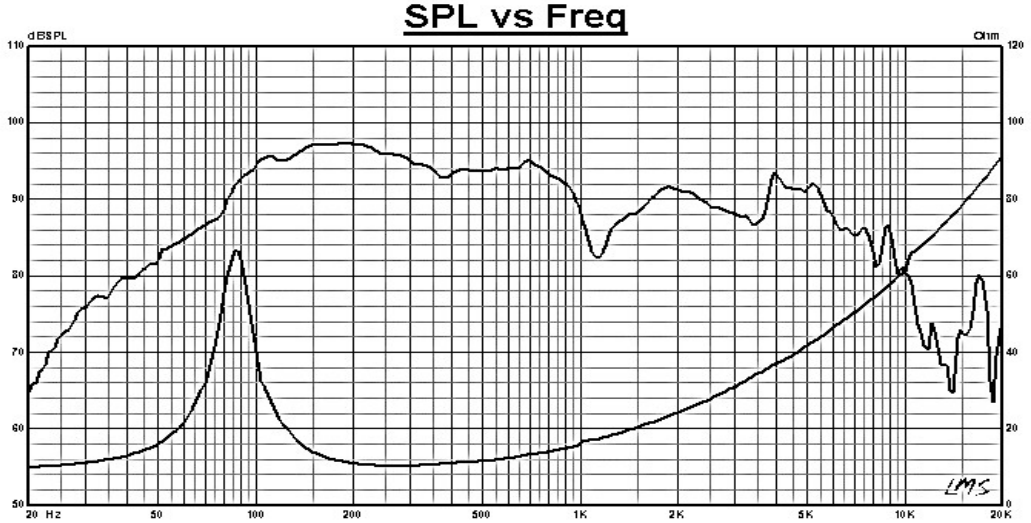

http://www.bhacoustic.com
105, Sinwon-ro, Yeongtong-gu, Suwon-si, Gyeonggi-do, Republic of Korea 16678
Tel : +82(31)-206-5477 Fax : +82-(21)-206-5473