Separated Converter Type LED Lighting Fixtures

CELE SERIES

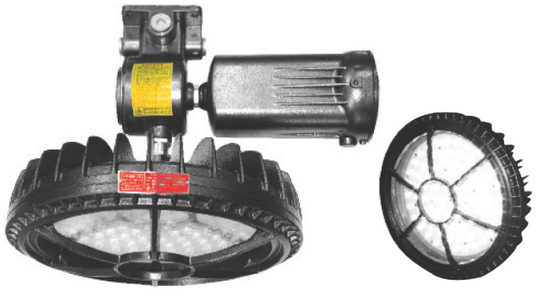

Application sectors



Technical Data

구 분		SEBP-CELE-100	SEBP-CELE-120	SEBP-CELE-140	SEBP-CELE-160	SEBP-CELE-180	SEBP-CELE-200
전기사양	소비전력 (W)	100W	120W	140W	160W	180W	200W
	정격전압 (V)	220V	220V	220V	220V	220V	220V
	역율 (%)	95이상	95이상	95이상	95이상	95이상	95이상
	전원효율 (%)	85이상	85이상	85이상	85이상	85이상	85이상
광사양	전광속 (lm)	10,000	12,000	14,000	16,000	18,000	20,000
	연색성 (CRI)	75이상					
	광효율 (lm/W)	100이상					
	색온도 (K)	5700K~6500K					
수명 (시간)		30,000이상					
사용주위온도(℃)		-20℃ ~ +40℃					
용량 · 등급		Ex d IIC T6 IP66 / Ex tD A21 IP66 T85℃					

Photometric Data

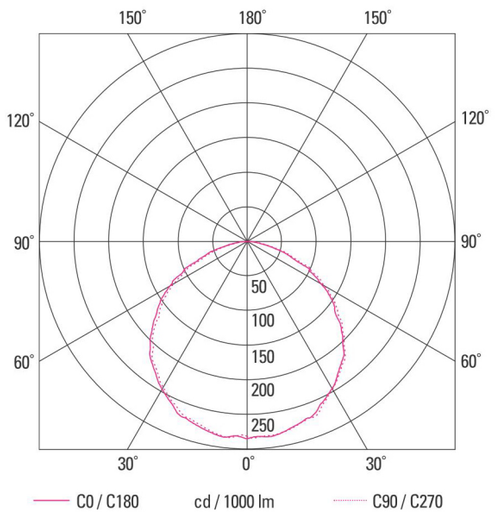

Description

· Body : Die-casting aluminium
· Smps Box : Die-casting aluminium
· Globe : Tempered glass
· Mounting Box : Die-casting aluminium
· Gasket : Silicone gasket
· Bolts and screws : Stainless steel
· Coating : Epoxy coating
· Entries : PF3/4" threads

Compliance

Notification of Ministry of Labor No.2013-54

Dimension

Ceiling Type



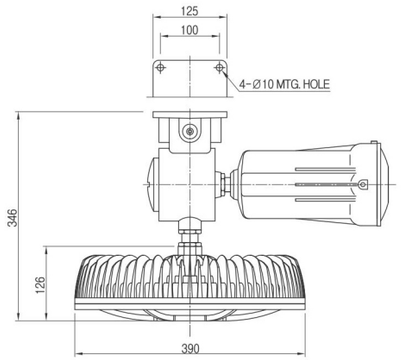

Pendant Type



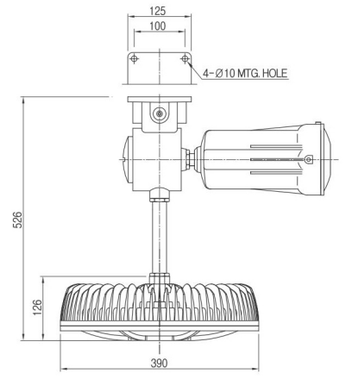

40° Bracket Type



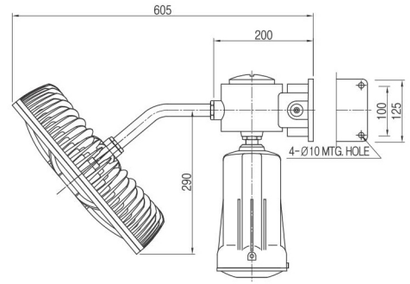

90° Bracket Type



