## STANDARD EQUIPMENT

ISO standard cabin
·Cabin ROPS(ISO 3471)
TOPS(ISO 12117)
FOPS(ISO 3449)
FOG(ISO 10262 Level I)
·All-weather steel cab with all-around visibility
·Safety glass windows
·Sliding fold-in front window
·Sliding side window
·Lockable door
·Accessory box
·Centralized monitoring
·Gauges
Fuel level gauge
Engine coolant temperature gauge
·Warning
Engine oil pressure
Engine coolant temperature
Preheat
Low battery
Air cleaner closing
Fuel empty
·Door and locks, one key
·Radio / USB player
·Mechanical suspension seat with seat belt
·Console box tilting system(LH.)
·Two front working lights
·Electric horn
·Battery (1 x 12 V x 80 AH)
·Battery master switch
·Automatic swing brake
·Removable reservoir tank
·Water separator, fuel line
·Mono boom (2.03 m, 6' 5")
·Arm (1.12 m, 3'8")
·Rubber crawler (300 mm, 10")
·Single acting piping (Breaker, etc)
·Double acting piping (Clamshell, etc)

## OPTIONAL EQUIPMENT

ISO standard canopy
·Canopy ROPS(ISO 3471)
FOPS(ISO 3449)
FOG(ISO 10262 Level I)
TOPS(ISO 12117)
·Beacon lamp
·Accumulator, work equipment lowering
·Travel alarm
·Quick coupler
·Tool kit
·Long Arm (1.35m, 4'5")
·Heater & Defroster
·Lever pattern change valve
·Additional CWT
·Proportional control suitor
·Proportional control switch
-RCV with Proportional Control Switch
-Rotating Piping
-Boom & Arm Safety Lock Valve

* Standard and optional equipment may vary. Contact your Hyundai dealer for more information. The machine may vary according to International standards.
* The photos may include attachments and optional equipment that are not available in your area.
* Materials and specifications are subject to change without advance notice.
* All imperial measurements rounded off to the nearest pound or inch.

**PLEASE CONTACT**

www.hyundai-ce.com 2016. 12 Rev.2


HYUNDAI HEAVY INDUSTRIES | CONSTRUCTION EQUIPMENT

**Head Office** (Sales Office)
75, YULGOK-RO, JONGNO-GU, SEOUL 03058, KOREA
**TEL**: (82) (2) 746–7660

**Americas Operation : Hyundai Construction Equipment Americas, Inc.**
6100 ATLANTIC BOULEVARD NORCROSS GA 30071 U.S.A **TEL**: (1) 847-678-823-7802 **FAX**: (1) 847-678-823-7778

**Europe Operation : Hyundai Heavy Industries Europe N.V.**
VOSSENDAAL 11, 2440 GEEL, BELGIUM **TEL**: (32) 14-56-2200 **FAX**: (32) 14-59-3405


Robex

# 30Z-9AK

With Tier 4 Final Engine installed

MOVING YOU FURTHER

HYUNDAI HEAVY INDUSTRIES




*Photo may include optional equipment.

HYUNDAI HEAVY INDUSTRIES

# PRIDE AT WORK

Hyundai Heavy Industries strives to build state-of-the art earthmoving equipment to give every operator maximum performance, more precision, versatile machine preferences, and proven quality.
***Moving you further !***

Robex 30Z-9AK



*Photo may include optional equipment.

## Machine Walk-Around

### Engine Technology
Proven, reliable, fuel efficient, low emission and low noise
Kubota Tier 4 final.

### Rugged Upper and Lower Frame
The upper frame is designed to be heavy duty to absorb high stress load on the job. X-leg center frame and reinforced box section track frame provide exceptional strength and longer service life to withstand tough working conditions.

### Efficient Control System
Control devices are all conveniently located for improved operator comfort and productivity.
A safety lever on the left-side console is designed to prevent exiting the cabin while hydraulic controls are live.

### Advanced Hydraulic System
The R30Z-9AK hydraulic system is precision designed for fast operation with fine control capabilities.

### Comfortable and Durable Cabin
The cabin is roomy and ergonomically designed, with reduced sound levels and good visibility. Both canopy and cabin style frames meet international standards TOPS, ROPS, FOPS ensuring operator's safety.

### Operator Convenience
The R30Z-9AK features a suspension seat, pedals for added space and multiple storage compartments.
The monitoring system includes seven warning indicators, water temperature gauge, fuel gauge and hour meter for productive, convenient operating.

### Easy and Simple Maintenance
An adjustable suspension seat, wrist rests, ergonomically designed joysticks and plenty of leg room help to reduce operator fatigue. A array of indicators and gauges are displayed on the monitor which keep the operator aware of machine performance at all times. The monitoring system includes seven warning indicators, water temperature gauge, fuel gauge and hour meter.

### Extended Life of Components
The R30Z-9AK reduces operating costs over time with long life hydraulic filters, hydraulic oil, shims and bushings.

# PRECISION

Innovative hydraulic system technologies make the 9A series excavator fast, smooth and easy to control.




*Photo may include optional equipment.

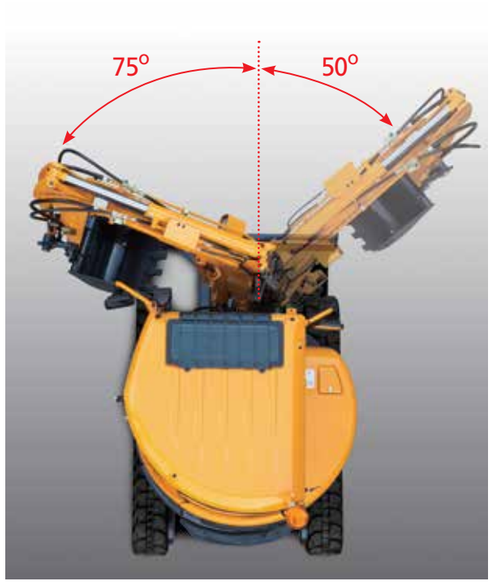


## Boom Swing

The R30Z-9AK's boom swing function is designed for efficient work in congested residential and urban areas. The boom can be offset left or right within an operating range.



## Dozer Blade

Large dozer blade provides added versatility, work efficiency and stability for the job.



## Auto Shift Traveling System

During high-speed traveling, travel motor speed decreases automatically when subjected to heavy load, and resumes when the load reduces.




## Zero-tail Swing

R30Z-9AK's short tail swing radius allows the operator work in confined areas like close to buildings on roadways, and in urban areas. This compact radius design provides easy and efficient operation in any limited space work environment.



## Lever Pattern Change Valve

Joystick control patterns can be changed though an optional pattern change valve positioned for easy access.

# PERFORMANCE

9A series is designed for maximum performance to keep the operator working productively.




*Photo may include optional equipment.



## Cylinder Covers

Standard boom and dozer cylinder covers provide added protection.




## Structure Strength

The R30Z-9AK cabin structure has been fitted with stronger but slimmer tubing for added safety and improved visibility. Low-stress, high strength steel is integrally welded to form a stronger, more durable upper and lower frame. Structural integrity was tested by way of FEM (Finite Elements Method) analysis and long-term durability tests.

## Kubota D1305

Emissions: The most compact multi-cylinder liquid cooled industrial diesel engines comply with EPA Tier 4 Emission regulations without additional After Treatment Tools. This engine meets standards over the NRTC and NTE requirements.

Lower Noise Level: The half-float valve cover and MoS2 coated piston reduce noise levels and vibration.



# PREFERENCE

Operating a 9A series is unique to every operator. Operators can fully customize their work environment and operating preferences to fit their individual needs.

*Photo may include optional equipment.




**Monitor**

The monitoring system of the R30Z-9AK provides the operator with machine status information, including: engine oil pressure lamp, battery charge lamp, engine coolant temperature and a fuel gauge.

## Comfortable Operating Cabin

In a 9A series cabin, you can easily adjust the seat and wrist rests settings to best suit your preferred operating condition.

1. All pedals are for additional floor space.  Foot rest, attachment pedal, left and right travel pedals and boom swing pedal are arranged for convenient access.
2. Two cup holders are integrated into the right console for large and small drink storage.
3. An additional storage box with key lock is accessible under the operator's seat.
4. Adjustable wrist rests provide additional comfort.
5. A sliding fold-in front window is easily opened and safely stored in an open position to improve ventilation and visibility.(Cabin type only)






## Reduced Stress

An operator's work environment should be stress free. Hyundai's R30Z-9AK compact excavator is designed for comfort, reduced sound and plenty of space to reduce stress on the operator.

## Operator Comfort

The left and right control levers are ergonomically located for convenient access.
A safety lock system is designed to prevent exiting the cabin while hydraulic controls are live. When the safety lever and left side console are positioned upright, hydraulic functions are disengaged.



A tiltable left-side console make the operator easier to enter and exit the cab.



# PROFITABILITY

9A series is designed to maximize profitability through improved efficiencies, enhanced service features and longer life components.




*Photo may include optional equipment.



## Easy Change Air Cleaner

The R30Z-9AK is equipped with a durable plastic air cleaner designed for easy maintenance.



## Selector Valve for Single or Double Acting Piping

Double Acting Pipe located on front of the Fuel Tank for easy to access and control.

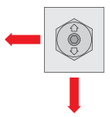

Lever direction
Vertical : Single acting piping (Breaker)
Horizontal : Double acting piping (clamshell)




## Centralized Grease Fittings

A centralized lubrication bank is available for faster, easier service and maintenance.



## Easy Access

The R30Z-9AK was built with accessibility in mind. All doors, covers and hoods were built for complete open access. Regular service and maintenance is easy and convenient with the R30Z-9AK.



## Proportional Auxiliary Hydraulic System

-Opt: Proportional Control Switch for better speed control
-Enlarge the Operation Convenience




## Long-Life Components

9A series excavators were designed with bushings designed for long-life lube intervals (250 hrs) & polymer shims (wear resistant, noise reducing), long-life hydraulic filters (1,000hrs), long-life hydraulic oil (5,000hrs), more efficient cooling systems and integrated preheating systems which extend service intervals, minimize operating costs and reduce machine down time.

# Specifications

## ENGINE

| | | |
|---|---|---|
| MODEL | | Kubota D1305 |
| Type | | 4 Cycle. In line, water cooled diesel |
| Rated flywheel horse power | | |
| SAE | J1995 (gross) | 24.9 HP (18.1 kW) at 2,350 rpm |
| | J1349 (net) | 23.2 HP (17.3 kW) at 2,350 rpm |
| DIN | 6271/1 (gross) | 25.2 PS (18.5 kW) at 2,350 rpm |
| | 6271/1 (net) | 23.5 PS (17.3 kW) at 2,350 rpm |
| Max. torque | | 8.3 kgf·m(60.17 lbf·ft) at 1,600 rpm |
| Bore X stroke | | 78 mm x 88 mm (3.07" x 3.46") |
| Piston displacement | | 1,261 cc (76.9 in³) |
| Batteries | | 12V - 80 AH |
| Starting motor | | 12V - 1.4 kW |
| Alternator | | 12V - 40 A |

## HYDRAULIC SYSTEM

| MAIN PUMP | |
|---|---|
| Type | variable displacement piston pumps |
| Rated flow | 2 x 27.6 + 19.6 L/min |
| Sub-pump for pilot circuit | Gear pump |

Cross-sensing and fuel saving pump system

| HYDRAULIC MOTORS | |
|---|---|
| Travel | Two speed axial piston motor with counter balance valve and parking brake |
| Swing | Axial piston motor with automatic brake |

| RELIEF VALVE SETTING | |
|---|---|
| Implement circuits | 220 Kgf/cm² (3,130 psi) |
| Travel circuit | 220 Kgf/cm² (3,130 psi) |
| Swing circuit | 175 Kgf/cm² (2,489 psi) |
| Pilot circuit | 30 Kgf/cm² (430 psi) |
| Service valve | Installed |

| HYDRAULIC CYLINDERS | |
|---|---|
| No. of cylinder bore X stroke | Boom: 75 X 565 mm (3.0" x 22.2") |
| | Arm: 70 X 500 mm (2.8" x 19.7") |
| | Bucket: 60 x 420 mm ( 2.4" x 16.5") |
| | Boom swing: 75 X 400 mm (3.0" x 15.7") |
| | Dozer blade: 95 X 140 mm (3.7"x 5.5") |

## NOISE LEVEL (CAB)

| NOISE LEVELS (DYNAMIC VALVE) | |
|---|---|
| LwA | 94 dB |
| LpA | 75 dB |

## COOLANT & LUBRICANT CAPACITY

| (Refilling) | liter | US gal | UK gal |
|---|---|---|---|
| Fuel tank | 30 | 7.9 | 6.6 |
| Engine coolant | 5.0 | 1.1 | 0.9 |
| Engine oil | 5.9 | 1.6 | 1.3 |
| Hydraulic tank | 27 | 7.1 | 5.9 |

## TRAVEL LEVERS

Traveling and steering : Two levers with pedals.

## CONTROL LEVERS

| TYPE | |
|---|---|
| Pilot control | Two joysticks with one safety lever (LH): Swing and arm, (RH): Boom and bucket with horn (ISO) |
| Engine throttle | Mechanical, cable type |

## SWING SYSTEM

| | |
|---|---|
| Swing motor | Axial piston motor |
| Swing reduction | Planetary gear reduction |
| Swing bearing lubrication | Grease-bathed |
| Swing brake | Wet disc |
| Swing speed | 9.1 rpm |

## DRIVES & BRAKES

| | |
|---|---|
| Max. travel speed(high) / (low) | 4.4 km / 2.4 km (2.8 mph) / (1.5 mph) |
| Maximum traction force | 2.4 ton |
| Maximum gradeability | 30 ° |
| Parking brake | Wet disc |

## DIGGING FORCE (ISO)

| | |
|---|---|
| Bucket | 2,050 kgf |
| | 20.1 kN |
| | 4,520 lbf |
| Arm [Long Arm] | 1,400 [1,265] kgf |
| | 13.7 [12.4] kN |
| | 3,090 [2,790] lbf |

## WEIGHT(APPROXIMATE)

Operating weight including Cabin, 2,030mm (6' 8") boom, 1,120mm (3' 8") arm, SAE heaped 0.08 m² (0.1yd³) excavator bucket, lubricant, coolant, full fuel tank, hydraulic tank and operator (75kg)

| Shoe Width | | Rubber shoe 300 mm (10") | Steel shoe 300mm (Option) |
|---|---|---|---|
| Operating Weight | Cabin | 2,930 Kg ( 6,460 lb) | 3,030 Kg (6,680 lb) |
| | Canopy | 2,820 Kg (6,220 lb) | 2,920 Kg (6,440 lb) |
| Option Weight | Quick coupler | +46 Kg (101 lb) | +46 Kg (101 lb) |
| | canopy | -110 Kg (243 lb) | -110 Kg (243 lb) |
| | additional counter weight | +130Kg (287 lb) | +130Kg (287 lb) |
| Ground Pressure | Cabin | 0.29 kg / cm² (4.12 psi) | 0.28 kg / cm² (3.88 psi) |
| | Canopy | 0.27 kg / cm² (3.84 psi) | 0.27 kg / cm² (3.84 psi) |

## UNDERCARRIAGE

X-leg type center frame is integrally welded with reinforced box-section track frames. The undercarriage includes lubricated rollers, track adjusters with shock absorbing springs and sprockets, and rubber shoes.

| | |
|---|---|
| Center frame | X - leg type |
| Track frame | Pentagonal box type |
| No. of carrier roller on each side | 1 |
| No. of track roller on each side | 3 |

# Dimensions & Working Range

## R30Z-9AK DIMENSIONS

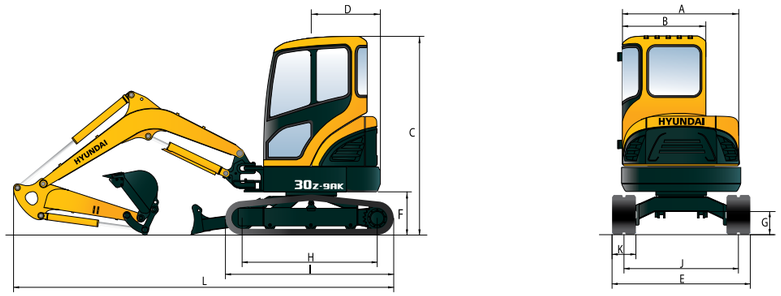





unit: mm (ft·in)

| | | | | | |
|---|---|---|---|---|---|
| **A** | Overall width of upper structure | 1,485 (4' 10") | **G** | Ground clearance | 290 (11") |
| **B** | Overall width of cab | 1,050 (3' 5") | **H** | Tumbler distance | 1,550 (4' 11") |
| **C** | Overall height of cab | 2,500 (8' 2") | **I** | Track length | 1,970 (6' 6") |
| **D** | Tail swing radius<br>With additional counterweight | 775 (2' 7")<br>875 (2' 10") | **J** | Track gauge | 1,250 (4' 1") |
| | | | **K** | Track shoe width | 300 (1' 0") |
| **E** | Overall width | 1,550 (5' 1") | **L** | Overall length<br>Long Arm | 4,180 (13' 9")<br>4,220 (13' 10") |
| **F** | Clearance under counterweight | 510 (1' 67") | | | |

## R30Z-9AK WORKING RANGE

unit: mm (ft·in)

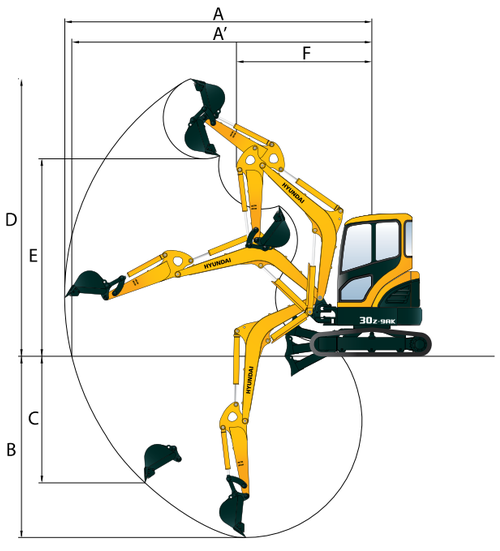


| | | |
|---|---|---|
| | Boom length | 2,030 (6' 8") |
| | Arm length | 1,120 (3' 8")<br>*1,350 (4' 5") |
| **A** | Max. digging reach | 4,650 (15' 3")<br>*4,860 (15' 11") |
| **A'** | Max. digging reach at ground | 4,515 (14' 10")<br>*4,735 (15' 6") |
| **B** | Max. digging depth | 2,500 (8' 2")<br>*2,720 (8' 11") |
| **C** | Max. vertical wall digging depth | 2,085 (6' 10")<br>*2,310 (7' 7") |
| **D** | Max. digging height | 4,270 (14' 0")<br>*4,405 (14' 5") |
| **E** | Max. dumping height | 2,890 (9' 6")<br>*3,030 (9' 11") |
| **F** | Min. swing radius | 2,055 (6'9")<br>*2,090 (6'10") |

* Long Arm

# Specifications

## LIFTING CAPACITY R30Z-9AK

Rating over-front  Rating over-side or 360 degree

Boom : 2.03 m (6′ 5″) / Arm : 1.12 m (3′ 8″) / Bucket : 0.08 m³ SAE heaped / Dozer Down : 250mm (9.8″) Rubber track Cabin Type. W/O ADD CWT

| Load point height m (ft) | | Life-point radius | | | | | | | | At max. reach | | |
|---|---|---|---|---|---|---|---|---|---|---|---|---|
| | | 2.0 m (6.6 ft) | | 2.5 m (8.2 ft) | | 3.0 m (9.8 ft) | | 3.5 m (11.5 ft) | | Capacity | | Reach |
| | | | | | | | | | | | | m (ft) |
| 3.5 m | kg | | | | | | | | | *720 | 670 | 2.64 |
| (11.5 ft) | lb | | | | | | | | | *1580 | 1490 | (8.6) |
| 3.0 m | kg | | | | | *690 | 550 | | | *620 | 500 | 3.20 |
| (9.8 ft) | lb | | | | | *1520 | 1220 | | | *1360 | 1090 | (10.5) |
| 2.5 m | kg | | | | | *690 | 550 | *700 | 430 | *580 | 420 | 3.55 |
| (8.2 ft) | lb | | | | | *1520 | 1210 | *1540 | 940 | *1280 | 920 | (11.7) |
| 2.0 m | kg | | | *830 | 720 | *760 | 540 | *730 | 420 | *570 | 370 | 3.78 |
| (6.6 ft) | lb | | | *1830 | 1590 | *1680 | 1190 | *1610 | 940 | *1260 | 830 | (12.4) |
| 1.5 m | kg | | | *1060 | 700 | *880 | 530 | *780 | 420 | *580 | 350 | 3.91 |
| (4.9 ft) | lb | | | *2350 | 1540 | *1930 | 1160 | *1720 | 920 | *1280 | 770 | (12.8) |
| 1.0 m | kg | | | *1300 | 670 | *1000 | 510 | *840 | 410 | *610 | 340 | 3.95 |
| (3.3 ft) | lb | | | *2870 | 1480 | *2210 | 1130 | *1860 | 900 | *1330 | 750 | (13.0) |
| 0.5 m | kg | | | *1460 | 650 | *1100 | 500 | *900 | 400 | *650 | 340 | 3.91 |
| (1.6 ft) | lb | | | *3220 | 1440 | *2420 | 1110 | *1970 | 890 | *1440 | 760 | (12.8) |
| Ground | kg | *1550 | 980 | *1510 | 640 | *1140 | 490 | *910 | 400 | *740 | 360 | 3.78 |
| Line | lb | *3430 | 2150 | *3330 | 1420 | *2510 | 1090 | *2010 | 880 | *1620 | 790 | (12.4) |
| -0.5 m | kg | *2040 | 980 | *1460 | 640 | *1100 | 490 | *860 | 400 | *830 | 390 | 3.56 |
| (-1.6 ft) | lb | *4490 | 2150 | *3220 | 1420 | *2450 | 1090 | *1900 | 880 | *1830 | 860 | (11.7) |
| -1.0 m | kg | *1780 | 980 | *1310 | 650 | *980 | 500 | | | *850 | 450 | 3.21 |
| (-3.3 ft) | lb | *3930 | 2170 | *2880 | 1420 | *2160 | 1090 | | | *1870 | 1000 | (10.5) |
| -1.5 m | kg | *1340 | 1000 | *960 | 660 | | | | | *830 | 600 | 2.66 |
| (-4.9 ft) | lb | *2950 | 2200 | *2110 | 1450 | | | | | *1840 | 1330 | (8.7) |

Boom : 2.03 m (6′ 5″) / Arm : 1.12 m (3′ 8″) / Bucket : 0.08 m³ SAE heaped / Dozer Up : 250mm (9.8″) Rubber track Cabin Type. W/O ADD CWT

| Load point height m (ft) | | Load radius | | | | | | | | At max. reach | | |
|---|---|---|---|---|---|---|---|---|---|---|---|---|
| | | 2.0 m (6.6 ft) | | 2.5 m (8.2 ft) | | 3.0 m (9.8 ft) | | 3.5 m (11.5 ft) | | Capacity | | Reach |
| | | | | | | | | | | | | m (ft) |
| 3.5 m | kg | | | | | | | | | *720 | 680 | 2.64 |
| (11.5 ft) | lb | | | | | | | | | *1580 | 1490 | (8.6) |
| 3.0 m | kg | | | | | 590 | 560 | | | 530 | 500 | 3.20 |
| (9.8 ft) | lb | | | | | 1300 | 1220 | | | 1160 | 1100 | (10.5) |
| 2.5 m | kg | | | | | 590 | 550 | 450 | 430 | 440 | 420 | 3.55 |
| (8.2 ft) | lb | | | | | 1300 | 1220 | 1000 | 950 | 980 | 930 | (11.7) |
| 2.0 m | kg | | | 780 | 720 | 580 | 550 | 450 | 430 | 400 | 380 | 3.78 |
| (6.6 ft) | lb | | | 1720 | 1600 | 1280 | 1200 | 990 | 950 | 880 | 830 | (12.4) |
| 1.5 m | kg | | | 750 | 700 | 560 | 530 | 440 | 420 | 370 | 360 | 3.91 |
| (4.9 ft) | lb | | | 1660 | 1540 | 1240 | 1170 | 980 | 930 | 820 | 780 | (12.8) |
| 1.0 m | kg | | | 730 | 670 | 550 | 520 | 440 | 410 | 360 | 350 | 3.95 |
| (3.3 ft) | lb | | | 1600 | 1490 | 1210 | 1140 | 960 | 910 | 800 | 760 | (13.0) |
| 0.5 m | kg | | | 710 | 660 | 540 | 510 | 430 | 410 | 360 | 350 | 3.91 |
| (1.6 ft) | lb | | | 1560 | 1450 | 1190 | 1120 | 950 | 900 | 800 | 770 | (12.8) |
| Ground | kg | 1000 | 910 | 700 | 650 | 530 | 500 | 420 | 400 | 380 | 360 | 3.78 |
| Line | lb | 2210 | 2010 | 1540 | 1430 | 1170 | 1100 | 940 | 890 | 840 | 800 | (12.4) |
| -0.5 m | kg | 1000 | 910 | 690 | 650 | 530 | 500 | 420 | 400 | 410 | 390 | 3.56 |
| (-1.6 ft) | lb | 2210 | 2010 | 1530 | 1420 | 1160 | 1100 | 930 | 890 | 910 | 870 | (11.7) |
| -1.0 m | kg | 1010 | 920 | 700 | 650 | 530 | 500 | | | 480 | 460 | 3.21 |
| (-3.3 ft) | lb | 2230 | 2020 | 1540 | 1430 | 1170 | 1100 | | | 1070 | 1010 | (10.5) |
| -1.5 m | kg | 1030 | 930 | 710 | 660 | | | | | 650 | 610 | 2.66 |
| (-4.9 ft) | lb | 2260 | 2060 | 1570 | 1460 | | | | | 1430 | 1340 | (8.7) |

1. Lifting capacity are based on ISO 10567.
2. Lifting capacity of the Robex Series does not exceed 75% of the tipping load with the machine on firm, level ground or 87% of full hydraulic capacity.
3. The Lift- point is a bucket pivot mounting pin on the arm (without bucket mass).
4. (*) indicates the load limited by hydraulic capacity.

# Specifications

## LIFTING CAPACITY R30Z-9AK

Rating over-front  Rating over-side or 360 degree

Boom : 2.03 m (6′ 5″) / Arm : 1.35 m (4′ 5″) / Bucket : 0.08 m³ SAE heaped / Dozer Down : 250mm (9.8″) rubber track. Cabin Type. W/O ADD CWT

| Load point height m (ft) | | Load radius | | | | | | | | | | At max. reach | | |
|---|---|---|---|---|---|---|---|---|---|---|---|---|---|---|
| | | 2.0 m (6.6 ft) | | 2.5 m (8.2 ft) | | 3.0 m (9.8 ft) | | 3.5 m (11.5 ft) | | 4.0 m (13.1 ft) | | Capacity | | Reach |
| | | | | | | | | | | | | | | m (ft) |
| 3.5 m | kg | | | | | | | | | | | *550 | *550 | 2.99 |
| (11.5 ft) | lb | | | | | | | | | | | *1220 | *1220 | (9.8) |
| 3.0 m | kg | | | | | *580 | *580 | | | | | *490 | 460 | 3.48 |
| (9.8 ft) | lb | | | | | *1270 | *1270 | | | | | *1090 | 1020 | (11.4) |
| 2.5 m | kg | | | | | *590 | 590 | *630 | 460 | | | *470 | 400 | 3.80 |
| (8.2 ft) | lb | | | | | *1310 | 1300 | *1380 | 1010 | | | *1030 | 880 | (12.5) |
| 2.0 m | kg | | | | | *670 | 580 | *660 | 460 | *480 | 370 | *460 | 370 | 4.01 |
| (6.6 ft) | lb | | | | | *1480 | 1280 | *1450 | 1000 | *1050 | 810 | *1020 | 810 | (13.1) |
| 1.5 m | kg | *1230 | 1080 | *930 | 750 | *800 | 570 | *720 | 450 | *680 | 360 | *470 | 350 | 4.13 |
| (4.9 ft) | lb | *2700 | 2370 | *2050 | 1660 | *1750 | 1250 | *1590 | 990 | *1510 | 800 | *1030 | 760 | (13.5) |
| 1.0 m | kg | | | *1190 | 720 | *930 | 550 | *800 | 440 | *720 | 360 | *490 | 340 | 4.17 |
| (3.3 ft) | lb | | | *2630 | 1590 | *2050 | 1210 | *1760 | 970 | *1580 | 790 | *1070 | 740 | (13.7) |
| 0.5 m | kg | *1340 | 980 | *1390 | 700 | *1050 | 540 | *860 | 430 | *750 | 350 | *520 | 340 | 4.13 |
| (1.6 ft) | lb | *2960 | 2160 | *3070 | 1540 | *2310 | 1180 | *1900 | 950 | *1640 | 780 | *1150 | 740 | (13.5) |
| Ground | kg | *1540 | 970 | *1490 | 690 | *1120 | 530 | *900 | 420 | *620 | 350 | *580 | 350 | 4.01 |
| Line | lb | *3400 | 2130 | *3280 | 1510 | *2470 | 1160 | *1990 | 930 | *1360 | 770 | *1270 | 770 | (13.2) |
| -0.5 m | kg | *2020 | 960 | *1490 | 680 | *1130 | 520 | *900 | 420 | | | *670 | 380 | 3.80 |
| (-1.6 ft) | lb | *4450 | 2130 | *3280 | 1500 | *2480 | 1150 | *1990 | 930 | | | *1480 | 830 | (12.5) |
| -1.0 m | kg | *1930 | 970 | *1390 | 680 | *1050 | 520 | *890 | | | | *790 | 430 | 3.49 |
| (-3.3 ft) | lb | *4270 | 2140 | *3060 | 1500 | *2320 | 1150 | *1970 | | | | *1750 | 940 | (11.4) |
| -1.5 m | kg | *1590 | 980 | *1150 | 690 | *810 | 530 | | | | | *810 | 530 | 3.01 |
| (-4.9 ft) | lb | *3500 | 2160 | *2530 | 1520 | *1790 | 1170 | | | | | *1780 | 1170 | (9.9) |
| -2.0 m | kg | *900 | *900 | | | | | | | | | *750 | *750 | 2.21 |
| (-6.6 ft) | lb | *1990 | *1990 | | | | | | | | | *1650 | *1650 | (7.2) |

Boom : 2.03 m (6′ 5″) / Arm : 1.35 m (4′ 5″) / Bucket : 0.08 m³ SAE heaped / Dozer Up : 250mm (9.8″) rubber track. Cabin Type. W/O ADD CWT

| Load point height m (ft) | | Load radius | | | | | | | | | | At max. reach | | |
|---|---|---|---|---|---|---|---|---|---|---|---|---|---|---|
| | | 2.0 m (6.6 ft) | | 2.5 m (8.2 ft) | | 3.0 m (9.8 ft) | | 3.5 m (11.5 ft) | | 4.0 m (13.1 ft) | | Capacity | | Reach |
| | | | | | | | | | | | | | | m (ft) |
| 3.5 m | kg | | | | | | | | | | | *550 | *550 | 2.99 |
| (11.5 ft) | lb | | | | | | | | | | | *1220 | *1220 | (9.8) |
| 3.0 m | kg | | | | | *580 | 560 | | | | | 460 | 440 | 3.48 |
| (9.8 ft) | lb | | | | | *1270 | 1240 | | | | | 1020 | 970 | (11.4) |
| 2.5 m | kg | | | | | 590 | 560 | 460 | 430 | | | 400 | 380 | 3.80 |
| (8.2 ft) | lb | | | | | 1300 | 1230 | 1010 | 960 | | | 880 | 830 | (12.5) |
| 2.0 m | kg | | | | | 580 | 550 | 450 | 430 | 360 | 350 | 360 | 340 | 4.01 |
| (6.6 ft) | lb | | | | | 1280 | 1210 | 1000 | 950 | 800 | 760 | 800 | 760 | (13.1) |
| 1.5 m | kg | 1110 | 1010 | 760 | 710 | 570 | 530 | 440 | 420 | 360 | 340 | 340 | 330 | 4.13 |
| (4.9 ft) | lb | 2450 | 2220 | 1680 | 1560 | 1250 | 1180 | 980 | 930 | 790 | 760 | 750 | 720 | (13.5) |
| 1.0 m | kg | | | 730 | 680 | 550 | 520 | 440 | 410 | 350 | 340 | 330 | 320 | 4.17 |
| (3.3 ft) | lb | | | 1610 | 1500 | 1210 | 1140 | 960 | 910 | 780 | 740 | 730 | 700 | (13.7) |
| 0.5 m | kg | 1010 | 910 | 710 | 660 | 540 | 500 | 430 | 400 | 350 | 330 | 330 | 320 | 4.13 |
| (1.6 ft) | lb | 2220 | 2020 | 1560 | 1450 | 1180 | 1110 | 940 | 890 | 770 | 730 | 730 | 700 | (13.5) |
| Ground | kg | 990 | 900 | 690 | 640 | 530 | 500 | 420 | 400 | 350 | 330 | 340 | 330 | 4.01 |
| Line | lb | 2190 | 1990 | 1530 | 1420 | 1160 | 1090 | 930 | 880 | 760 | 730 | 760 | 730 | (13.2) |
| -0.5 m | kg | 990 | 900 | 690 | 640 | 520 | 490 | 420 | 400 | | | 370 | 350 | 3.80 |
| (-1.6 ft) | lb | 2180 | 1980 | 1510 | 1410 | 1150 | 1080 | 920 | 870 | | | 820 | 780 | (12.5) |
| -1.0 m | kg | 1000 | 900 | 690 | 640 | 520 | 490 | | | | | 420 | 400 | 3.49 |
| (-3.3 ft) | lb | 2190 | 1990 | 1520 | 1410 | 1150 | 1080 | | | | | 930 | 880 | (11.4) |
| -1.5 m | kg | 1010 | 920 | 700 | 650 | 530 | 500 | | | | | 530 | 500 | 3.01 |
| (-4.9 ft) | lb | 2220 | 2020 | 1530 | 1430 | 1170 | 1100 | | | | | 1160 | 1100 | (9.9) |
| -2.0 m | kg | *990 | *900 | | | | | | | | | *750 | *750 | 2.21 |
| (-6.6 ft) | lb | *1990 | *1990 | | | | | | | | | *1650 | *1650 | (7.2) |

1. Lifting capacity are based on ISO 10567.
2. Lifting capacity of the Robex Series does not exceed 75% of the tipping load with the machine on firm, level ground or 87% of full hydraulic capacity.
3. The Lift- point is a bucket pivot mounting pin on the arm (without bucket mass).
4. (*) indicates the load limited by hydraulic capacity.